Signature Not Verified
Digitally signed by AVINASH KUMAR
Date: 2026.06.09 17:29:49 IST
Reason: IREPS Document
Location: IREPS-CRIS

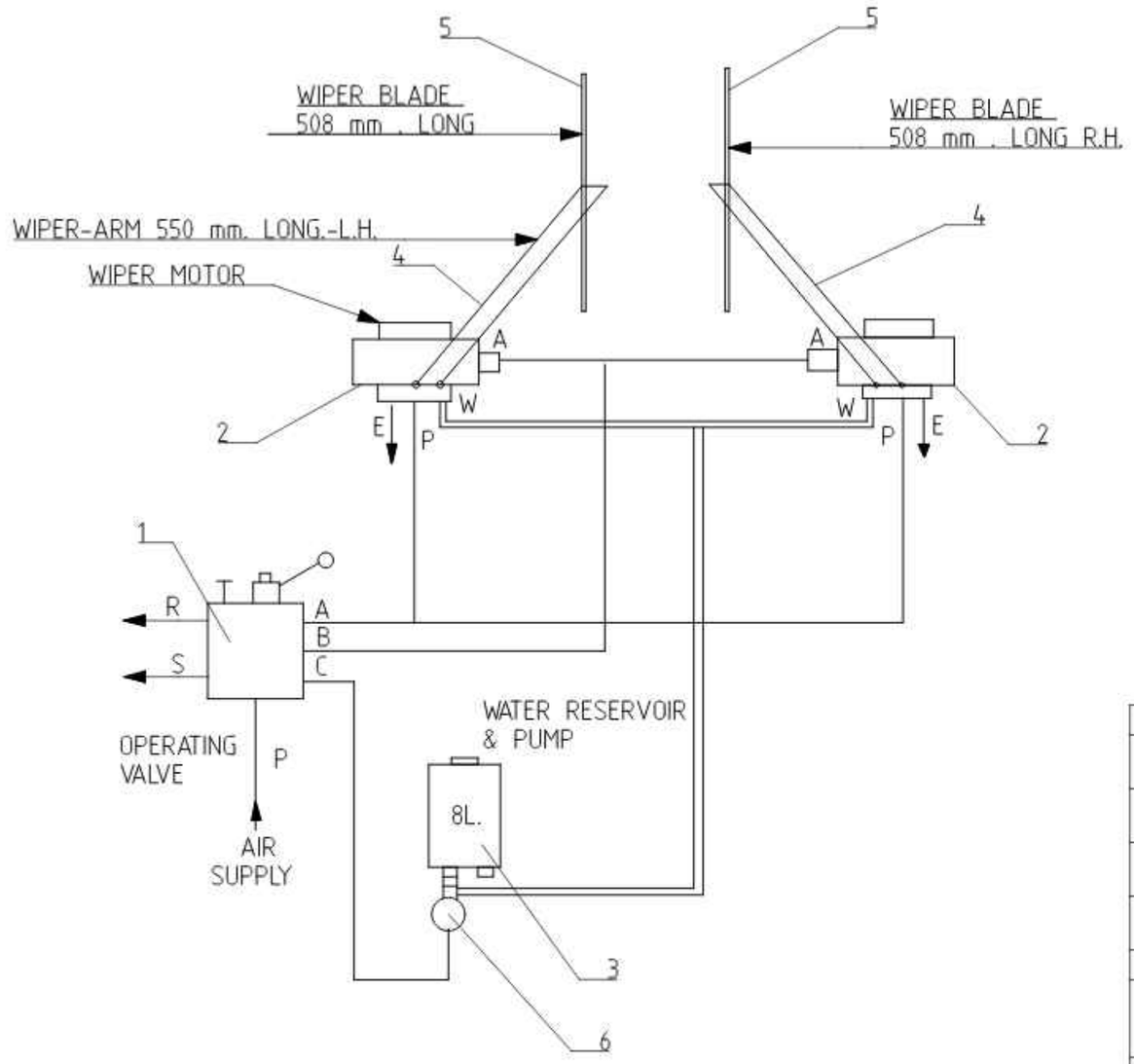

WIPER PORTS
P=SUPPLY
E=EXHAUST
A=PARKING
W=WATER

OPERATING VALVE PORTS
P=SUPPLY
A=WIPER SUPPLY
B=PARKING
C=PUMP
R& S=EXHAUST

REF. NO.	C&D NO.	PART DRG. NO.	DESCRIPTION	QTY.	MATL	SPECN	WT. EACH IN K.G.
6		1209-07.406-023	WATER PUMP (COMPLETE)	2	-	-	-
5		1209-07.306-022	FLEXIBLE WIPER BLADE ASSLY. (STAINLESS) 508 Lg.	4	-	-	-
4		1209-07.306-021	WIPER ARM COMPLETE 550 Lg.	2 L.H 2 R.H	-	-	-
3		1209-07.306-020	WATER RESERVOIR ASSLY. 8 LTS. CAPACITY	2	-	-	-
2		1209-07.306-019	WIPER MOTOR W16/60-W-P COMPLETE	2 L.H 2 R.H	-	-	-
1		1209-07.306-018	OPERATING VALVE NO. 12	2	-	-	-
			SCHEMATIC DIAGRAM OF WIPER ASSLY. COMPLETE WITH MOTOR				

निर्देश संख्या / REF. NO. | लागत एवं वितरण संख्या / C&D NO. | अंग आरेखण संख्या / PART DRG. NO. | वर्णन / DESCRIPTION | मात्रा / QTY. | पदार्थ / MATL | विशिष्टि / SPECN | प्रति भार कि. ग्रा. / WT. EACH IN K.G.

अभिकल्पित DGN		
जाँचा व.अ.अ. CHD SSE	SANJAY KUMAR DMS	2023.05.23 18:44:21 +05'30'
समीक्षित व.वि.अ. / व.वि.अ. REVIEWED AEE / SEE	CHANDRA N KUMAR	Deputy Chief Electrical Engineer Sou.Devan.Jr 05.05.2023
अनुमोदित उ.मु.वि.अ. APPROVED DYCEE	ANSHIJ KUMAR VERMA	2023.05.24 14:49:26 +05'30'
दिनांक DATE		
रैखिक अनुपात SCALE	N.T.S	
संदर्भ / REF.	ALI-	

चित्तरंजन रेलइंजन कारखाना
CHITTARANJAN LOCOMOTIVE WORKS, INDIA

पदार्थ MATL | प्रति भार कि. ग्रा. WT. EACH IN KG
विशिष्टि SPECN
वर्णन DESCRIPTION: SCHEMATIC DIAGRAM OF WIPER-ASSEMBLY COMPLETE WITH MOTOR
आरेखण संख्या DRAWING NO.: 1209-07.303-010
परिवर्तन संख्या ALTERATION NO. | पृष्ठ SHEET OF | A3

धातु–वेल्डन चिन्ह
भा. मा. : 813 / अ. मा. सं. :2553
WELDING SYMBOLS TO IS:813 / ISO:2553

सतह – रुक्षता का मान
भा. मा. 3073 / अ. मा. सं. 1302
SURFACE ROUGHNESS VALUE TO IS:3073 / ISO:1302

अनिर्दिष्ट सह – सीमा भा. मा. : 2102 / अ. मा. सं. : 2768
UNSPECIFIED TOLEARANCE TO IS : 2102 / ISO : 2768

ग्रेड GRADE NO.	सं1 N1	सं2 N2	सं3 N3	सं4 N4	सं5 N5	सं6 N6	सं7 N7	सं8 N8	सं9 N9	सं10 N10	सं11 N11	सं12 N12
Rz	0.16-0.3	0.5-0.7	0.8-1.1	1.5-2.0	2.5-3.0	5.0-6.3	9.0-12	16-25	30-40	50-63	75-100	100-250
Ra µm	0.025	0.05	0.1	0.2	0.4	0.8	1.6	3.2	6.3	12.5	25	50
चिन्ह SYMBOL												

TOL. CLS.

परिवर्तन संख्या ALT. NO.	प्राधिकार AUTHY	वर्णन DESCRIPTION	दिनांकित आद्याक्षर DATED INITIAL

This document/drawing was prepared by or on behalf of CLW and the copyright belongs to CLW. Reproduction in whole or in part requires prior written consent of CLW. Its disclosure to third parties also requires CLW's prior written consent.

5128877/2026/O/o DY.CEE/D-II

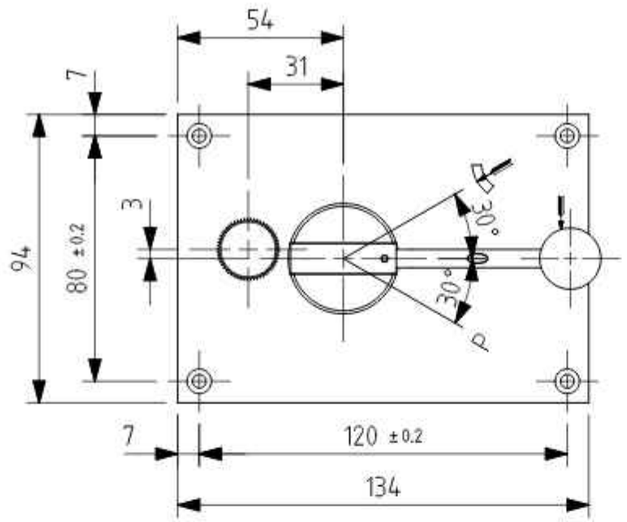

LEVER POSITION

O = OFF
P = PARK POSITION
= WIPING

SWITCHING SCHEME

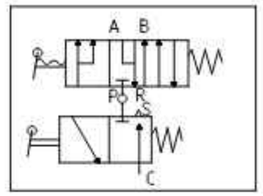

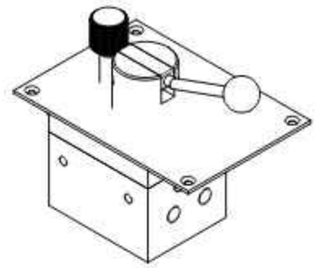

A = SERVICE PIPE (TO WIPER PROPULSION)
B = SERVICE PIPE (TO PARK POSITION)
C = SERVICE PIPE (TO WASH SYSTEM)
} CONNECTION M10 x 1-10 DEEP
P = AIR SUPPLY CONNECTION
R = VENT
S = VENT
} DO NOT COMBINE VENTPIPES.
SERVICE PRESSURE : MAX.10 BAR(AIR)
PASSAGE : Ø 3
AMBIENT TEMPERATURE : -20°C TO +70°C

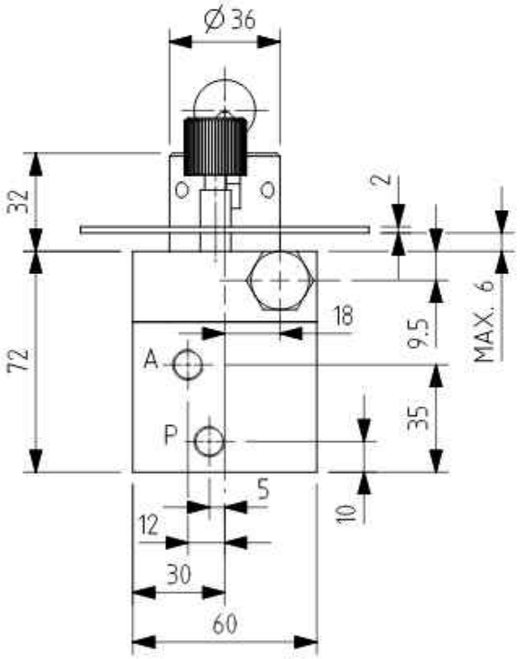

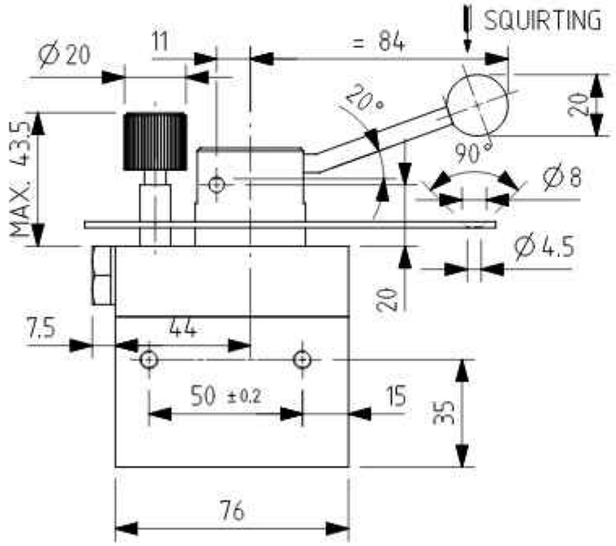

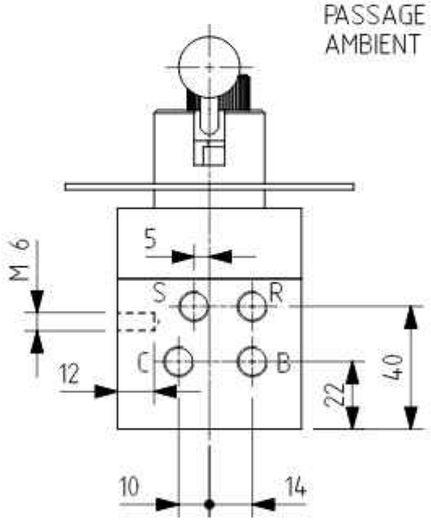

धातु–वेल्डन चिन्ह भा. मा. : 813 / अ. मा. सं. :2553 WELDING SYMBOLS TO IS:813 / ISO:2553	अनिर्दिष्ट सह्य – सीमा भा. मा. : 2102 / अ. मा. सं. : 2768 UNSPECIFIED TOLERANCE TO IS : 2102 / ISO : 2768												TOL. CLS.
सतह – खुरदरा का मान भा. मा. 3073 / अ. मा. सं. 1302 SURFACE ROUGHNESS VALUE TO IS:3073 / ISO:1302	प्रदर्शक GRADE NO.	सं1 N1	सं2 N2	सं3 N3	सं4 N4	सं5 N5	सं6 N6	सं7 N7	सं8 N8	सं9 N9	सं10 N10	सं11 N11	सं12 N12
	Rz	0.16-0.3	0.5-0.7	0.9-1.1	1.5-2.0	2.5-3.0	5.0-6.3	9.0-12	16-25	30-40	50-63	75-100	100-250
	Ra µm	0.025	0.05	0.1	0.2	0.4	0.8	1.6	3.2	6.3	12.5	25	50
	चिन्ह SYMBOL												

परिवर्तन संख्या ALT. NO.	प्राधिकार AUTHY	वर्णन DESCRIPTION	दिनांकित आद्याक्षर DATED INITIAL

अधिकल्पित DGM		
जोन्ना व.अ.अ. CHD SSE	SANJAY KUMAR DAS 2023.05.23 18:44:44 +05'30'	
समीक्षित स.वि.अ. / व.वि.अ. REVIEWED AEE / SEE	CHANDAN KUMAR	
अनुमोदित उ.मु.वि.अ. APPROVED DYCEE	ANSHU KUMAR VERMA 2023.05.24 14:50:26 +05'30'	
दिनांक DATE	23-06-10	
रैखिक अनुपात SCALE	1:2	
संदर्भ / REF.	IA086-00416 ALT- 0	

चित्तरंजन रेलइंजन कारखाना
CHITTARANJAN LOCOMOTIVE WORKS, INDIA

पदार्थ MATL	प्रति भार कि. ग्रा. WT. EACH IN KG
विशिष्टि SPECN	-
वर्णन DESCRIPTION	Operating Valve No 12
आरेखण संख्या DRAWING NO.	1209-07.303-018
परिवर्तन संख्या ALTERATION NO.	पर्ण SHEET 1 OF 1 — A3

This document/drawing was produced by or on behalf of CLW and the copyright belongs to CLW. Reproduction in whole or in part requires prior written consent of CLW. As the drawing incorporates confidential information of CLW its disclosure to third parties also requires CLW's prior written consent.

REDRAWN BY COE

5128877/2026/O/o DY.CEE/D-II

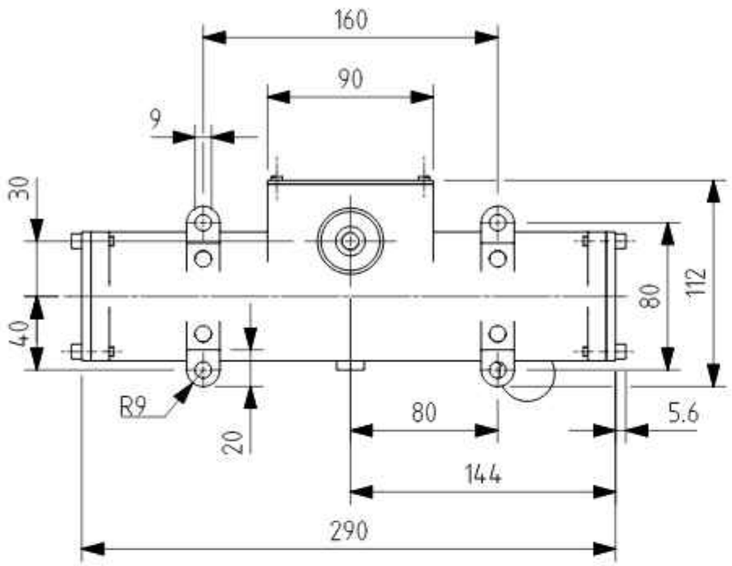

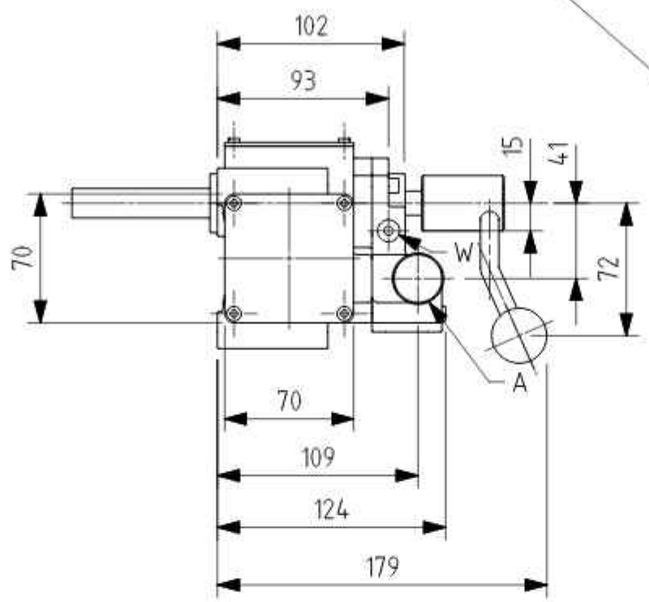

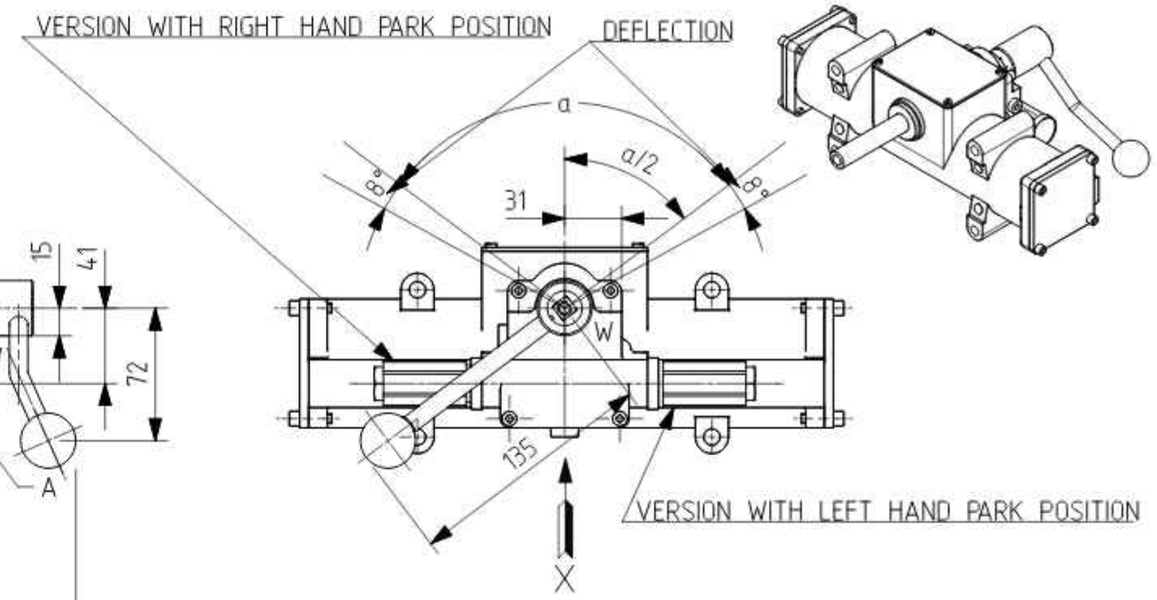

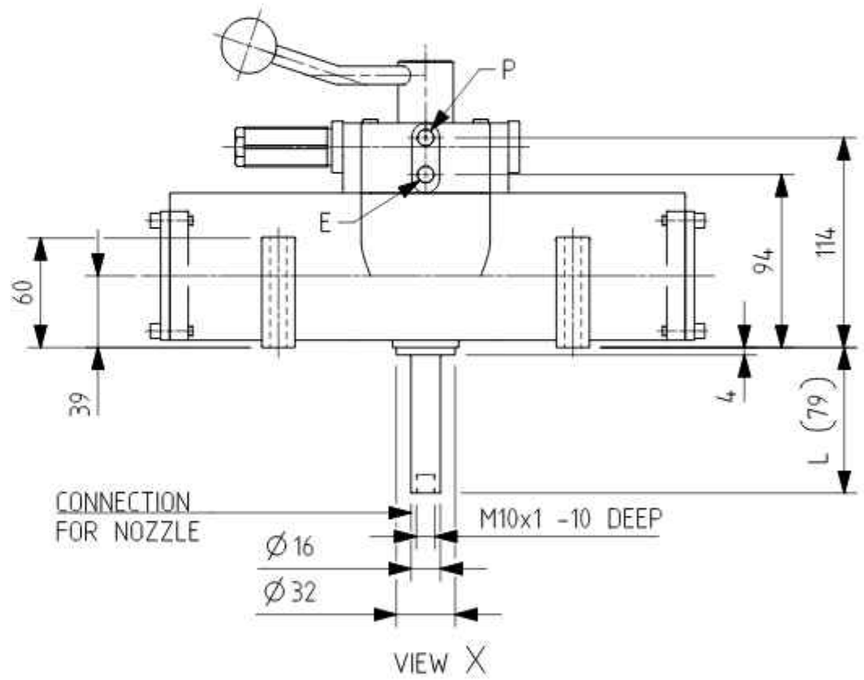

TECHNICAL DATA:

MAX. SERVICE PRESSURE - 10 BAR

STROKES - BETWEEN 35 AND 55 STROKES/min.

WIPING ANGLE - TO BE SELECTED BETWEEN 50° AND 120°

LOCKED SHAFT TORQUE - AT 10 BAR 84Nm.

PARTS:-

A: PARKING
E: EXHAUST
P: AIR SUPPLY
W: WATER (R.H OR L.H)
} M10x1.8mm DEEP

ITEM	ABB PART NO.	KNORR PART NO.	REMARKS
01	IA086-00417-001	I 93286/2280 LH	65° ARC, 80 LG. SHAFT.
02	IA086-00417-002	I 93286/2280 RH	65° ARC, 80 LG. SHAFT.

SLNO.	PART NO.	DENOMINATION	VERSION
01	I/93286/	WIPER MOTOR W 16/60-W-P	PARK POSITION R.H.
02	I/99613/	WIPER MOTOR W 16/60-W-P	PARK POSITION L.H.

QTY./ LOCO	2 L.H, 2 R.H.

धातु–वेल्डन चिन्ह
भा. मा. : 813 / अ. मा. सं. :2553
WELDING SYMBOLS TO IS:813 / ISO:2553

सतह – खुरदरा का मान
भा. मा. 3073 / अ. मा. सं. 1302
SURFACE ROUGHNESS VALUE TO IS:3073 / ISO:1302

अनिर्दिष्ट सह्य – सीमा भा. मा. : 2102 / अ. मा. सं. : 2768
UNSPECIFIED TOLERANCE TO IS : 2102 / ISO : 2768

ग्रेड GRADE NO.	सं1 N1	सं2 N2	सं3 N3	सं4 N4	सं5 N5	सं6 N6	सं7 N7	सं8 N8	सं9 N9	सं10 N10	सं11 N11	सं12 N12	TOL. CLS.
Rz	0.16-0.3	0.5-0.7	0.9-1.1	1.5-2.0	2.5-3.0	5.0-6.3	9.0-12	16-25	30-40	50-63	75-100	100-250	
Ra µm	0.025	0.05	0.1	0.2	0.4	0.8	1.6	3.2	6.3	12.5	25	50	
चिन्ह SYMBOL													

परिवर्तन संख्या ALT. NO.	प्राधिकार AUTHY	वर्णन DESCRIPTION	दिनांकित आद्याक्षर DATED INITIAL
1		REDRAWN IN NX WITH 3RD ANGLE PROJECTION	15-06-19

अधिकल्पित DGN		
जाँचा च.अ.अ. CHD SSE	MANOJ KUMAR SAGAR	
समीक्षित स.वि.अ. / च.वि.अ. REVIEWED AEE / SEE	Pradeep Khatana	
अनुमोदित उ.मु.वि.अ. APPROVED DYCEE	SYAMA PRASAD PATRA	
दिनांक DATE	17-08-21	
रैखिक अनुपात SCALE	1:1	
संदर्भ / REF.	IA086-00417 ALT- 3	

चित्तरंजन रेलइंजन कारखाना
CHITTARANJAN LOCOMOTIVE WORKS, INDIA

पदार्थ MATL

प्रति भार कि. ग्रा. WT. EACH IN KG

विशिष्ट SPECN

वर्णन DESCRIPTION: WIPER MOTOR W16/60-W-P COMPLETE

आरेखण संख्या DRAWING NO. 1209-07.303-019

परिवर्तन संख्या ALTERATION NO. 1 | पृष्ठ SHEET 1 OF 1 | A3

This document/drawing was prepared by or on behalf of CLW and the copyright belongs to CLW. Reproduction in whole or in part requires prior written consent of CLW. As the drawing incorporates confidential information of CLW its disclosure to third parties also requires CLW's prior written consent.

REDRAWN BY TCS

5128877/2026/O/o DY.CEE/D-II

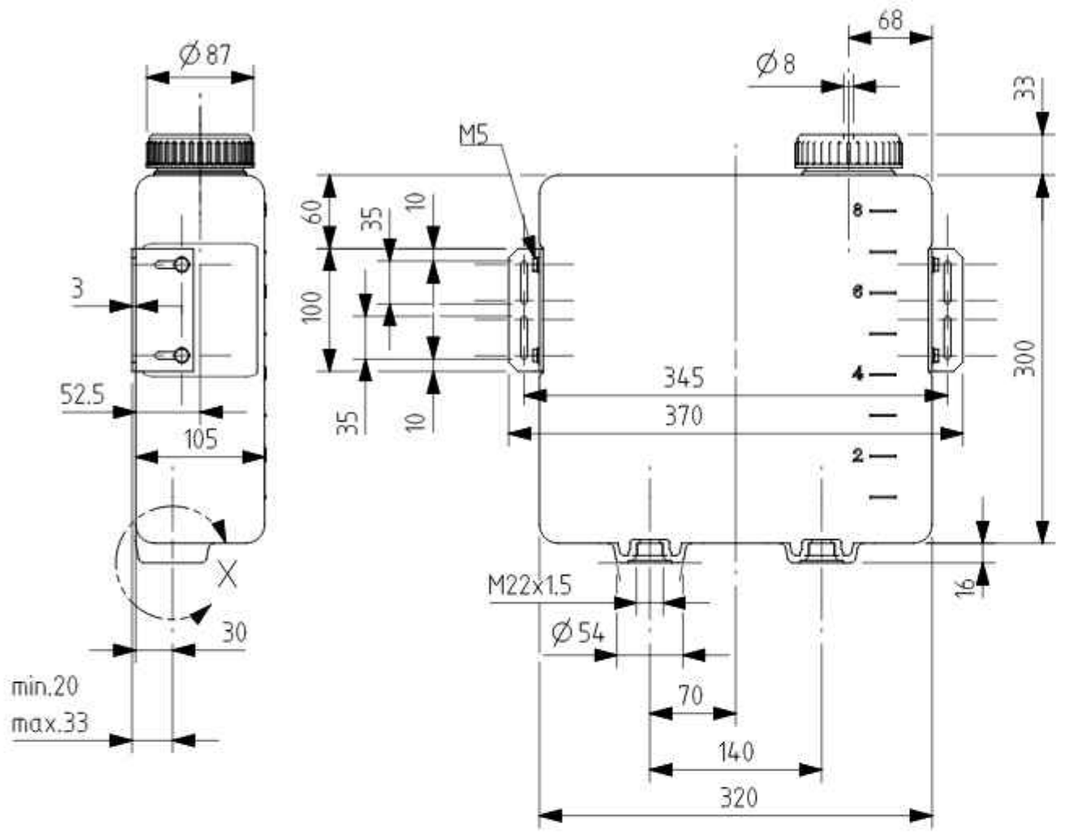

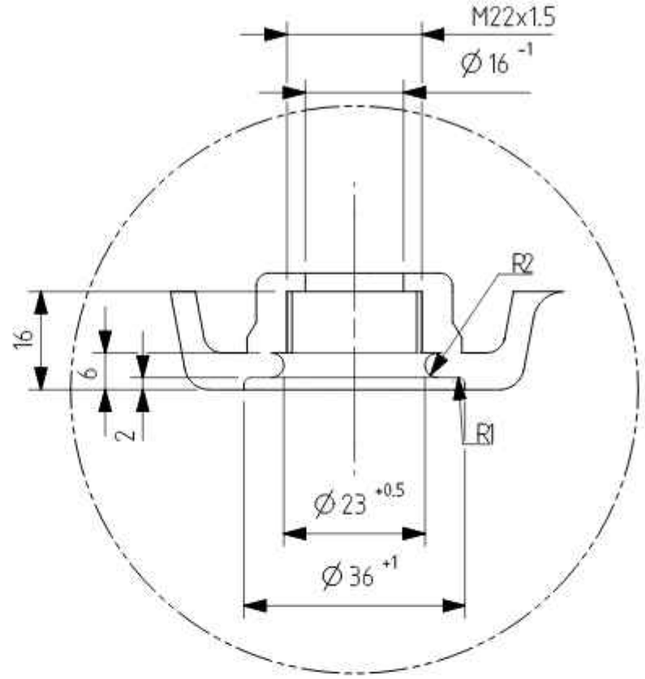

DETAIL X
SCALE 1:1

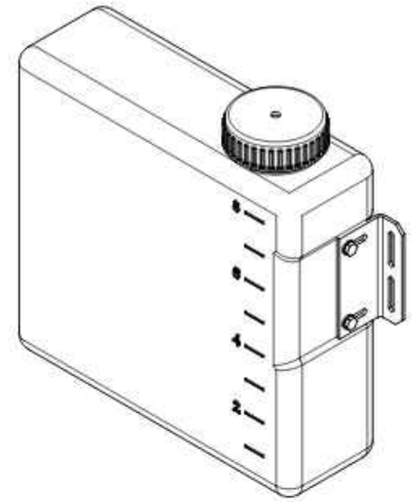

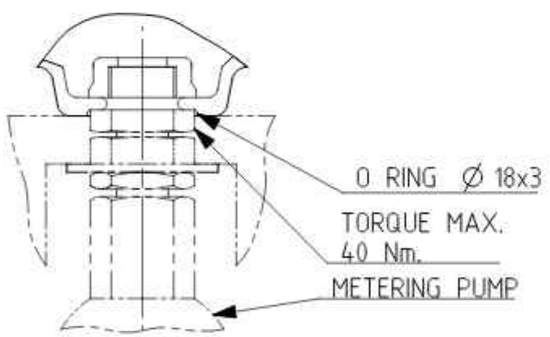

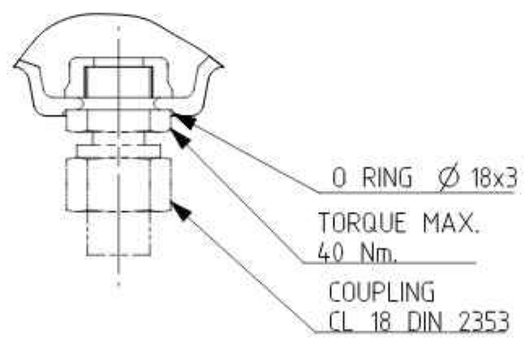

VERSION OF CONNECTION

VOLUME : Ca 8 LITRES,
MAX. AMBIENT TEMP. -20°C TO +70°C
WEIGHT-1.6 KG
MODEL-POLYATHYLEN

धातु–वेल्डन चिन्ह भा. मा. : 813 / अ. मा. सं. :2553 WELDING SYMBOLS TO IS:813 / ISO:2553	अनिर्दिष्ट सह्य – सीमा भा. मा. : 2102 / अ. मा. सं. : 2768 UNSPECIFIED TOLERANCE TO IS : 2102 / ISO : 2768												TOL. CLS.
	पदार्थ GRADE NO.	सं1 N1	सं2 N2	सं3 N3	सं4 N4	सं5 N5	सं6 N6	सं7 N7	सं8 N8	सं9 N9	सं10 N10	सं11 N11	सं12 N12
सतह – रुक्षता का मान भा. मा. 3073 / अ. मा. सं. 1302 SURFACE ROUGHNESS VALUE TO IS:3073 / ISO:1302	Rz	0.16-0.3	0.5-0.7	0.8-1.1	1.5-2.0	2.5-3.0	5.0-6.3	9.0-12	16-25	30-40	50-63	75-100	160-250
	Ra µm	0.025	0.05	0.1	0.2	0.4	0.8	1.6	3.2	6.3	12.5	25	50
	चिन्ह SYMBOL												

परिवर्तन संख्या ALT. NO.	प्राधिकार AUTHY	वर्णन DESCRIPTION	विनांकित आद्याक्षर DATED INITIAL
0			

अधिकल्पित DGN		
जाँचा व.अ.अ. CHD SSE	SANJAY KUMAR DAS 2023.05.23 10:45:10 +05'30'	
समीक्षित स.वि.अ. / व.वि.अ. REVIEWED AEE / SEE	CHANDAN KUMAR	
अनुमोदित उ.मु.वि.अ. APPROVED DYCEE	ANSHU KUMAR VERMA 2023.05.23 14:52:17 +05'30'	
दिनांक DATE	25-06-2010	
रैखिक अनुपात SCALE	1:1	
संदर्भ / REF.	IA086-00421 ALT- 0	

चित्तरंजन रेलइंजन कारखाना
CHITTARANJAN LOCOMOTIVE WORKS, INDIA

पदार्थ MATL	POLYATHYLEN	प्रति भार कि. ग्रा. WT. EACH IN KG	1.6
विशिष्ट SPECN			
वर्णन DESCRIPTION	Water Resorvoir Assy (8 Ltr Capasity)		
आरेखण संख्या DRAWING NO.	1209-07.303-020		
परिवर्तन संख्या ALTERATION NO.	0	पृष्ठ SHEET	1 OF 1
A3			

This document/drawing was prepared by or on behalf of CLW and the copyright belongs to CLW. Reproduction in whole or in part requires prior written consent of CLW. As the drawing incorporates confidential information of CLW its disclosure to third parties also requires CLW's prior written consent.

REDRAWN BY COE

5128877/2026/O/o DY.CEE/D-II

REMOVE ALL BURRS & SHARP EDGES

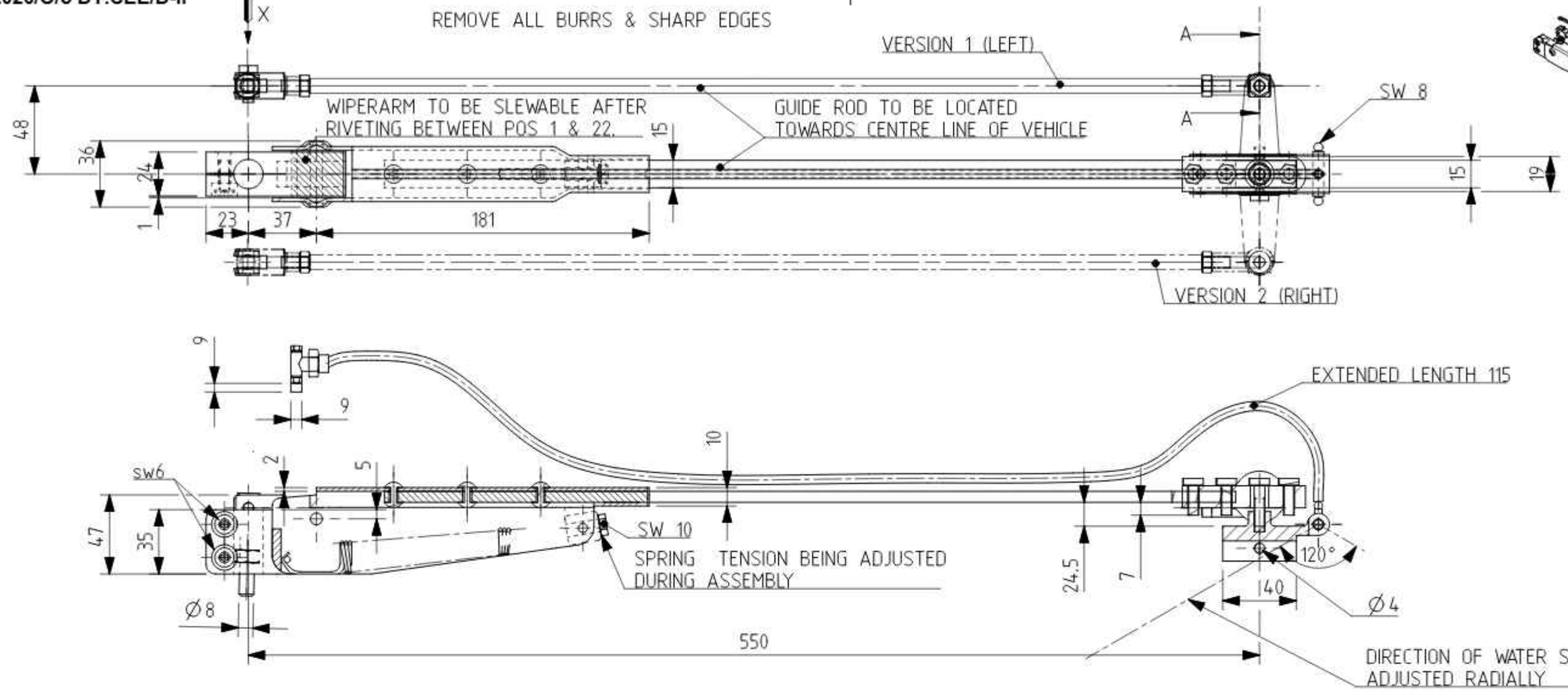

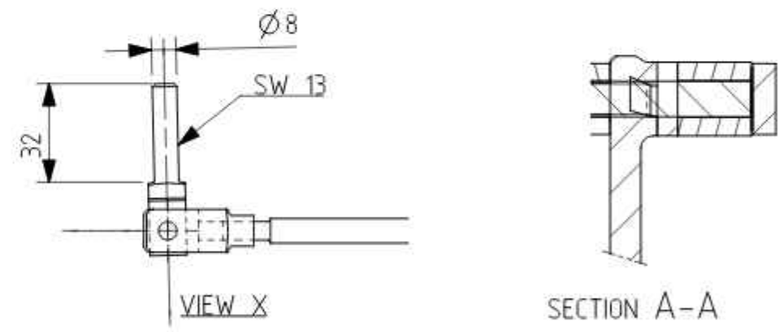

WIPER BLADE TO BE USED
1. WITH SURFACE PROTECTION 2853525-I/ 75061/.....

2. STAINLESS, WIPER BLADE TO BE REPLACABLE 2B53524- I/75060/.....

RADIUS OF WIPEARM r:300 TO 800
(50 mm PER STEP; SPECIAL LENGTH POSSIBLE)

QTY./ LOCO.	2 LH, 2 RH

अधिकल्पित DGN	
जाँचा च.अ.अ. CHD SSE	SUBHAN KAR KUMBHA KAR
समीक्षित स.वि.अ. / च.वि.अ. REVIEWED AEE / SEE	Pradeep Bhatana
अनुमोदित उ.मु.वि.अ. APPROVED DYCEE	SYAMA PRASAD PATRA
दिनांक DATE	17-08-21
रैखिक अनुपात SCALE	1:2.5
संदर्भ / REF.	IA086-00418 ALT- 2

चित्तरंजन रेलइंजन कारखाना
CHITTARANJAN LOCOMOTIVE WORKS, INDIA

पदार्थ MATL	प्रति भार कि. ग्रा. WT. EACH IN KG
विशिष्टि SPECN	
वर्णन DESCRIPTION	WIPER ARM COMPLETE 550 LG
आरेखण संख्या DRAWING NO.	1209-07.303-021
परिवर्तन संख्या ALTERATION NO. 1	पृष्ठ SHEET 1 OF 1 — A3

धातु–वेल्डन चिन्ह
भा. मा. : 813 / अ. मा. सं. :2553
WELDING SYMBOLS TO IS:813 / ISO:2553

सतह – रुक्षता का मान
भा. मा. 3073 / अ. मा. सं. 1302
SURFACE ROUGHNESS VALUE TO IS:3073 / ISO:1302

अनिर्दिष्ट सह्य – सीमा भा. मा. : 2102 / अ. मा. सं. : 2768
UNSPECIFIED TOLEARANCE TO IS : 2102 / ISO : 2768

ग्रेड GRADE NO.	सं1 N1	सं2 N2	सं3 N3	सं4 N4	सं5 N5	सं6 N6	सं7 N7	सं8 N8	सं9 N9	सं10 N10	सं11 N11	सं12 N12
Rz	0.10-0.3	0.5-0.7	0.9-1.1	1.5-2.0	2.5-3.0	5.0-6.3	9.0-12	16-25	30-40	50-63	75-100	100-250
Ra µm	0.025	0.05	0.1	0.2	0.4	0.8	1.6	3.2	6.3	12.5	25	50
चिन्ह SYMBOL												

TOL. CLS.

परिवर्तन संख्या ALT. NO.	प्राधिकार AUTHY	वर्णन DESCRIPTION	दिनांकित आद्याक्षर DATED INITIAL
1		REDRAWN IN NX WITH 3RD ANGLE PROJECTION	22-07-21

REDRAWN BY TCS

This document/drawing was produced by or on behalf of CLW and the copyright belongs to CLW. Reproduction in whole or in part requires prior written consent of CLW. As the drawing incorporates confidential information of CLW its disclosure to third parties also requires CLW's prior written consent.

5128877/2026/O/o DY.CEE/D-II

REMOVE ALL BURRS & SHARP EDGES

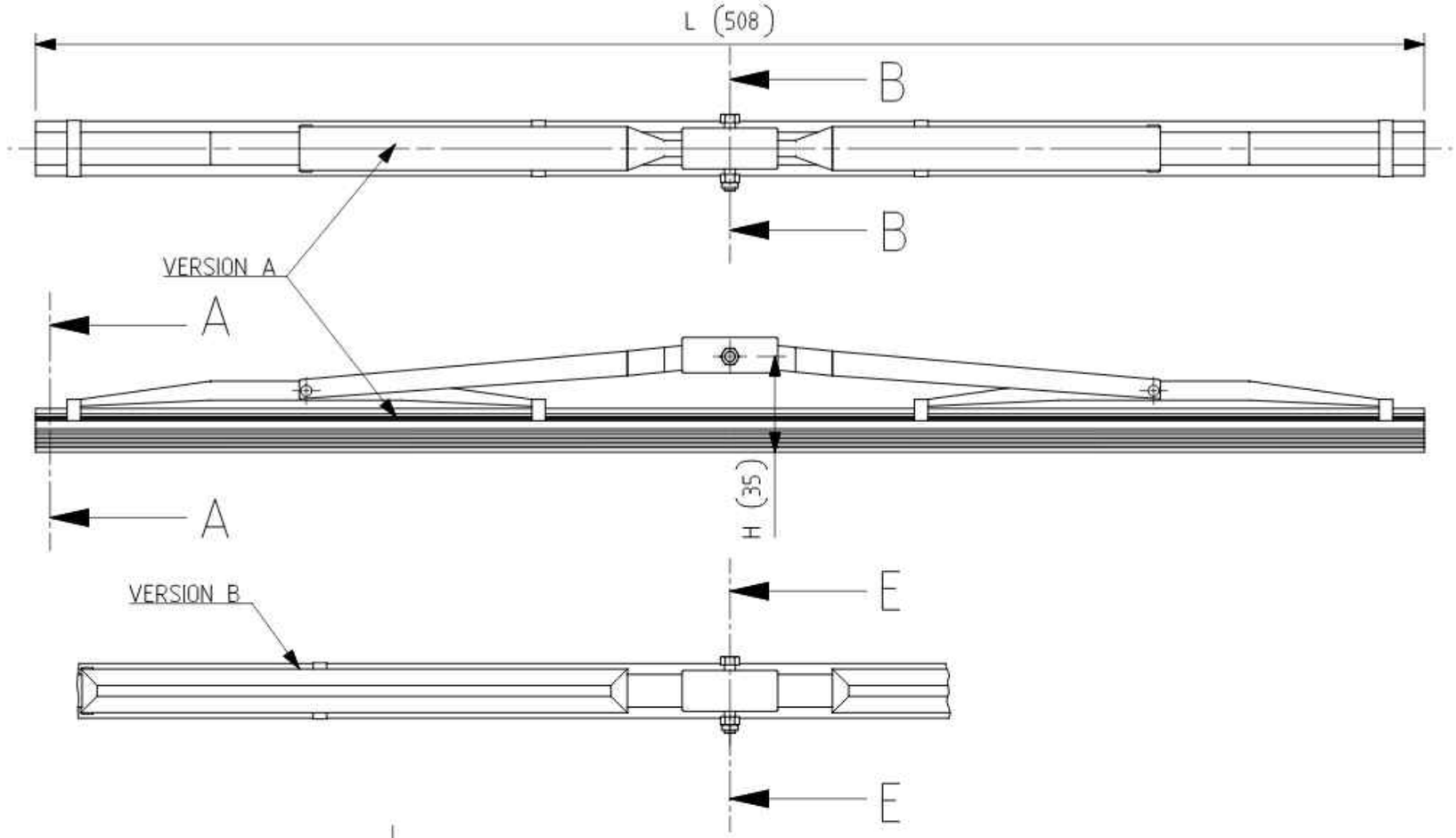

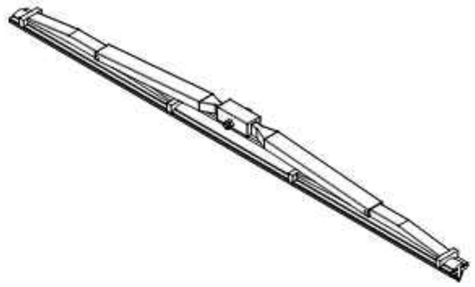

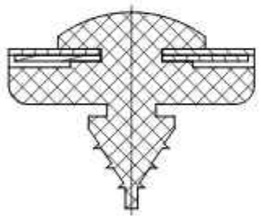

SECTION A-A
SCALE 2:1

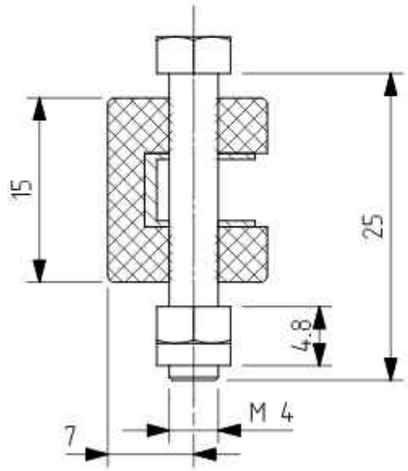

SECTION B-B
SCALE 2:1

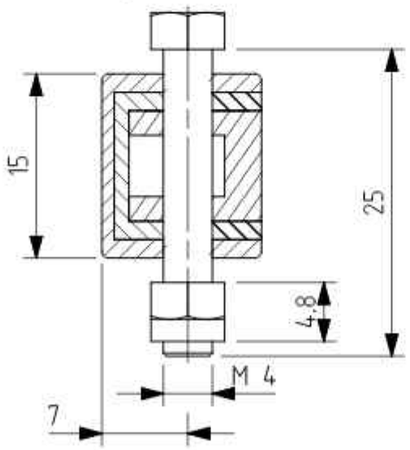

SECTION E-E
SCALE 2:1

USED FOR LOCO WAG-9 & WAP-5

REF. NO.	PART DRG. NO.	DESCRIPTION	NO./LOCO	MATL	SPECN	WT. EACH IN K.G.
		FLEXIBLE WIPER BLADE ASSEMBLY (STAINLESS) 508 Lg.	4			

अधिकल्पित DGN		
जोधा व.अ.अ. CHD SSE	SUBHANKAR KUMBHANI	
समीक्षित स.वि.अ. / व.वि.अ. REVIEWED AEE / SEE	Pradeep Khatana	
अनुमोदित उ.मु.वि.अ. APPROVED DYCEE	SYAMA PRASAD PATRA	
दिनांक DATE	10-03-21	
रैखिक अनुपात SCALE	1:2	
संदर्भ / REF.	IA086-00420 ALT- 2	

चित्तरंजन रेलइंजन कारखाना
CHITTARANJAN LOCOMOTIVE WORKS, INDIA

पदार्थ MATL | प्रति भार कि. ग्रा. WT. EACH IN KG

विशिष्ट SPECN

वर्णन DESCRIPTION: FLEXIBLE WIPER BLADE ASSEMBLY (STAINLESS) 508 Lg.

आरेखण संख्या DRAWING NO.: 1209-07.303-022

परिवर्तन संख्या ALTERATION NO. 1 | पृष्ठ SHEET 1 OF 1 | A3

धातु-वेल्डन चिन्ह
भा. मा. : 813 / अ. मा. सं. :2553
WELDING SYMBOLS TO IS:813 / ISO:2553

सतह – खुरदरा का मान
भा. मा. 3073 / अ. मा. सं. 1302
SURFACE ROUGHNESS VALUE TO IS:3073 / ISO:1302

अनिर्दिष्ट सह्य – सीमा भा. मा. : 2102 / अ. मा. सं. : 2768
UNSPECIFIED TOLEARANCE TO IS : 2102 / ISO : 2768

ग्रेड GRADE NO.	सं1 N1	सं2 N2	सं3 N3	सं4 N4	सं5 N5	सं6 N6	सं7 N7	सं8 N8	सं9 N9	सं10 N10	सं11 N11	सं12 N12
Rz	0.16-0.3	0.5-0.7	0.9-1.1	1.5-2.0	2.5-3.0	5.0-6.3	9.0-12	16-25	30-40	50-63	75-100	100-250
Ra µm	0.025	0.05	0.1	0.2	0.4	0.8	1.6	3.2	6.3	12.5	25	50
चिन्ह SYMBOL												

TOL. CLS.

परिवर्तन संख्या ALT. NO.	प्राधिकार AUTHY	वर्णन DESCRIPTION	दिनांकित आद्याक्षर DATED INITIAL
1		REDRAWN IN NX WITH 3RD ANGLE PROJECTION	28-06-19

This document/drawing was produced by or on behalf of CLW and the copyright belongs to CLW. Reproduction in whole or in part requires prior written consent of CLW. As the drawing incorporates confidential information of CLW its disclosure to third parties also requires CLW's prior written consent.

REDRAWN BY TCS

5128877/2026/O/o DY.CEE/D-II

REMOVE ALL BURRS & SHARP EDGES

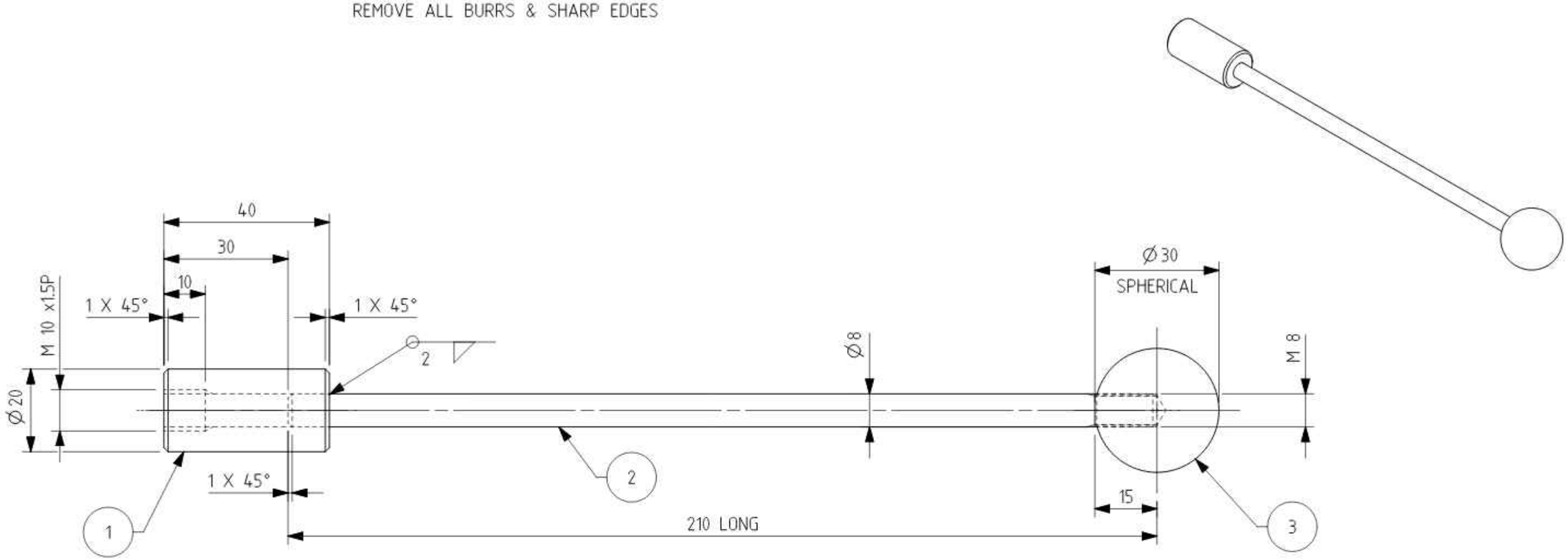

FINISH - TO BE ZINC PLATED

USED FOR LOCO- WAG-9

REF. NO.	C&D NO.	PART DRG. NO.	DESCRIPTION	QTY./ LOCO	MATL	SPECN	WT. EACH IN K.G.
3	/	1209-07.303-028-002	LEVER KNOB	2	PLASTIC		
2	/	1209-07.403-042	LEVER ROD REMOVEABLE	2	STEEL	IS: 2062 GR. C	
1	/	1209-07.403-041	LEVER CONNECTOR	2	STEEL	IS: 2062 GR. C	0.2

अधिकारित DGN		चित्तरंजन रेलइंजन कारखाना CHITTARANJAN LOCOMOTIVE WORKS, INDIA	
जीवा व.अ.अ. CHD SSE	ALOKE KUMAR CHAKRABORTY	पदार्थ MATL	प्रति भार कि. ग्रा. WT. EACH IN KG
समीक्षित स.वि.अ. / व.वि.अ. REVIEWED AEE / SEE	Pradeep Khatana	विशिष्ट SPECN	
अनुमोदित उ.मु.वि.अ. APPROVED DYCEE	SYAMA PRASAD PATRA	वर्णन DESCRIPTION	LEVER EXTENSION ASSEMBLY (WIPER INSTALLATION)
दिनांक DATE	14-08-21		
रैखिक अनुपात SCALE	1:1	आरेखण संख्या DRAWING NO.	1209-07.303-027
संदर्भ / REF.	IA086-00504 ALT- 2	परिवर्तन संख्या ALTERATION NO. 1	पृष्ठ SHEET 1 OF 1 — A3

धातु–वेल्डन चिन्ह
भा. मा. : 813 / अ. मा. सं. :2553
WELDING SYMBOLS TO IS:813 / ISO:2553

सतह – रुक्षता का मान
भा. मा. 3073 / अ. मा. सं. 1302
SURFACE ROUGHNESS VALUE TO IS:3073 / ISO:1302

अनिर्दिष्ट सह्य – सीमा भा. मा. : 2102 / अ. मा. सं. : 2768
UNSPECIFIED TOLEARANCE TO IS : 2102 / ISO : 2768

पदांक GRADE NO.	सं1 H1	सं2 H2	सं3 H3	सं4 H4	सं5 H5	सं6 H6	सं7 H7	सं8 H8	सं9 H9	सं10 H10	सं11 H11	सं12 H12
Rz	0.16-0.3	0.5-0.7	0.9-1.1	1.5-2.0	2.5-3.0	5.0-6.3	9.0-12	16-25	30-40	50-63	75-100	160-250
Ra µm	0.025	0.05	0.1	0.2	0.4	0.8	1.6	3.2	6.3	12.5	25	50
चिन्ह SYMBOL												

TOL. CLS.

परिवर्तन संख्या ALT. NO.	प्राधिकार AUTHY	वर्णन DESCRIPTION	दिनांकित आद्याक्षर DATED INITIAL
1		REDRAWN IN NX WITH 3RD ANGLE PROJECTION	11-06-20

REDRAWN BY TCS

This document/drawing was prepared by or on behalf of CLW and the copyright belongs to CLW. Reproduction in whole or in part requires prior written consent of CLW. As the drawing incorporates confidential information of CLW its disclosure to third parties also requires CLW's prior written consent.

5128877/2026/O/o DY.CEE/D-II

REMOVE ALL BURRS & SHARP EDGES

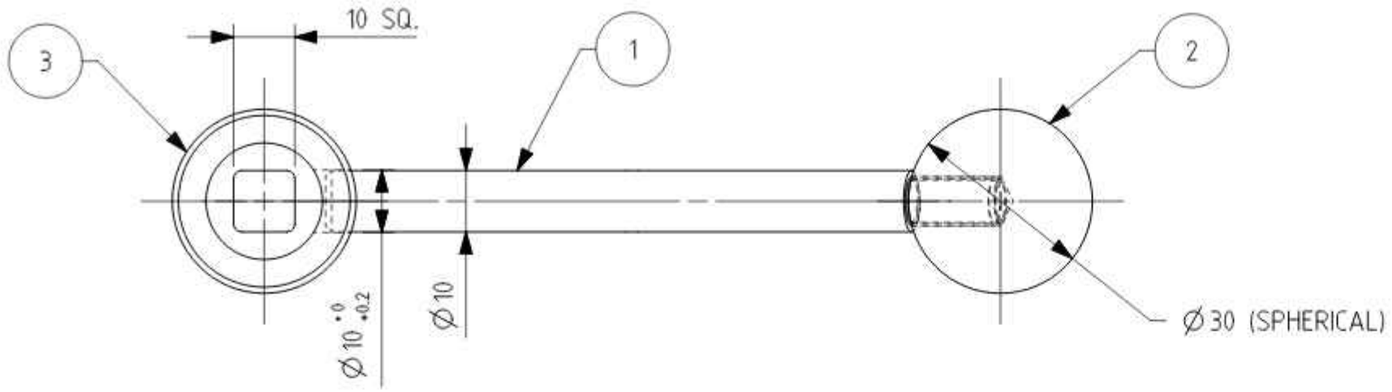

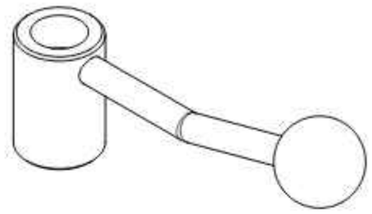

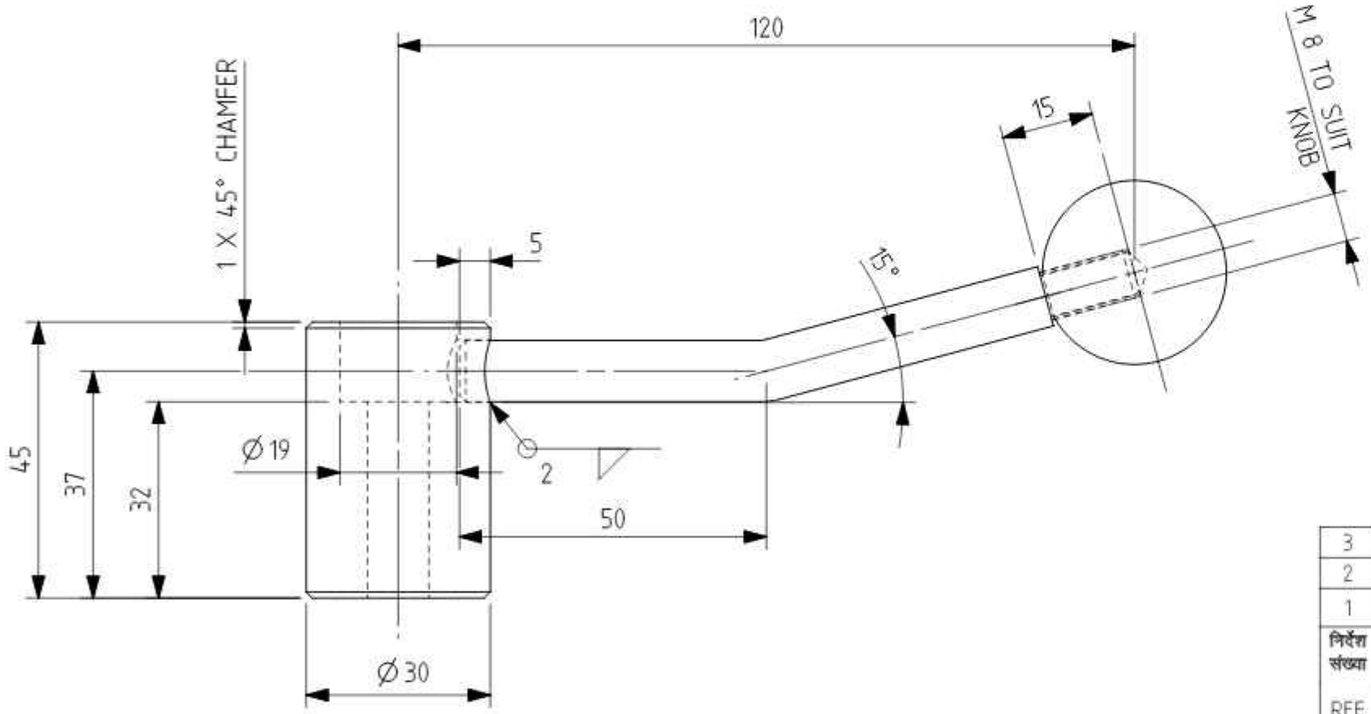

FINISH: TO BE Zn PLATED.

USED FOR LOCO: WAG-9 & WAP-5
QTY/LOCO: 2 NOS.

REF. NO. (निर्देश संख्या)	C&D NO. (लागत एवं वितरण संख्या)	PART DRG. NO. (अंग आरेखण संख्या)	DESCRIPTION (वर्णन)	QTY. (मात्रा)	MATL (पदार्थ)	SPECN (विशिष्टि)	WT. EACH IN K.G. (प्रति भार कि. ग्रा.)
3	/		Lever Boss	1	STEEL	IS: 2062 GR. C	0.17
2	/		Lever Knob	1	PLASTIC		0.03
1	/		Lever Rod Ø 10	1	STEEL	IS: 2062 GR. C	0.10

अभिकल्पित DGN		
जाँचा च.अ.अ. CHD SSE	SUBHAN KAR KUMBHA KAR	
समीक्षित स.वि.अ. / च.वि.अ. REVIEWED AEE / SEE	Pradeep Khatana	
अनुमोदित उ.मु.वि.अ. APPROVED DYCEE	SYAMA PRASAD PATRA	
दिनांक DATE	11-06-10	
पैमाना अनुपात SCALE	1:1	
संदर्भ / REF.	IA086-00088 ALT- 2	

चित्तरंजन रेलइंजन कारखाना
CHITTARANJAN LOCOMOTIVE WORKS, INDIA

पदार्थ MATL | प्रति भार कि. ग्रा. WT. EACH IN KG

विशिष्टि SPECN

वर्णन DESCRIPTION: LEVER FIXED ASSEMBLY (R.H.S.) (WIPER INSTALLATION)

आरेखण संख्या DRAWING NO.: 1209-07.303-028

परिवर्तन संख्या ALTERATION NO. 1 | पृष्ठ SHEET 1 OF 1 | A3

धातु–वेल्डन चिन्ह
भा. मा. : 813 / अ. मा. सं. :2553
WELDING SYMBOLS TO IS:813 / ISO:2553

सतह – खुरदरा का मान
भा. मा. 3073 / अ. मा. सं. 1302
SURFACE ROUGHNESS VALUE TO IS:3073 / ISO:1302

अनिर्दिष्ट सह्य – सीमा भा. मा. : 2102 / अ. मा. सं. : 2768
UNSPECIFIED TOLEARANCE TO IS : 2102 / ISO : 2768

पदांक GRADE NO.	सं1 H1	सं2 H2	सं3 H3	सं4 H4	सं5 H5	सं6 H6	सं7 H7	सं8 H8	सं9 H9	सं10 H10	सं11 H11	सं12 H12	TOL. CLS.
Rz	0.16-0.3	0.3-0.7	0.5-1.3	1.3-2.0	2.5-3.8	5.0-6.3	9.0-12	16-25	30-40	50-63	75-100	100-250	
Ra µm	0.025	0.05	0.1	0.2	0.4	0.8	1.6	3.2	6.3	12.5	25	50	
चिन्ह SYMBOL													

परिवर्तन संख्या ALT. NO.	प्राधिकार AUTHY	वर्णन DESCRIPTION	दिनांकित आद्याक्षर DATED INITIAL
1		REDRAWN IN NX WITH 3RD ANGLE PROJECTION	11-06-10

REDRAWN BY TCS

This document/drawing was produced by or on behalf of CLW and the copyright belongs to CLW. Reproduction in whole or in part requires prior written consent of CLW. The drawing incorporates confidential information of CLW. Its disclosure to third parties also requires CLW's prior written consent.

5128877/2026/O/o DY.CEE/D-II

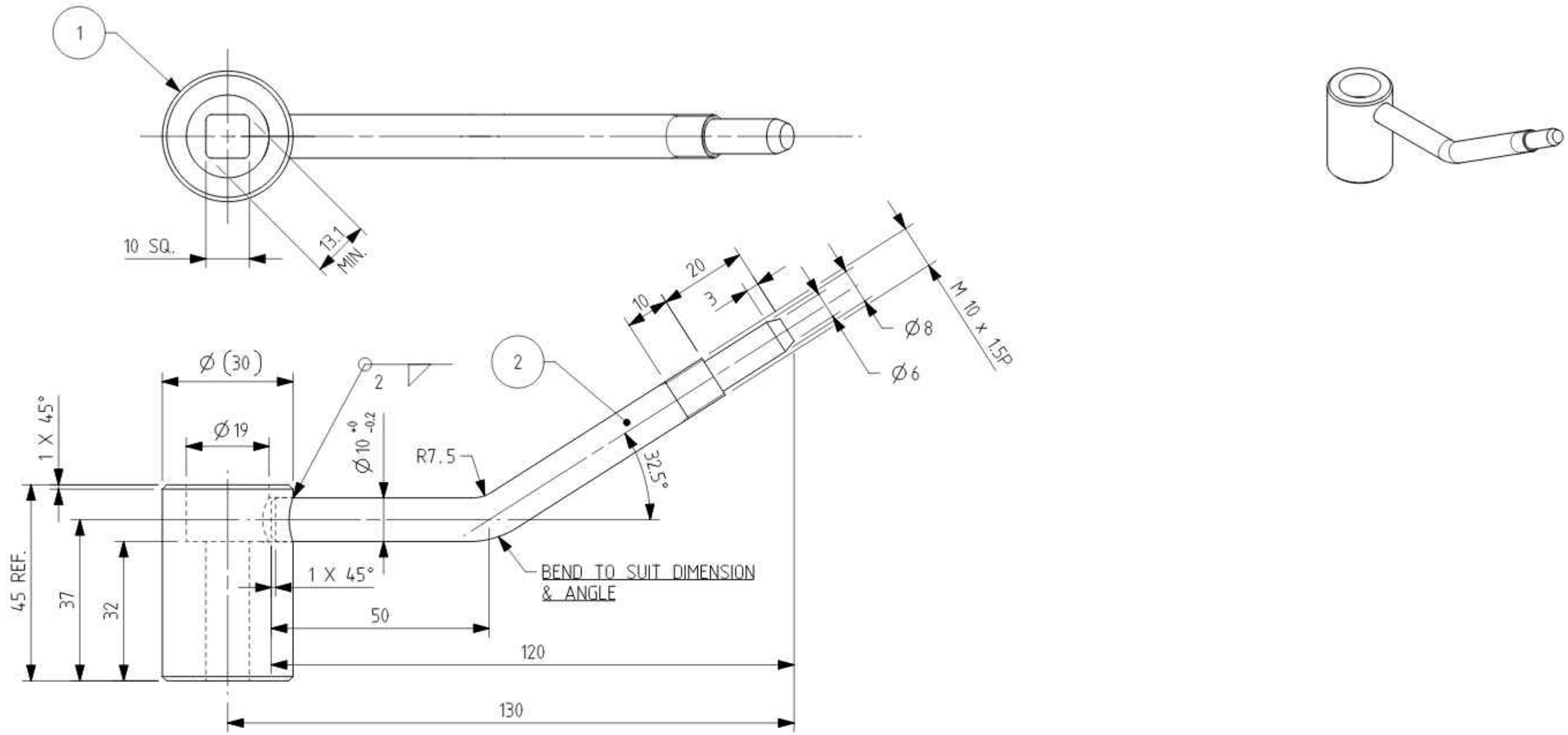

FINISH- TO BE ZINC PLATED

REF. NO.	C&D NO.	PART DRG. NO.	DESCRIPTION	QTY.	MATL	SPECN	WT. EACH IN K.G.
2	/	1209-07.403-045	LEVER ROD	1	STEEL	IS: 2062 GR. C	0.08
1	/	1209-07.403-044	LEVER BOSS	1	STEEL	IS: 2062 GR. C	0.17

अधिकारित DGN		चित्तरंजन रेलइंजन कारखाना CHITTARANJAN LOCOMOTIVE WORKS, INDIA
जाँचा व.अ.अ. CHD SSE	SUBHAN KAR KUMBHA KAR	पदार्थ MATL / प्रति भार कि. ग्रा. WT. EACH IN KG
समीक्षित व.वि.अ. / व.वि.अ. REVIEWED AEE / SEE	Pradeep Khatana	विशिष्ट SPECN
अनुमोदित उ.मु.वि.अ. APPROVED DYCEE	SYAMA PRASAD PATRA	वर्णन DESCRIPTION: LEVER FIXED ASSLY. LHS. (WIPER INSTALLATION)
दिनांक DATE	12-08-21	
पैमाने अनुपात SCALE	1:1	आरेखण संख्या DRAWING NO. 1209-07.303-029
संदर्भ / REF.	IA086-00503 ALT- 4	परिवर्तन संख्या ALTERATION NO. 1 / पृष्ठ SHEET 1 OF 1 / A3

धातु–वेल्डन चिन्ह
भा. मा. : 813 / अ. मा. सं. :2553
WELDING SYMBOLS TO IS:813 / ISO:2553

सतह – खुरदरा का मान
भा. मा. 3073 / अ. मा. सं. 1302
SURFACE ROUGHNESS VALUE TO IS:3073 / ISO:1302

अनिर्दिष्ट सह्य – सीमा भा. मा. : 2102 / अ. मा. सं. : 2768
UNSPECIFIED TOLERANCE TO IS : 2102 / ISO : 2768

ग्रेड GRADE NO.	सं1 N1	सं2 N2	सं3 N3	सं4 N4	सं5 N5	सं6 N6	सं7 N7	सं8 N8	सं9 N9	सं10 N10	सं11 N11	सं12 N12
Rz	0.16-0.3	0.5-0.7	0.9-1.1	1.5-2.0	2.5-3.0	5.0-6.3	9.0-12	16-25	30-40	50-63	75-100	100-250
Ra µm	0.025	0.05	0.1	0.2	0.4	0.8	1.6	3.2	6.3	12.5	25	50
चिन्ह SYMBOL												

TOL. CLS.

परिवर्तन संख्या ALT. NO.	प्राधिकार AUTHY	वर्णन DESCRIPTION	दिनांकित आद्याक्षर DATED INITIAL
1		REDRAWN IN NX WITH 3RD ANGLE PROJECTION	11-06-19

This document/drawing was prepared by or on behalf of CLW and the copyright belongs to CLW. Reproduction in whole or in part requires prior written consent of CLW. As the drawing incorporates confidential information of CLW its disclosure to third parties also requires CLW's prior written consent.

REDRAWN BY TCS

5128877/2026/O/o DY.CEE/D-II

REMOVE ALL BURRS & SHARP EDGES

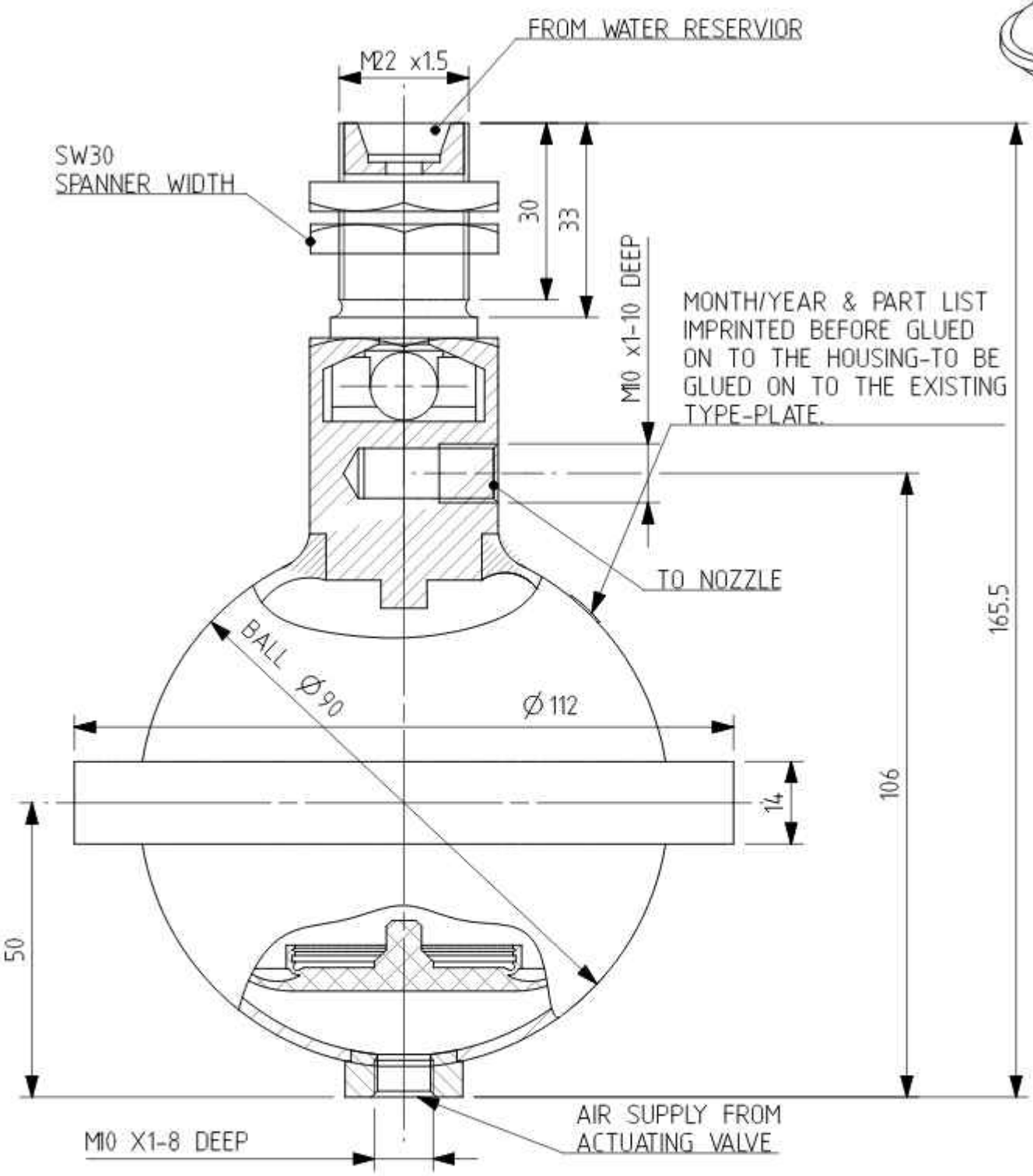

1	-	REDRAWN IN NX WITH 3RD ANGLE PROJECTION	11-06-10
परिवर्तन संख्या ALT.NO.	प्राधिकार AUTHY	वर्णन DESCRIPTION	दिनांक DATED / INITIAL

सतह – खुरदरा का मान भा. मा. 3073 / अ. मा. सं. 1302 SURFACE ROUGHNESS VALUE TO IS3073 / ISO1302

अनिर्दिष्ट सह – सीमा भा. मा. : 2102 / अ. मा. सं. : 2768
UNSPECIFIED TOLERANCE TO IS : 2102 / ISO : 2768

वायु–वेल्डन चिन्ह भा. मा. : 813 / अ. मा. सं. :2553
WELDING SYMBOLS TO IS813 / ISO2553

TOL. CLS.

श्रेणी GRADE NO.	सं.1 N1	सं.2 N2	सं.3 N3	सं.4 N4	सं.5 N5	सं.6 N6	सं.7 N7	सं.8 N8	सं.9 N9	सं.10 N10	सं.11 N11	सं.12 N12
Rz	0.10-0.2	0.5-0.7	0.9-1.1	1.5-2.0	2.5-3.0	5.0-6.3	9.0-12	16-25	30-40	50-63	75-100	160-250
Ra µm	0.025	0.05	0.1	0.2	0.4	0.8	1.6	3.2	6.3	12.5	25	50
चिन्ह SYMBOL												

अभिकल्पित DGN	-	पदार्थ MATL	विशिष्टि SPECN	प्रति भार कि. ग्रा. WT. EACH IN KG
जाँचा CHD	SANJAY KUMAR DAS	आरेखण संदर्भ REF. ASSLY DRG. NO.		
अधीक्षक SUPDT.	-	संस्करण क्र. C & D NO. /	प्रयोग में USED FOR LOCOS WAG-9	
समीक्षित क्र.क REVIEWED SE	CHAN DAN KUMAR R			
अनुमोदित (क.वि.) APPROVED क.मु.वि.अ DYCEE	ANGSU KUMAR VERMA			
दिनांक DATE	01-02-97			
पैमाना अनुपात SCALE	1:1			
संदर्भ / REF.	IA082-00250 ALT.- 0			

चितरंजन रेलइंजन कारखाना
CHITTARANJAN LOCOMOTIVE WORKS, INDIA

वर्णन DESCRIPTION

WATER PUMP

This document/drawing was prepared by or on behalf of CLW and the copyright belongs to CLW.
Reproduction in whole or in part requires prior written consent of CLW.
As the drawing incorporates confidential information of CLW its disclosure to third parties also requires CLW's prior written consent.

3rd ANGLE PROJECTION

आरेखण संख्या DRAWING NO. 1209-07.403-023

परिवर्तन संख्या ALT. NO. 1 | SHEET पन्ना 1 OF 1 | A4

5128877/2026/O/o DY.CEE/D-II

REMOVE ALL BURRS & SHARP EDGES

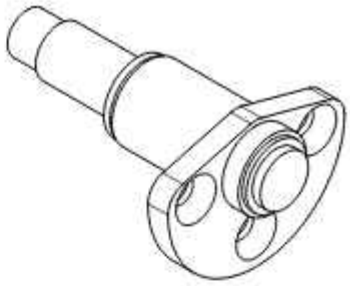

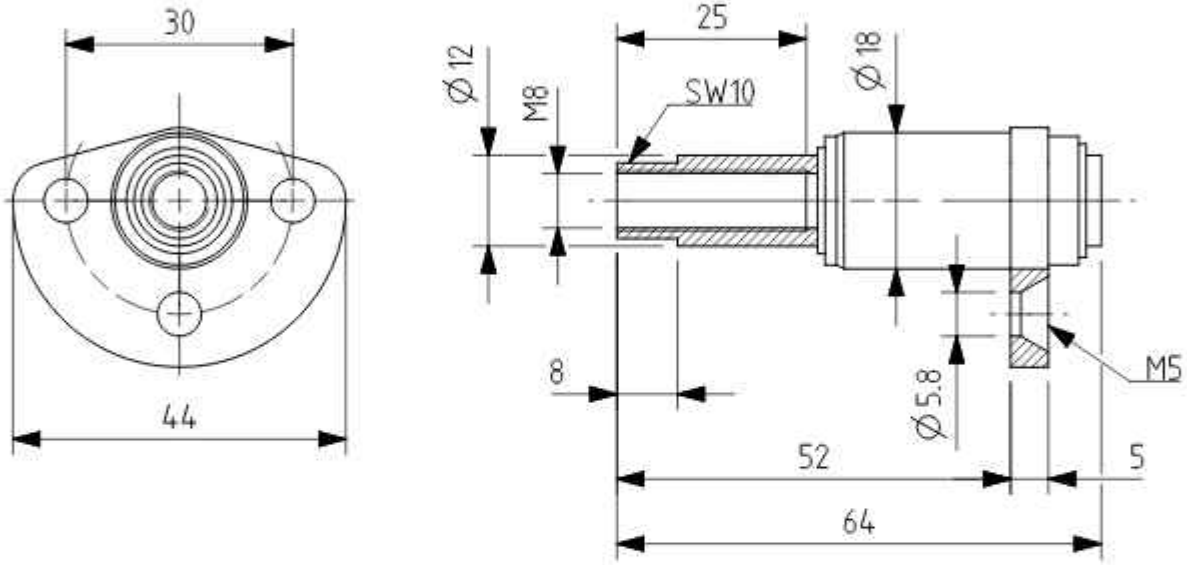

QTY./LOCO: 4 NOS.
USED FOR LOCO WAG-9

परिवर्तन संख्या ALT.NO.	प्राधिकार AUTHY	वर्णन DESCRIPTION	दिनांक हस्ताक्षर DATED INITIAL
1		REDRAWN IN NX WITH 3RD ANGLE PROJECTION	14-06-10

सतह – खुरदरा का मान भा. मा. 3073 / अ. मा. सं. 1302
SURFACE ROUGHNESS VALUE TO IS:3073 / ISO:1302

अनिर्दिष्ट सह – सीमा भा. मा. : 2102 / अ. मा. सं. : 2768
UNSPECIFIED TOLERANCE TO IS : 2102 / ISO : 2768

वायु–वेल्डन चिन्ह भा. मा. : 813 / अ. मा. सं. : 2553
WELDING SYMBOLS TO IS:813 / ISO:2553

TOL. CLS.

श्रेणी GRADE NO.	सं1 N1	सं2 N2	सं3 N3	सं4 N4	सं5 N5	सं6 N6	सं7 N7	सं8 N8	सं9 N9	सं10 N10	सं11 N11	सं12 N12
Rz	0.16-0.3	0.5-0.7	0.9-1.1	1.5-2.0	2.5-3.0	5.0-6.3	9.0-12	16-25	30-40	50-63	75-100	160-250
Ra µm	0.025	0.05	0.1	0.2	0.4	0.8	1.6	3.2	6.3	12.5	25	50
चिन्ह SYMBOL												

अधिकल्पित DGN		
जोंधा य.अ.अ. CHD SSE	ALOKE KUMAR CHAKRABORTY	
समीक्षित य.वि.अ. / व.वि.अ. REVIEWED AEE / SEE	Pradeep Khatana	
अनुमोदित व.मु.वि.अ. APPROVED DYCEE	SYAMA PRASAD PATRA	
दिनांक DATE	14-08-21	
पैमाना अनुपात SCALE	1:1	
संदर्भ / REF.	IA082-00249 ALT.- 1	

चितरंजन रेलइंजन कारखाना
CHITTARANJAN LOCOMOTIVE WORKS, INDIA

पदार्थ MATL | प्रति भार कि. ग्रा. WT. EACH IN KG

विशिष्ट SPECN

वर्णन DESCRIPTION: BEARING AND SHAFT ASSLY.

आरेखण संख्या DRAWING NO. 1209-07.403-024

परिवर्तन संख्या ALTERATION. NO. 1 | पर्ण SHEET 1 OF 1 | A4

This document/drawing was prepared by or on behalf of CLW and the copyright belongs to CLW. Reproduction in whole or in part requires prior written consent of CLW. As the drawing incorporates confidential information of CLW its disclosure to third parties also requires CLW's prior written consent.

REDRAWN BY TCS

5128877/2026/O/o DY.CEE/D-II

REMOVE ALL BURRS & SHARP EDGES

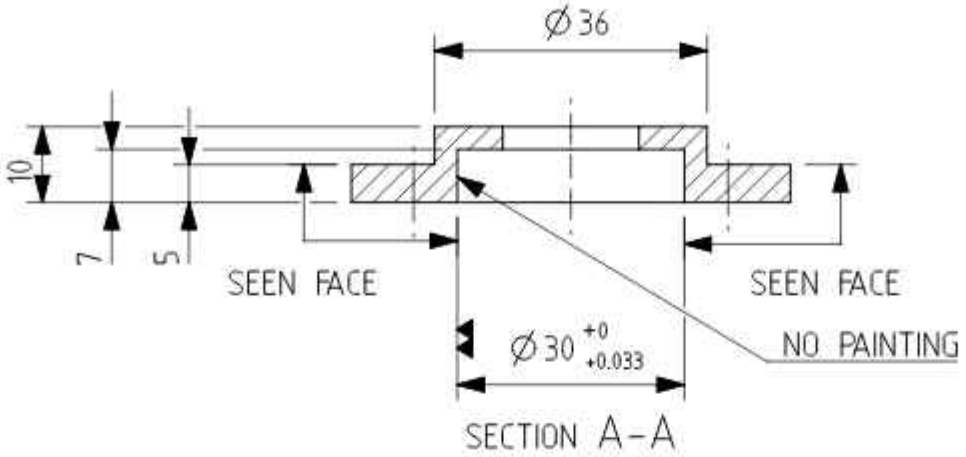

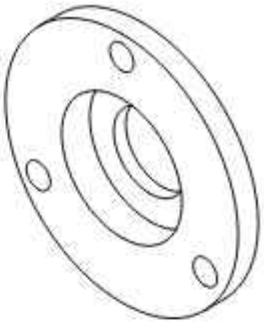

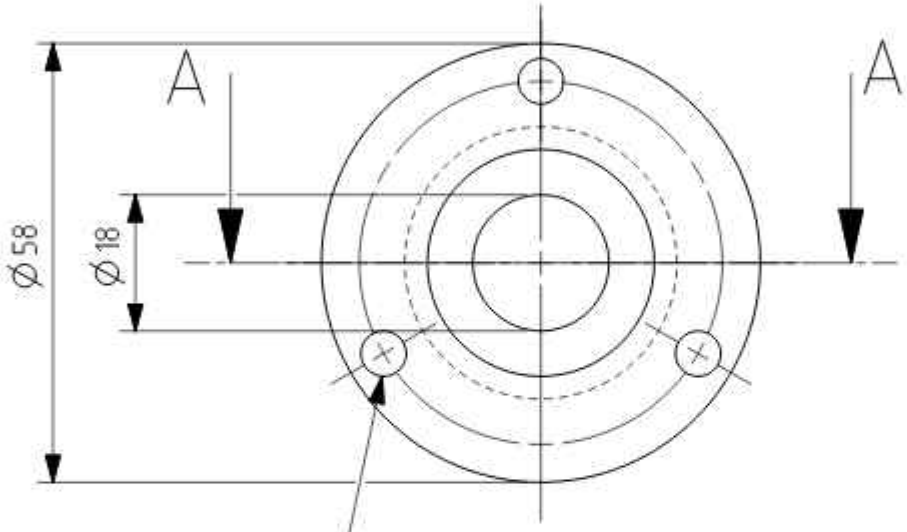

3 X Ø 6 HOLES EQUISPACED
AS SHOWN ON 48 P.C.D.

NOTES:-

1. PAINTING- TO ABB SPECN. ES1213

2. COLOUR-TO MATCH RAL 9003
SIGNAL WHITE ON SEEN FACE ONLY.

QTY./LOCO: 4 NOS.
USED FOR LOCO WAG-9

1		REDRAWN IN NX WITH 3RD ANGLE PROJECTION	14-06-19
परिवर्तन संख्या ALT.NO.	प्राधिकार AUTHY	वर्णन DESCRIPTION	दिनांक हस्ताक्षर DATED INITIAL

सतह – खुरदरा का माप भा. मा. 3073 / अ. मा. सं. 1302 SURFACE ROUGHNESS VALUE TO IS:3073 / ISO:1302

अनिर्दिष्ट सह – सीमा भा. मा. : 2102 / अ. मा. सं. : 2768
UNSPECIFIED TOLERANCE TO IS : 2102 / ISO : 2768

धातु–वेल्डन चिन्ह भा. मा. : 813 / अ. मा. सं. : 2553
WELDING SYMBOLS TO IS:813 / ISO:2553

TOL. CLS.

ग्रेडांक GRADE NO.	सं.1 N1	सं.2 N2	सं.3 N3	सं.4 N4	सं.5 N5	सं.6 N6	सं.7 N7	सं.8 N8	सं.9 N9	सं.10 N10	सं.11 N11	सं.12 N12
Rz	0.16-0.3	0.5-0.7	0.9-1.1	1.5-2.0	2.5-3.0	5.0-6.3	9.0-12	16-25	30-40	50-63	75-100	160-250
Ra µm	0.025	0.05	0.1	0.2	0.4	0.8	1.6	3.2	6.3	12.5	25	50
चिन्ह SYMBOL												

अधिकृतियां DGN	
जोंधा य.अ.अ. CHD SSE	ALOKE KUMAR CHAKRABORTY
पर्यालोचित य.वि.अ. / य.वि.अ. REVIEWED AEE / SEE	Pradeep Khatana
अनुमोदित ए.मु.वि.अ. APPROVED DYCEE	SYAMA PRASAD PATRA
दिनांक DATE	14-08-21
पैमाना अनुपात SCALE	1:1
संदर्भ / REF.	IA082-00256 ALT.-3

चितरंजन रेलइंजन कारखाना
CHITTARANJAN LOCOMOTIVE WORKS, INDIA

पदार्थ MATL	STEEL	प्रति भार कि. ग्रा. WT. EACH IN KG	0.1
विशिष्ट SPECN	IS: 2062 GR. C		
वर्णन DESCRIPTION	SEAL FLANGE (WIPER INSTALLATION)		
आरेखण संख्या DRAWING NO.	1209-07.403-025		
परिवर्तन संख्या ALTERATION. NO.	1	पर्ण SHEET 1 OF 1	A4

This document/drawing was prepared by or on behalf of CLW and the copyright belongs to CLW. Reproduction in whole or in part requires prior written consent of CLW. As the drawing incorporates confidential information of CLW its disclosure to third parties also requires CLW's prior written consent.

REDRAWN BY TCS

5128877/2026/O/o DY.CEE/D-II

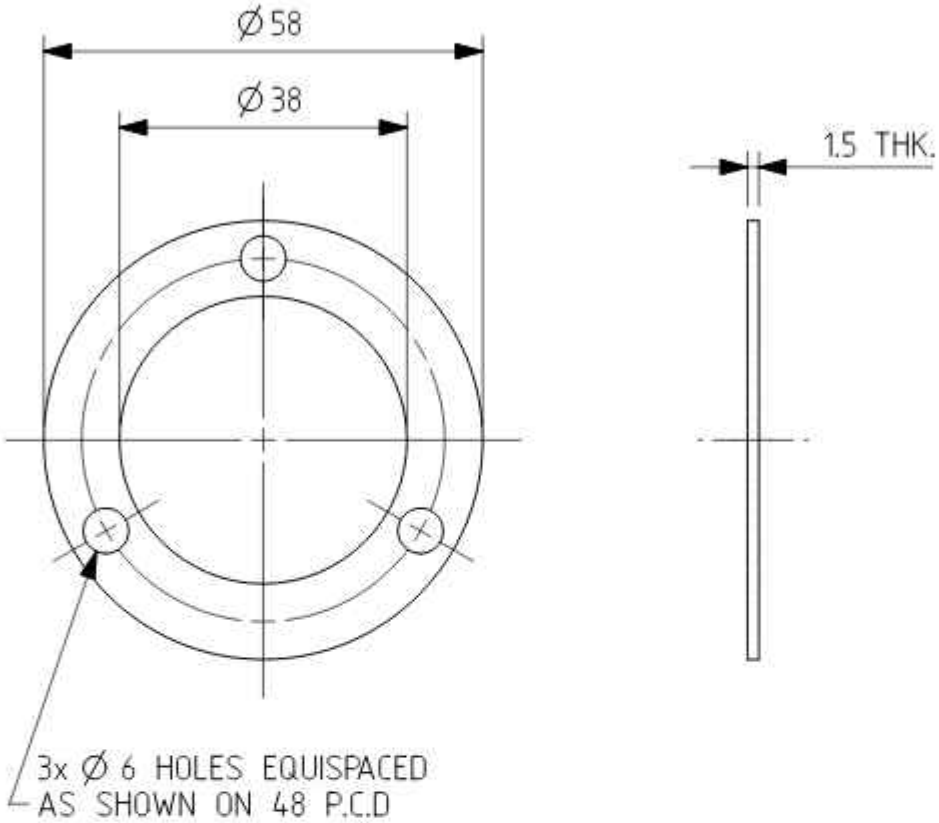

NOTE: MATERIAL MUST NOT SWELL UNDER THE EFFECT OF OIL & WATER.

परिवर्तन संख्या ALT.NO.	प्राधिकार AUTHY	वर्णन DESCRIPTION	दिनांक DATED / INITIAL
1		REDRAWN IN NX WITH 3RD ANGLE PROJECTION	14-06-10

सतह – खुरदरा का माप भा. मा. 3073 / अ. मा. सं. 1302 SURFACE ROUGHNESS VALUE TO IS:3073 / ISO:1302

अनिर्दिष्ट सह – सीमा भा. मा. : 2102 / अ. मा. सं. : 2768
UNSPECIFIED TOLERANCE TO IS : 2102 / ISO : 2768

धातु–वेल्डन चिन्ह भा. मा. : 813 / अ. मा. सं. : 2553
WELDING SYMBOLS TO IS:813 / ISO:2553

TOL. C.S.

ग्रेडांक GRADE NO.	सं1 N1	सं2 N2	सं3 N3	सं4 N4	सं5 N5	सं6 N6	सं7 N7	सं8 N8	सं9 N9	सं10 N10	सं11 N11	सं12 N12
Rz	0.16-0.3	0.5-0.7	0.9-1.1	1.5-2.0	2.5-3.0	5.0-6.3	9.0-12	16-25	30-40	50-63	75-100	160-250
Ra µm	0.025	0.05	0.1	0.2	0.4	0.8	1.6	3.2	6.3	12.5	25	50
चिन्ह SYMBOL												

अधिकारित DGN	
जाँचा ग.अ.अ. CHD SSE	
पुनरीक्षित ग.वि.अ. / ग.वि.अ. REVIEWED AEE / SEE	-
अनुमोदित ए.मु.वि.अ. APPROVED DYCEE	SYAMA PRASAD PATRA
दिनांक DATE	05-02-97
पैमाना अनुपात SCALE	1:1
संदर्भ / REF.	IA082-00257 ALT.- 1

चितरंजन रेलइंजन कारखाना
CHITTARANJAN LOCOMOTIVE WORKS, INDIA

पदार्थ MATL	NEOPRENE	प्रति भार कि. ग्रा. WT. EACH IN KG	0.01
विशिष्ट SPECN	-		
वर्णन DESCRIPTION	Gasket		
आरेखण संख्या DRAWING NO.	1209-07.403-026		
परिवर्तन संख्या ALTERATION. NO.	01	पर्ण SHEET 1 OF 1	A4

This document/drawing was prepared by or on behalf of CLW and the copyright belongs to CLW. Reproduction in whole or in part requires prior written consent of CLW. As the drawing incorporates confidential information of CLW its disclosure to third parties also requires CLW's prior written consent.

5128877/2026/O/o DY.CEE/D-II

REMOVE ALL BURRS & SHARP EDGES

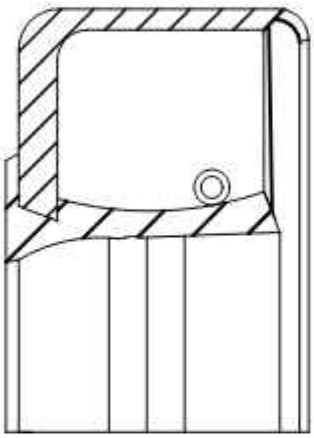

REF.NO	SHAFT ∅	SEAL O/D	WIDTH	TYPE
1	12	25	7	FT2
2	16	30	7	FT2

निर्देश संख्या REF. NO.	अंग आरेखण संख्या PART DRG. NO.	वर्णन DESCRIPTION	मात्रा QTY./LOCO	पदार्थ MATL	विशिष्टि SPECN	प्रति भार कि. ग्रा. WT. EACH IN K.G.
2		OIL SEAL	4			
1		OIL SEAL	4			

परिवर्तन संख्या ALT.NO.	प्राधिकार AUTHY	वर्णन DESCRIPTION	दिनांक DATED INITIAL

सतह – फिनिश मा. मा. 8073 / ब. मा. सं. 1302 SURFACE ROUGHNESS VALUE TO IS8073 / 1302

अनिर्दिष्ट सह – सीमा मा. मा. : 2102 / ब. मा. सं. : 2768 UNSPECIFIED TOLERANCE TO IS : 2102 / ISO : 2768

वायु-वेल्डन चिन्ह मा. मा. : 813 / ब. मा. सं. : 12553 WELDING SYMBOLS TO IS813 / ISO2553

TOL. CLS.

पदांक GRADE NO.	सं1 N1	सं2 N2	सं3 N3	सं4 N4	सं5 N5	सं6 N6	सं7 N7	सं8 N8	सं9 N9	सं10 N10	सं11 N11	सं12 N12
Rz	0.10-0.3	0.5-0.7	0.9-1.1	1.5-2.0	2.5-3.0	5.0-6.3	9.0-12	16-25	30-40	50-63	75-100	160-250
Ra µm	0.025	0.05	0.1	0.2	0.4	0.8	1.6	3.2	6.3	12.5	25	50
चिन्ह SYMBOL												

अधिकारित DGN	
जाँचा च.अ.अ. CHD SSE	SANJAY KUMAR DAS 2023.05.23 18:46:43 +05'30'
समीक्षित च.वि.अ. / व.वि.अ. REVIEWED AEE / SEE	CHANDAN KUMAR
अनुमोदित व.मु.वि.अ. APPROVED DYCEE	ANSHU KUMAR VERMA 2023.05.24 14:57:07 +05'30'
दिनांक DATE	
रैखिक अनुपात SCALE	N.T.S
संदर्भ / REF.	ALL-

चितरंजन रेलइंजन कारखाना
CHITTARANJAN LOCOMOTIVE WORKS, INDIA

पदार्थ MATL | प्रति भार कि. ग्रा. WT. EACH IN KG

विशिष्टि SPECN

वर्णन DESCRIPTION: OIL SEAL

आरेखण संख्या DRAWING NO.: 1209-07.403-030

परिवर्तन संख्या ALTERATION. NO. | पर्ण SHEET 1 OF 1 | A4

This document/drawing was prepared by or on behalf of CLW and the copyright belongs to CLW. Reproduction in whole or in part requires prior written consent of CLW. As the drawing incorporates confidential information of CLW its disclosure to third parties also requires CLW's prior written consent.

REDRAWN BY COE

5128877/2026/O/o DY.CEE/D-II

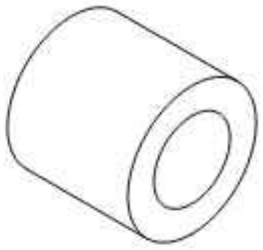

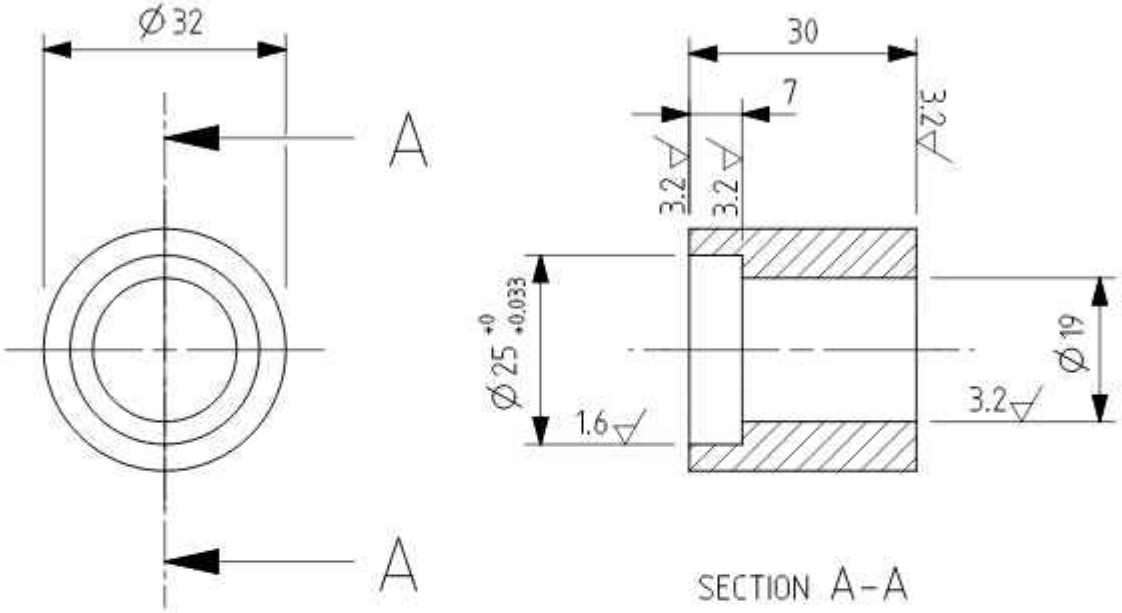

USED FOR LOCO WAG-9 & WAP-5 (1)
C&D NO. : T304/173 & B304/153
NEXT LEVEL ASSEMBLY: 1209-07.203-031 REF. NO. 7

REF. NO.	PART DRG. NO.	DESCRIPTION	NO./LOCO	MATL	SPECN	WT. EACH IN K.G.
		SEAL BOSS WIPER INSTALLATION	4	STEEL	IS: 2062 GR. C	

परिवर्तन संख्या ALT.NO.	प्राधिकार AUTHY	वर्णन DESCRIPTION	दिनांक DATED INITIAL
2		REDRAWN IN NX WITH 3RD ANGLE PROJECTION	10-03-21
1	DY.CEE/D	WAP-5 CLASS OF LOCO ADDED.	03-05-11

सतह – खुरदरा का माप भा. मा. 3073 / अ. मा. सं. 1302 SURFACE ROUGHNESS VALUE TO IS:3073 / ISO:1302

अनिर्दिष्ट सह – सीमा भा. मा. : 2102 / अ. मा. सं. : 2768
UNSPECIFIED TOLERANCE TO IS : 2102 / ISO : 2768

धातु–वेल्डन चिन्ह भा. मा. : 813 / अ. मा. सं. : 2553
WELDING SYMBOLS TO IS:813 / ISO:2553

TOL. CLS.

ग्रेडांक GRADE NO.	सं.1 N1	सं.2 N2	सं.3 N3	सं.4 N4	सं.5 N5	सं.6 N6	सं.7 N7	सं.8 N8	सं.9 N9	सं.10 N10	सं.11 N11	सं.12 N12
Rz	0.10-0.2	0.5-0.7	0.9-1.1	1.5-2.0	2.5-3.8	5.0-6.3	9.0-12	16-25	30-40	50-63	75-100	160-250
Ra µm	0.025	0.05	0.1	0.2	0.4	0.8	1.6	3.2	6.3	12.5	25	50
चिन्ह SYMBOL												

अधिकृतियां DGN	
जोंधा व.अ.अ. CHD SSE	SUBHAN KAR KUMBH AKAR
पर्यालोचित व.वि.अ. / व.वि.अ. REVIEWED AEE / SEE	Pradeep Khatana
अनुमोदित ए.मु.वि.अ. APPROVED DYCEE	SYAMA PRASAD PATRA
दिनांक DATE	10-03-21
पैमाना अनुपात SCALE	1:1
संदर्भ / REF.	IA082-00255 ALT.- 1

चितरंजन रेलइंजन कारखाना
CHITTARANJAN LOCOMOTIVE WORKS, INDIA

पदार्थ MATL	STEEL
प्रति भार कि. ग्रा. WT. EACH IN KG	
विशिष्ट SPECN	IS: 2062 GR. C
वर्णन DESCRIPTION	SEAL BOSS WIPER INSTALLATION
आरेखण संख्या DRAWING NO.	1209-07.403-032
परिवर्तन संख्या ALTERATION. NO.	2
पर्ण SHEET	1 OF 1
	A4

This document/drawing was prepared by or on behalf of CLW and the copyright belongs to CLW. Reproduction in whole or in part requires prior written consent of CLW. As the drawing incorporates confidential information of CLW its disclosure to third parties also requires CLW's prior written consent.