Signature Not Verified
Digitally signed by SEMMATO SUVVARI
Date: 2026.01.09 12:04:04 IST
Reason: IRES-CRIS
Location: New Delhi

Signature Not Verified
Digitally signed by PONNA VESWANTH
Date: 2026.01.09 11:10:22 IST
Reason: IRES
Location: IRES-CRIS

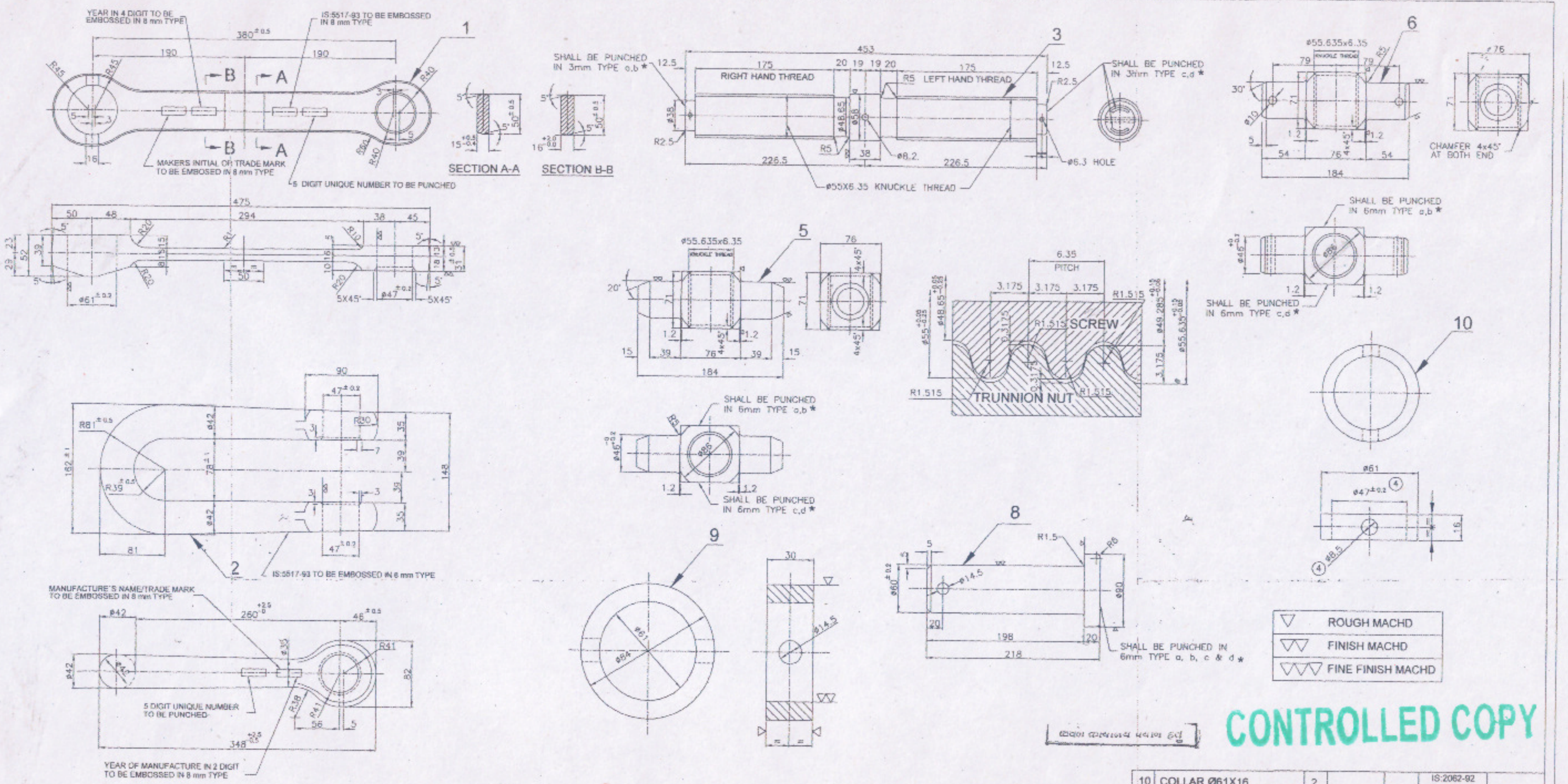

CONTROLLED COPY

ITEM	DESCRIPTION & DIMENSIONS	No. OFF PER ASSLY	REF. DRG.	WT. OF ONE kg	MTL. & SPEC.	REMARKS
10	COLLAR Ø61X16	2			IS:2062-92 Fe410W-C	
9	COLLAR Ø84X30	1			IS:2062-92 Fe410W-C	
8	PIN Ø60x218	1			IS:5517-93 Gr.35Mn6 Mo3	HEAT TREATED
~~7~~	~~PIN Ø16x85~~	~~1~~			IS:2062-92 Fe410W-C	
6	TRUNNION (R.H.THREAD)	1			IS:5517-93 Gr.35Mn6 Mo3	HEAT TREATED
5	TRUNNION (L.H.THREAD)	1			IS:5517-93 Gr.35Mn6 Mo3	HEAT TREATED
(5) 4	BENT COUPLING	1			IS:2062-92 Fe410W-C	
3	SCREW Ø58x453	1			IS:5517-93 Gr.35Mn6 Mo3	HEAT TREATED
2	BENT COUPLING LINK	1			IS:5517-93 Gr.35Mn6 Mo3	HEAT TREATED
1	LINK	2			IS:5517-93 Gr.35Mn6 Mo3	HEAT TREATED

NOTE:-

1. FOR THE KNUCKLE THREAD PROFILE OF SCREW IS: 4695 TO BE REFERRED.
*2. STAMP / PUNCH-
   (a) MONTH & YEAR.
   (b) TRADE MARK
   (c) SK - 99002.
   (d) IS: 5517 - 93.
3. HEAT TREATMENT TO BE DONE SEPERATELY FOR EACH TYPE OF COMPONENT IN A BATCH. BATCH No. TO BE LIGHTLY PUNCHED AT SUITABLE LOCATION.

ALT.	ITEM	AUTHY.	DESCRIPTION	DATE
(5)	-	CD/06/14	ITEM No. 4, DIMENSION CORRECTED	2/14
(4)	-	CD/09/13	DRAWING REVISED AND REDRAWN.	12/13
(3)	-	SS/07/2001	DRAWING REVISED AND ITEM 7 DELETED.	09/2001
(2)	-	CD/3/2000	MACHINING SYMBOL ADDED AND MARKING CORRECTED.	02/2000
(1)	1, 10	CD/16/99	IN ITEM - 1 Sec. AA, BB & ITEM - 4, 7, 9 & 10 MTL. & SPEC. CORRECTED	8/99

RDSO SK-99001
ASSEMBLY DRAWINGS
REFERENCE:-
CHECK SHEET No.:-

SUPERSEDED BY:
SUPERSEDES:

SCALE	P	
1:1	C	
1:2	D	SP AWASTHI
	T	
	J.S.	CD/4/99

B.G. | R.D.S.O. (C)

INDIAN RAILWAY STANDARDS
ENHANCED CAPACITY.

DETAILS FOR SCREW COUPLING

GROUP XXX
XXXS

SKETCH-99002