TS/DTC-0-0-001

ROUGH MACHINED	ROUGH CLEANED
FINISH MACHINED	CHAMFERED
FINE FINISH MACHINED	BURRS REMOVED

ALTERATION

(a) 05/2022
FOR ITEM-6,9,11 & 12 REF DRG CORRECTED FOR ITEM-1 QTY IN COL-1 CORRECTED FROM 4 TO 1. NOTE-3 & 4 MODIFIED AND NOTE-5 ADDED.
-Sd- 12-05-2022
SSE/D AME/D

(b) 06/2022
FOR ITEM-4 REF DRG DELETED FOR ITEMS-9 & 11, REF DRG ALTD FROM 88902002 & 88902012 TO 88903010 & 88903013 RESPECTIVELY
-Sd- 27-06-2022
SSE/D AME/D

(c) 08/2022
FOR ITEM-4, MEDHA REF DRG NO. D-A675UV2-140738 ADDED.
-Sd- 12-08-2022
SSE/D AME/D

(d) 09/2023
QTY FOR TS/VM/DTC ADDED IN COL-1 & 2 AND ASSEMBLY DRG NO. TS/VM/DTC-9-0-002 ADDED.
-Sd- 4-9-2023
SSE/D AME/D

(e) 01/2024
QTY FOR ITEM-13 TRANSFERED FROM COL-2 TO 1. QTY FOR TS/VM/DTC IN COL-1,2 AND ASSY DRG.No. TS/VM/DTC-9-0-002 DELETED.
-Sd- 20-1-2024
SSE/D AME/D

(f) 03/2024
QTY FOR ITEM-6 MOVED FROM COL-2 TO 1.
-Sd- 5-3-2024
SSE/D AME/D

(g) 08/2024
FOR ITEM-1, REF.DRG. DELETED AND ADDED IN TABLE-1.
SSE/D AME/D

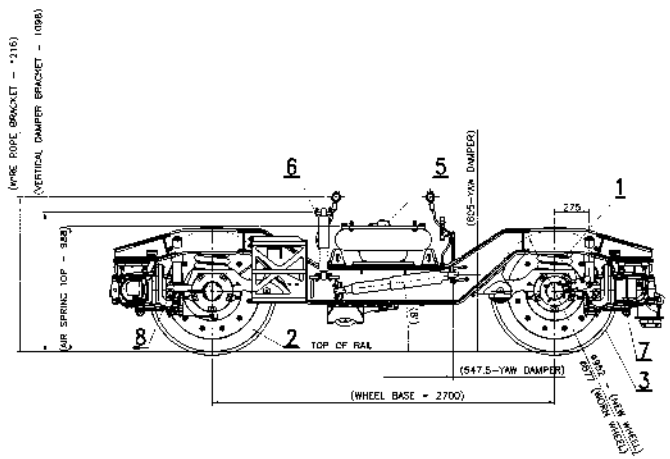

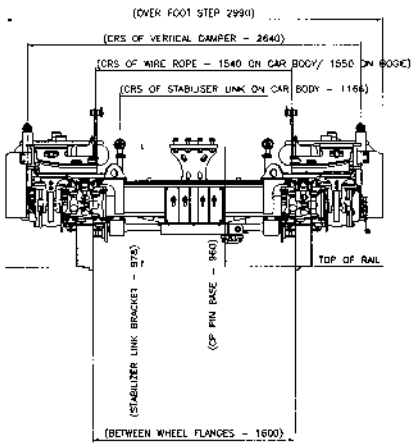

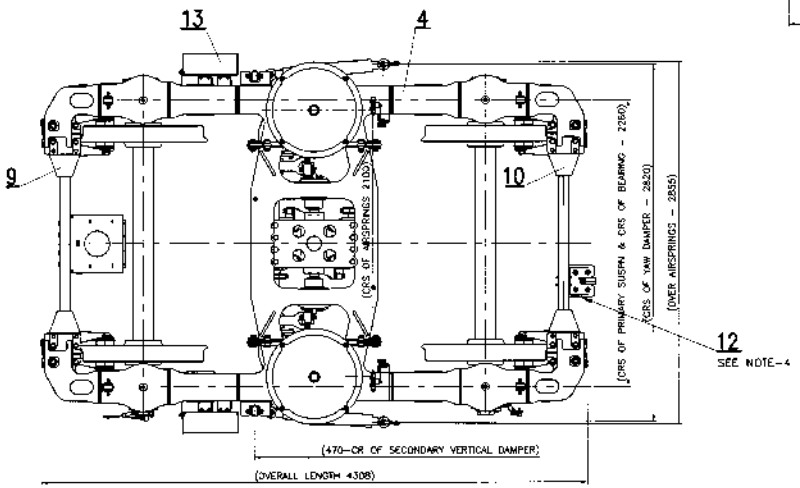

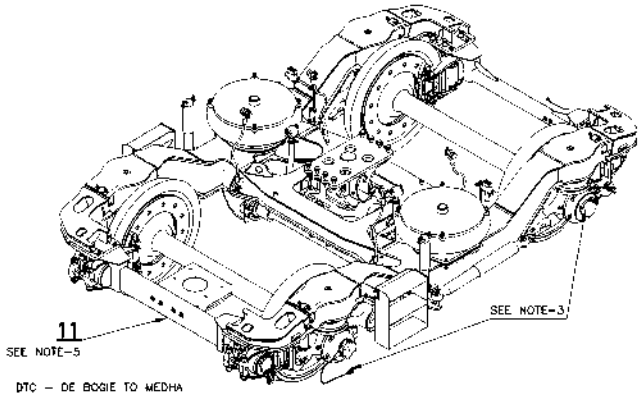

DTC - DE BOGIE TO MEDHA
DRG NO. D-A675UV2-132985

ISOMETRIC VIEW

TABLE-1

ITEM No.	DESCRIPTION		DRG. No
1.	PRIMARY SUSPENSION ARRANGEMENT	WITH SCREWED BUMP STOP	89001001
		WITH WELDED BUMP STOP	89001007

NOTE:

1. FOR OPEN TOLERANCES REFER DRG. NO. ICF/STD-9-0-001
2. COL- 1 PERTAINS TO SHELL ITEMS.
   COL- 2 PERTAINS TO FOR ITEMS
3. LOCATION/KEY DIAGRAM OF EQUIPMENTS AS PER DRG NO. 89002001, 88902003 SHALL BE FOLLOWED.
4. APC RECEIVER AND FIXING ARRGT. SHALL BE IN THE SCOPE OF ELECTRICS SUPPLIER.
5. TCAS RECEIVER / RFID READER AND FIXING ARRGT. SHALL BE IN THE SCOPE OF TCAS EQUIPMENT SUPPLIER.

NO. OF ASSEMBLIES REQUIRED PER COACH		
TYPE OF COACH	COLS.	COL-1 COL-2
# TS/DTC		1 1

QT.		DESCRIPTION & DIMENSION	ITEM	REF.DRGS	MAT.SPEC	WEIGHT/UNIT	REMARKS
-	1	FOOT STEP FIXING ARRGT.	13	[illegible]			
1	-	APC RECEIVER FIXING ARRGT.	12	[illegible]			SEE NOTE-4
1	-	TCAS RECEIVER/RFID READER FIXING ARRGT.	11	[illegible]			SEE NOTE-5
-	1	FIXING ARRGT. OF BEAM FOR APC	10	[illegible]			
-	1	FIXING ARRGT. OF BEAM FOR TCAS	9	[illegible]			
1	1	SUSPENSION DIAGRAMMATIC ARRGT	8	TS/MC 9-0-005			
1	-	DISC BRAKE FIXING ARRANGEMENT	7	TS/MC/DTC/MC 0-2-001			
-	1	SECONDARY SUSPENSION ARRGT. - (STAGE-2)	6	[illegible]			
-	1	SECONDARY SUSPENSION ARRGT. - (STAGE-1)	5	[illegible]			
-	1	BOGIE FRAME ARRGT (DE)	4	D-A675UV2-140738			
-	1	WHEEL SET - INNER	3	[illegible]			
-	1	WHEEL SET - OUTER	2	[illegible]			
-	1	PRIMARY SUSPENSION ARRANGEMENT	1	SEE TABLE-1			

PER ASSY / PER ASSY

GROUP: 0-0

BOGIE GENERAL ARRANGEMENT FOR TRAIN SET DTC COACHES (DRIVING END BOGIE)

SUPERSEDED BY:
SUPERSEDES: TS/DTC-0-0-001 A3 1/-

SCALE 1.2U | SSE/D SAMPATHU NATHAN M | CHD | ALTD | DRN J.RAMESH RAVI

Alpha Alt:- 0

INTEGRAL COACH FACTORY CHENNAI-38

DATA CODE NO. 889 | INDIAN RAILWAY STANDARDS | SHEET 1 OF 1 | TS/DTC-0-0-001

FORM -IR.A1-840X600

TS/DTC-9-0-002 ASSEMBLY DRAWINGS.

Num.	Alt.	DATE OF LATEST ALT	DATE OF FIRST ISSUE	AME/SWE
		24-9-2024	06-09-2021	

Signature Not Verified
Digitally signed by NIMMA SHIREESHA
Date: 2026.06.11 14:12:54 IST
Reason: IREPS-CRIS
Location: New Delhi

TS/DTC-0-0-002

ROUGH MACHINED	ROUGH CLEANED
FINISH MACHINED	CHAMFERED
FINE FINISH MACHINED	BURRS REMOVED

ALTERATION

(a) 08/2022
ITEM-9, 10 & NOTE-4 ADDED. FOR ITEMS-2,3 & 5 REF DRG CORRECTED. FOR ITEM-1 QTY IN COL-1 CORRECTED FROM 4 TO 1. NOTE-3 MODIFIED.
-Sd- 22-05-2022
SSE/D AME/D

(b) 08/2022
FOR ITEM-4, REF DRG DELETED.
-Sd- 22-08-2022
SSE/D AME/D

(c) 08/2022
FOR ITEM-4, MEDHA REF DRG NO. D-A675UV2-141340 ADDED.
-Sd- 12-08-2022
SSE/D AME/D

(d) 09/2023
QTY FOR TS/VM/DTC ADDED IN COL-1 & 2. ASSY DRG. No TS/VM/DTC-9-0-002 ADDED.
-Sd- 4-9-2023
SSE/D AME/D

(e) 03/2024
QTY OF ITEM-8 MOVED FROM COL-2 TO 1. QTY OF TS/VM/DTC IN COL-1 & 2 AND ASSY DRG.No. TS/VM/DTC-9-0-002 DELETED.
-Sd- 5-3-2024
SSE/D AME/D

(f) 09/2024
FOR ITEM-1, REF DRG. DELETED AND ADDED IN TABLE-1
SSE/D AME/D

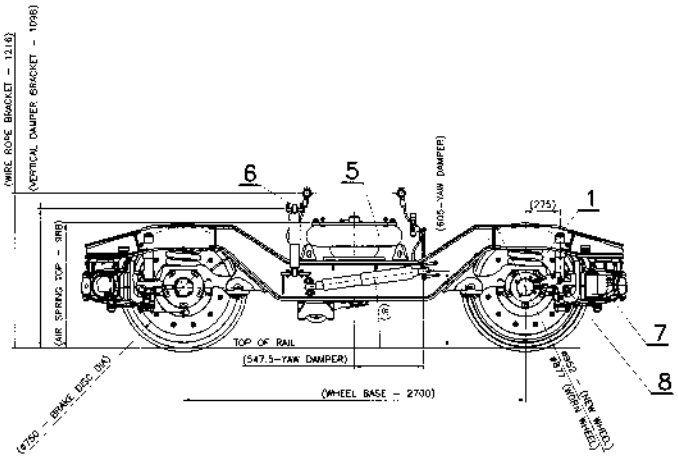

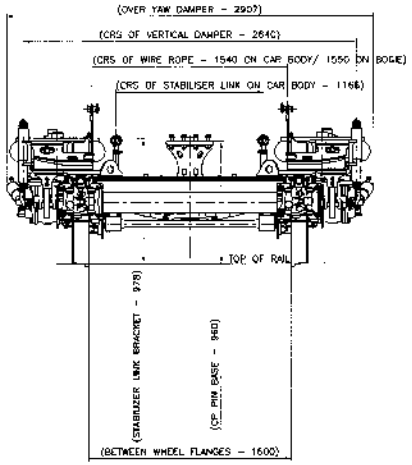

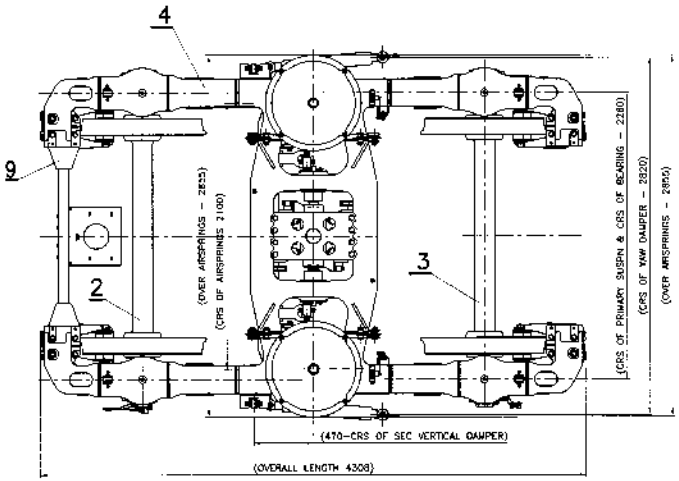

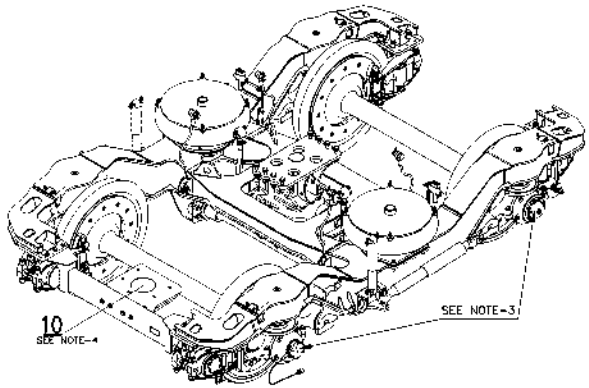

DTC REAR END BOGIE TO MEDHA
DRG. NO. D-A675UV2-135823

ISOMETRIC VIEW

TABLE-1

ITEM No.	DESCRIPTION		DRG No.
1.	PRIMARY SUSPENSION ARRANGEMENT	WITH SCREWED BUMP STOP	89001001
		WITH WELDED BUMP STOP	89001007

NO. OF ASSEMBLIES REQUIRED PER COACH			
TYPE OF COACH	COLS	COL-1	COL-2
# TS/DTC		1	1

NOTE:

1. FOR OPEN TOLERANCES REFER DRG NO ICF/STD-G-0-001.
2. COL-1 PERTAINS TO SHELL ITEMS.
   COL-2 PERTAINS TO FUR ITEMS.
3. LOCATIONS/KEY DIAGRAM OF EQUIPMENTS AS PER DRG NO. 89002001, 89902003 SHALL BE FOLLOWED.
4. TCAS / RFID READER AND FIXING ARRGT SHALL BE IN THE SCOPE OF TCAS EQUIPMENT SUPPLIER.

QTY		DESCRIPTION & DIMENSION	ITEM	REF DRGS	MAT.SPEC	WEIGHT/UNIT	REMARKS
1	–	TCAS RECEIVER / RFID READER ARRGT.	10	88903013			SEE NOTE-4
–	1	FIXING ARRGT OF BEAM FOR TCAS	9	88903016			
1	1	SUSPENSION DIAGRAMMATIC ARRGT	8	TS/MC 8-0-005			
1	–	DISC BRAKE FIXING ARRANGEMENT	7	MA8118/AC/AC 3-2-001			
–	1	SECONDARY SUSPENSION ARRGT (STAGE-2)	6	89002004			
–	1	SECONDARY SUSPENSION ARRGT (STAGE-1)	5	89002003			
–	1	BOGIE FRAME ARRGT (RE)	4	D-A675UV2-141340			
–	1	WHEEL SET - INNER	3	88902002			
–	1	WHEEL SET - OUTER	2	88902001			
–	1	PRIMARY SUSPENSION ARRANGEMENT	1	SEE NOTE-1			

2	1	GROUP: B-D
PER ASSY	PER ASSY	

BOGIE GENERAL ARRANGEMENT FOR TRAIN SET DTC COACHES (REAR END BOGIE)

SUPERSEDED BY:
SUPERSEDES: TS/DTC-0-0-002 A.1 s/-

SCALE 1:20	SSE/D SABAPATHY NATHAN V
	CHD
	ALTD J.RAMESH
	DRN K.GNANADESIGAN

Alpha No.:-

INTEGRAL COACH FACTORY CHENNAI-38

DATA CODE NO. 889

INDIAN RAILWAY STANDARDS

SHEET: 1 OF 1

TS/DTC-0-0-002

FORM:-IR,A1-840X600

TS/DTC-9-0-002			
ASSEMBLY DRAWINGS			
04-9-2024	06-09-2021		
0 Num. All	DATE OF LATEST ALT	DATE OF FIRST ISSUE	AME/SME

Signature Not Verified
Digitally signed by NIMMA SHIREESHA
Date: 2026.06.11 14:12:54 IST
Reason: IREPS-CRIS
Location: New Delhi