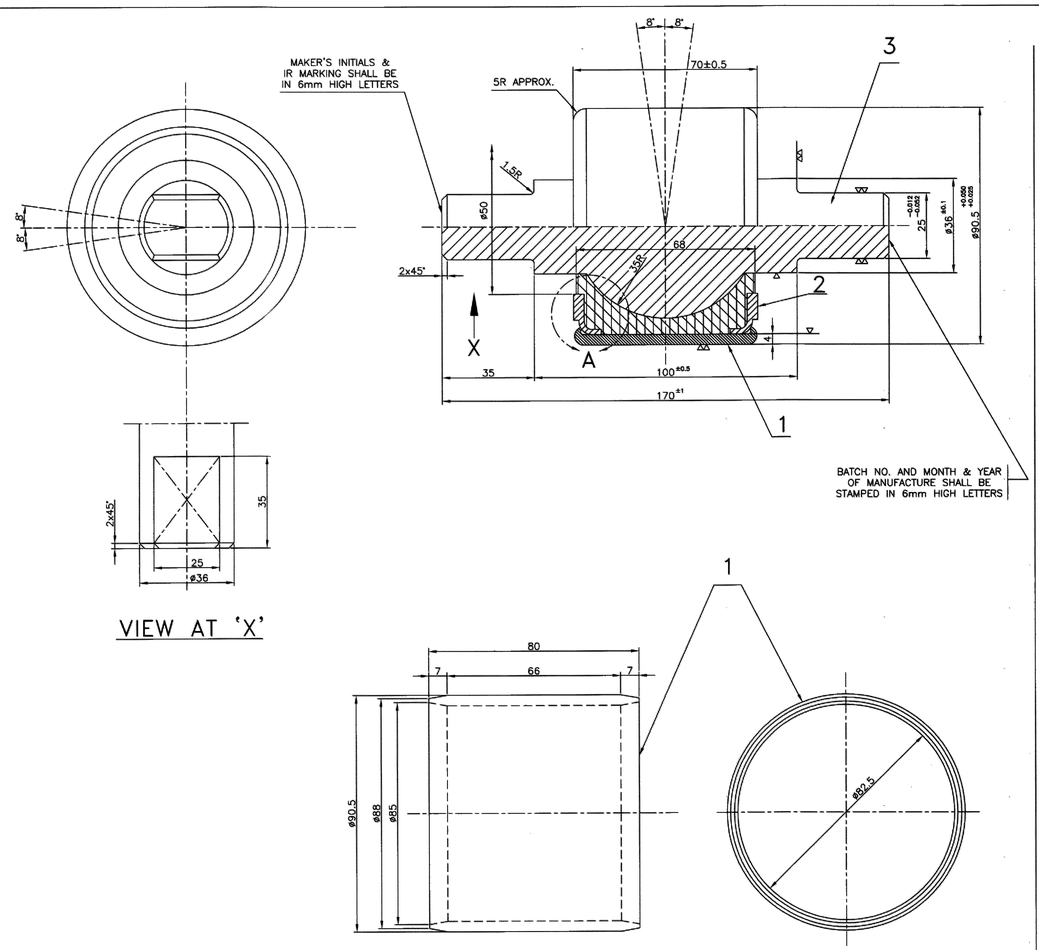

VIEW AT 'X'

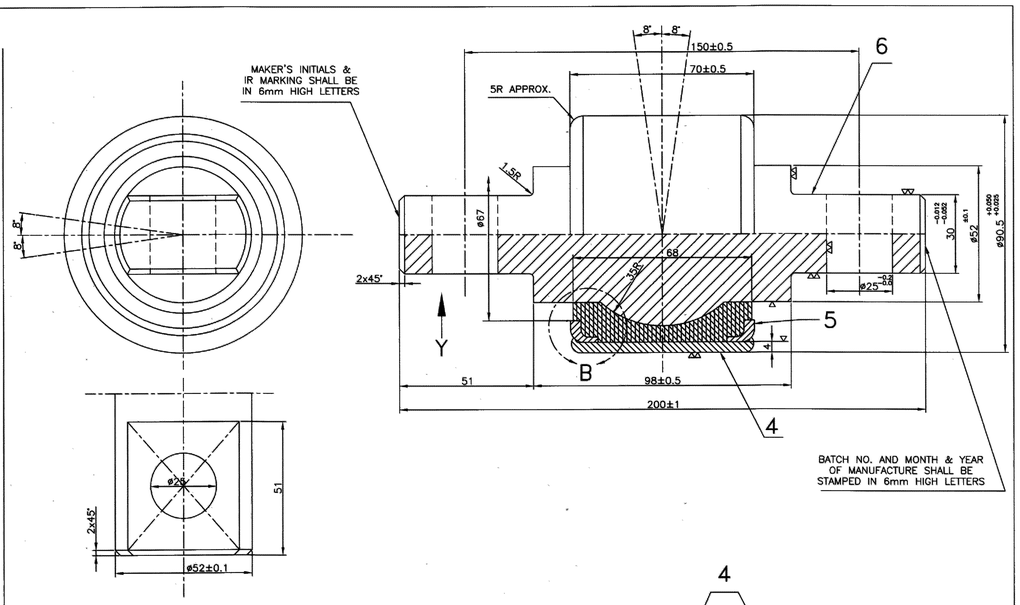

VIEW AT 'Y'

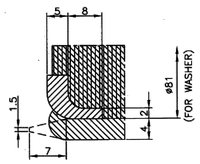

DETAIL AT 'B'

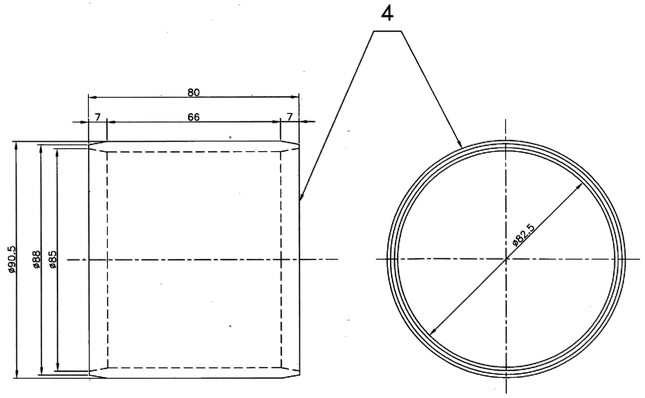

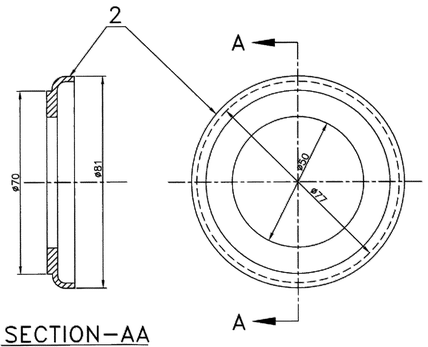

SECTION–AA

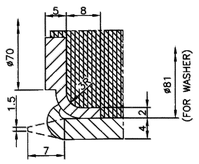

DETAIL AT 'A'

SILENT BLOCK–TYPE 'A'

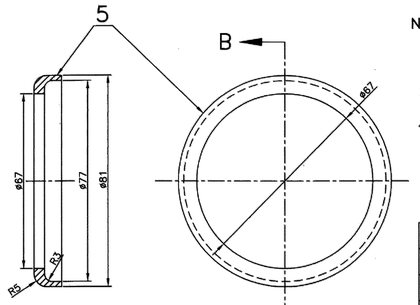

SECTION–BB

NOTE:–

1. THIS SILENT BLOCK IS APPLICABLE FOR ALL B.G. ICF COACHES
2. FOR SCHEDULE OF TECHNICAL REQUIREMENTS REFER RDSO SPEC. C–9406 (REV.–II)
3. FOR UNTOLERANCED DIMENSIONS, THE TOLERANCE AS LAID DOWN IN. IS:2102 (PART.1) MEDIUM CLASS SHALL BE FOLLOWED
4. ITEM NO. 1,2&3 PERTAINS TO SILENT BLOCK 'TYPE–A' (SLOTTED DESIGN)
5. ITEM NO. 4,5&6 PERTAINS TO SILENT BLOCK 'TYPE–B' (BOLTED DESIGN)

ITEM	DESCRIPTION & DIMENSIONS	No. OFF	REF. DRG.	WT. OF ONE kg	MTL. & SPEC.	REMARKS
6	CENTRAL SHAFT	1			IS:1875 CL–4	C–9406 REV.–II
5	END WASHER	2			IS:2062 Fe410A	–DO–
4	SEAMLESS STEEL TUBE	1			UTS–410 MPa	–DO–
3	CENTRAL SHAFT	1			IS:1875 CL–4	C–9406 REV.–II
2	END WASHER	2			IS:2062 Fe410A	–DO–
1	SEAMLESS STEEL TUBE	1			UTS–410 MPa	–DO–

SILENT BLOCK–TYPE 'B'

ALT.	ITEM	AUTHY.	DESCRIPTION	CKD.	DATE
②		SS/48/12	BOLTED DESIGN INCLUDED		12/2012
①		CD/2/01	DRAWING REVISED		12/2001

ASSEMBLY DRGS.

REFERENCE :–

CDIC No.

SUPERSEDED BY :

SUPERSEDES :

SCALE 1:1 — P — C — D — J.S. SS/48/12

B.G. — R.D.S.O. [CG]

INDIAN RAILWAY STANDARDS

SILENT BLOCK FOR ANCHOR LINK

SKETCH–94101

Signature Not Verified
Digitally signed by MANOJ KUMAR
Date: 2026.01.15 17:43:40 IST
Reason: IREPS Document
Location: IREPS-CRIS

यह आरेख अनुसंधान अभिकल्प और मानक संगठन रेल मंत्रालय लखनउ 226011 भारत की संपत्ति है और पूर्व लिखित अनुमति के बिना इसका आंशिक या पूर्ण रूप से प्रयोग वर्जित है। ©