5/1

ALT.NO	ALT.DATE	ZONE	ALTERATIONS	AUTHORITY
a	09/09/2020	ALL	1. LED LIGHT FITTING FOR SLR COACHES SPECIFIED AS TYPE-J1. (SHEET-1/2). 2. LED LIGHT FITTING WITH STAINLESS STEEL HOUSING FOR LVPH COACHES SPECIFIED AS TYPE-J2. (SHEET-2/2).	CHANGE REQUEST NO. ED/CR/2020-0009

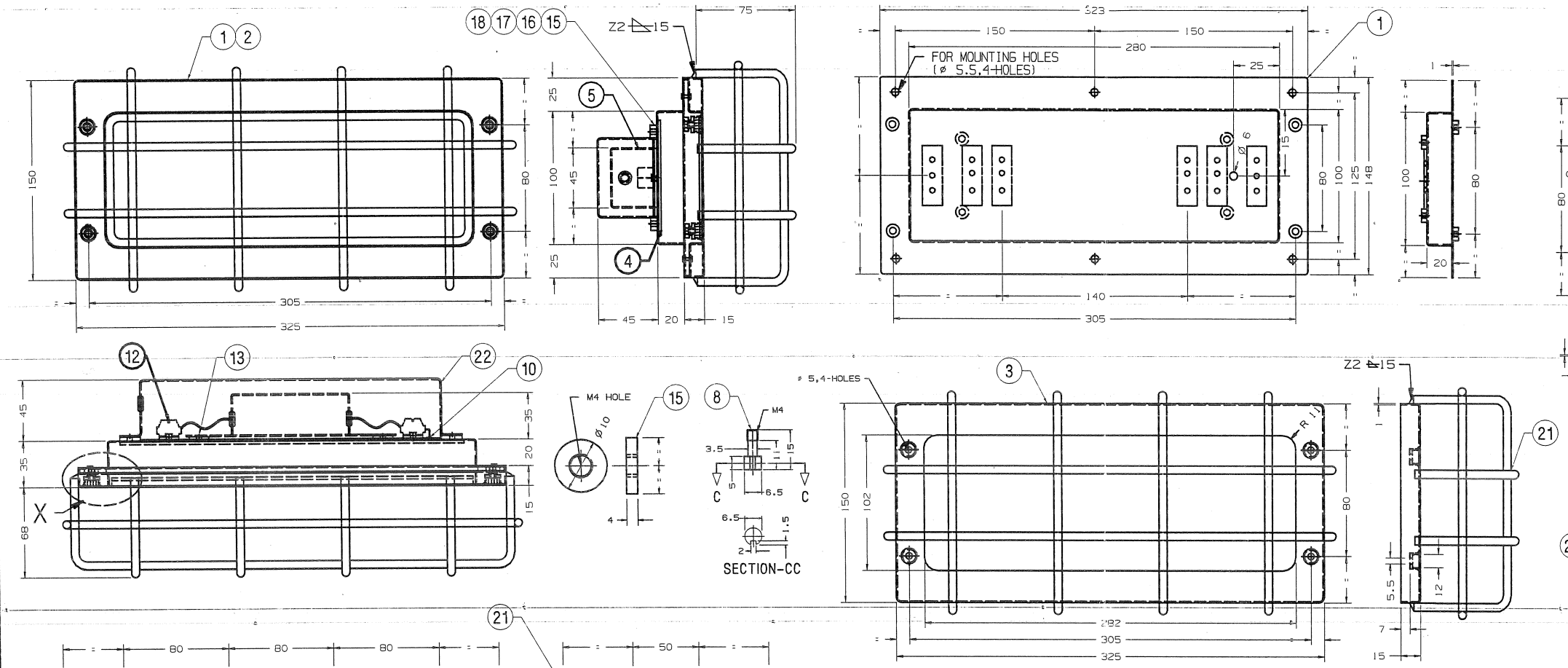

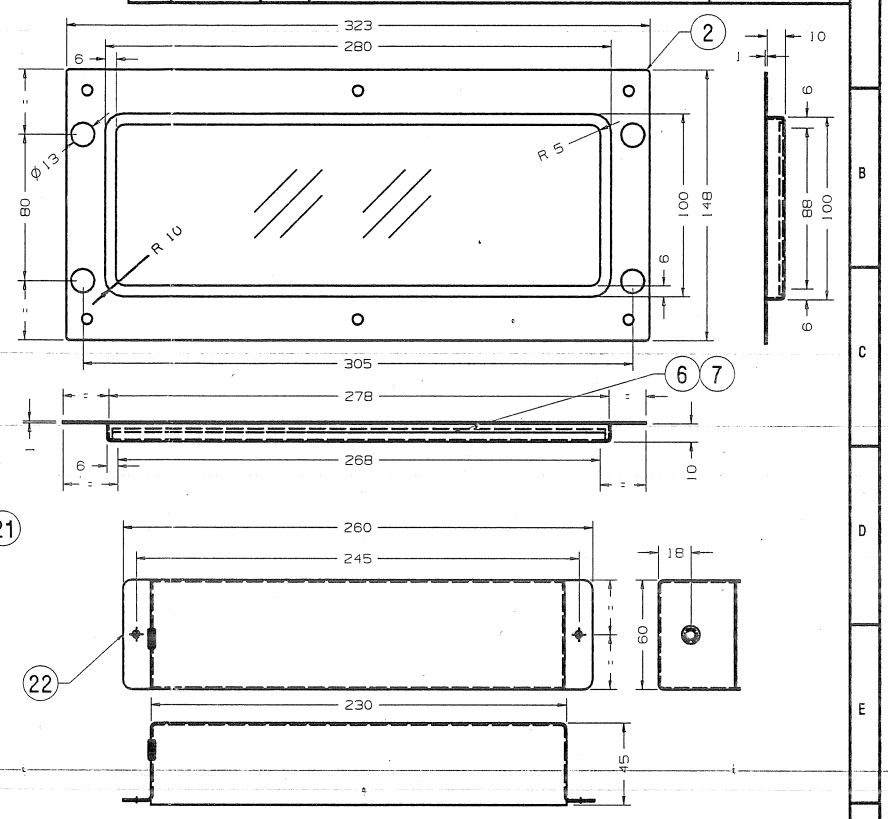

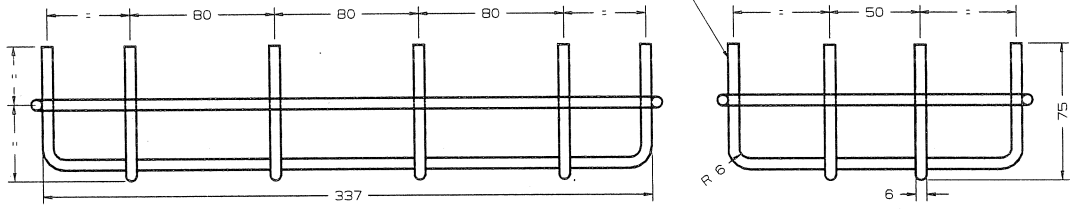

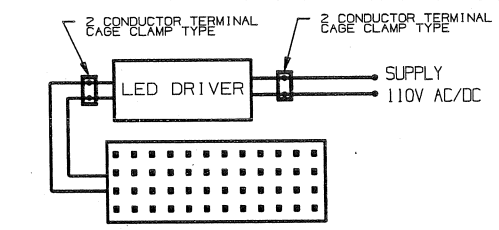

SCHEMATIC DIAGRAM FOR LED LIGHT
(FOR REFERENCE ONLY)

TABLE-1
DETAILS OF TERMINAL CONNECTOR

DESCRIPTIONS	CAT.NO.& QTY.	QTY.
2-CONDUCTOR TERMINAL STRIP	261-102 OF M/S WAGO OR SIMILAR IN PHOENIX MAKE.	2

ITEM	DESCRIPTION & DIMENSIONS	QPASSLY	DETAIL DRG	MATL. & SPEC.	REMARKS
22	COVER FOR LED DRIVER.	1	IS: 6911-1992	SS-304 L / SS-304 S2	NIL
21	WIRE MESH GUARD 6MM S.S. WIRE.	1	NIL	SS-304 L / SS-304 S2	NIL
20	DOME KEY	1	CC76052	NIL	NIL
19	SCREWING PIECE 2X15X45MM	6	IS: 6911-1992	SS-304 L / SS-304 S2	NIL
18	SPRING WASHER M4	6	IS: 3063 (LATEST) T-1,TY-B	IS: 4072 (LATEST) GRADE-3	NIL
17	PLAIN WASHER Ø 4.5	6	IS: 2016 (LATEST) T-3,TY-B	IS: 1367 (LATEST) P-14,A2-70	NIL
16	CH.HD SCREW AM4X6	6	IS: 1366 (LATEST) 4.8,T-1	IS: 1367 (LATEST) P-14,A2-70	NIL
15	ROUND BOSS Ø 10X4 (M4)	8	IS: 6911-1992	SS-304 L / SS-304 S2	NIL
14	RIVET	14	IS: 2907 (LATEST) TAB-3,TY-3	ALUMINIUM	NIL
13	CH.HD SCREW AM3X6	4	IS: 1366 (LATEST) 4.8,T-1	IS: 1367 (LATEST) P-14,A2-70	NIL
12	2-CONDUCTOR TERMINAL STRIP	1	NIL	NIL	SEE NOTE-3
11	EPDM SPONGE (3MM)	1	NIL	NIL	SEE NOTE-6
10	GROMMET	4	NIL	NIL	SEE NOTE-7
9	CIRCLIP	4	IS: 3075 (LATEST) TY-E,PT-3	NIL	NIL
8	CAPTIVE SCREW	4	IS: 6911-1992	SS-304 L / SS-304 S2	NIL
7	TOUGHNED GLASS THICKNESS=3-4MM.	1	NIL	NIL	SEE NOTE-13
6	PLAIN DIFFUSER THICKNESS >1.5MM.	1	NIL	POLYCARBONATE	SEE NOTE-12
5	LED DRIVER	1	NIL	NIL	SEE NOTE-11
4	PCB FOR LED	1	NIL	NIL	NIL
3	DIFFUSER COVER THICKNESS-1MM	1	IS: 6911-1992	SS-304 L / SS-304 S2	SEE NOTE-8
2	COVER THICKNESS-1MM	1	IS: 6911-1992	SS-304 L / SS-304 S2	SEE NOTE-8
1	FRAME 1MM	1	IS: 6911-1992	SS-304 L / SS-304 S2	SEE NOTE-8

13. THE TOUGHENED GLASS OF THICKNESS 3-4mm OF M/S SAINT GOBAIN/ASAHI INDIA/BOROSIL OR EQUIVLENT MAKE (PRIOR APPROVAL SHALL BE TAKEN FROM CEDE RCF/KXH) SHALL BE PROVIDED ON OUTSIDE OF POLYCARBONATE DIFFUSER IN COVER i.e. ITEM-2 TO ACHIVE 80% TRANSPARENCY AND COMPLETE DIFFUSION OF LIGHT SO THAT LIGHT SOURCE/SPOT IS NOT VISIBLE.
12. DIFFUSER MATERIAL SHALL BE CONFORMING TO UL 94VO & MADE FROM 'LEXAN SP24-492X' FIRE RETARDANT POLYCARBONATE MATERIAL OF GE PLASTIC/SABIC MAKE OR EQUIVALENT WITH PRIOR APPROVAL OF CEE. DIFFUSER THICKNESS SHALL NOT BE LESS THAN 1.5MM. AND SHALL BE FREE FROM SCRATCHES, AIR BUBBLES, HOLES AND ULTRA-VIOLET STABILIZED.
11. HOUSING OF THE LED DRIVER SHALL BE MADE FROM 1MM. THICK STAINLESS STEEL SHEET MATERIAL TO SS-304 L/SS 304 S2 WITH DIMENSIONS FOR MAIN LED DRIVER (160X45X35MM. MAX.) AND MOUNTING DIMENSIONS FIXED TO 140MM.
10. WIRING TO BE DONE WITH 1.0 SQ.MM. PTFE CABLE OR E-BEAM CABLE OF RDSO APPROVED MAKE ONLY.
9. SCHEMATIC DIAGRAM, MANUFACTURER'S INSIGNIA SHALL BE SCREEN PRINTED ON ALUMINIUM PLATE AND PURCHASE ORDER AND S.NO. IN THE FORM OF 'YYYYMMNNN' WHERE 'YYYY' STAND FOR YEAR 'MM' STAND FOR MONTH AND 'NNN' STAND FOR RUNNING SERIAL NO. SHALL BE PUNCHED ON IT AS SHOWN IN LEGEND PLATE AND RIVETTED AT THE BACK SIDE OF THE FITTING.
8. ITEM-1, 2 & 3 SHOULD BE DEEP DRAWN AND NOT FABRICATED.
7. SUITABLE FIRE PROOF GROMMETS TO BE PROVIDED FOR CABLE TRAVERSING TO THE LED DRIVER.
6. 3mm. EPDM SPONGE MAY BE IN SINGLE PIECE TO BE GLUED ALL AROUND AT LOCATIONS INDICATED ON DRAWING.
5. ONLY TIG/SPOT WELDING SHALL BE DONE AS PER THE REQUIREMENT. NO OTHER WELDING IS ACCEPTABLE.
4. DOME KEY SHALL BE SUPPLIED ONE NUMBER FOR EVERY 10 FITTINGS AS PER DRG.NO.CC76052.
3. TERMINAL CONNECTOR SHALL BE OF CAGE CLAMP TYPE WAGO/PHOENIX MAKE AS INDICATED IN TABLE-1.
2. FRAMED DIMENSIONS ARE TO BE STRICTLY ADHERED TO BY JIG PUNCHING.
1. ALL DIMENSIONS IN MM.

NOTE:

ANY MANUAL ALTERATION SHALL AUTOMATICALLY RENDER THIS DRAWING INVALID. IN DETAIL DRGS STARTING WITH "LI" ARE INTERNAL REFERENCE LISTS ONLY AND ARE NOT FOR ISSUE.

FOR UNTOLERANCED DIMENSIONS REFER MDG0008 | DATE OF FIRST ISSUE 20/05/2016

WELD LENGTH		GROUP	SUPERSEDES: NIL
NIL	M	FILE	D:\Bikram\cc\cc76457s2a.prt
WEIGHT NIL	KG		
S.AREA NIL	M²		
LENGTH/DIA NIL	M		
WIDTH/THICK. NIL	M		
HEIGHT NIL	M		

LED LIGHT FITTING FOR LVPH COACH, TYPE-J2 (9W)
(AS PER SPEC.NO.RDSO/PE/SPEC/TL/0091-2016,REV.1)

RAIL COACH FACTORY, KAPURTHALA

रेलकोच फैक्टरी कपूरथला | IRS

SEE/D&D | DY.CEE/D&D

SCALE | SSE/ED | CHD | DRN

REF.DRG.No. NIL

PL NO. NIL

DRG NO. CC76457

ALT. a | SIZE A4 | SHEET 2/2

Signature Not Verified
Digitally signed by DAYANAND BHARDWAJ
Date: 2026.05.15 15:50:14 IST
Reason: IKEEPS Document
Location: IRSE SCRIS

ALT.NO	ALT.DATE	ZONE	ALTERATIONS	AUTHORITY
b	17/07/2020	G-12	1. DIMENSION OF 132MM CHANGED TO 142MM.	CHANGE REQUEST NO. ED/CR/2020-0009

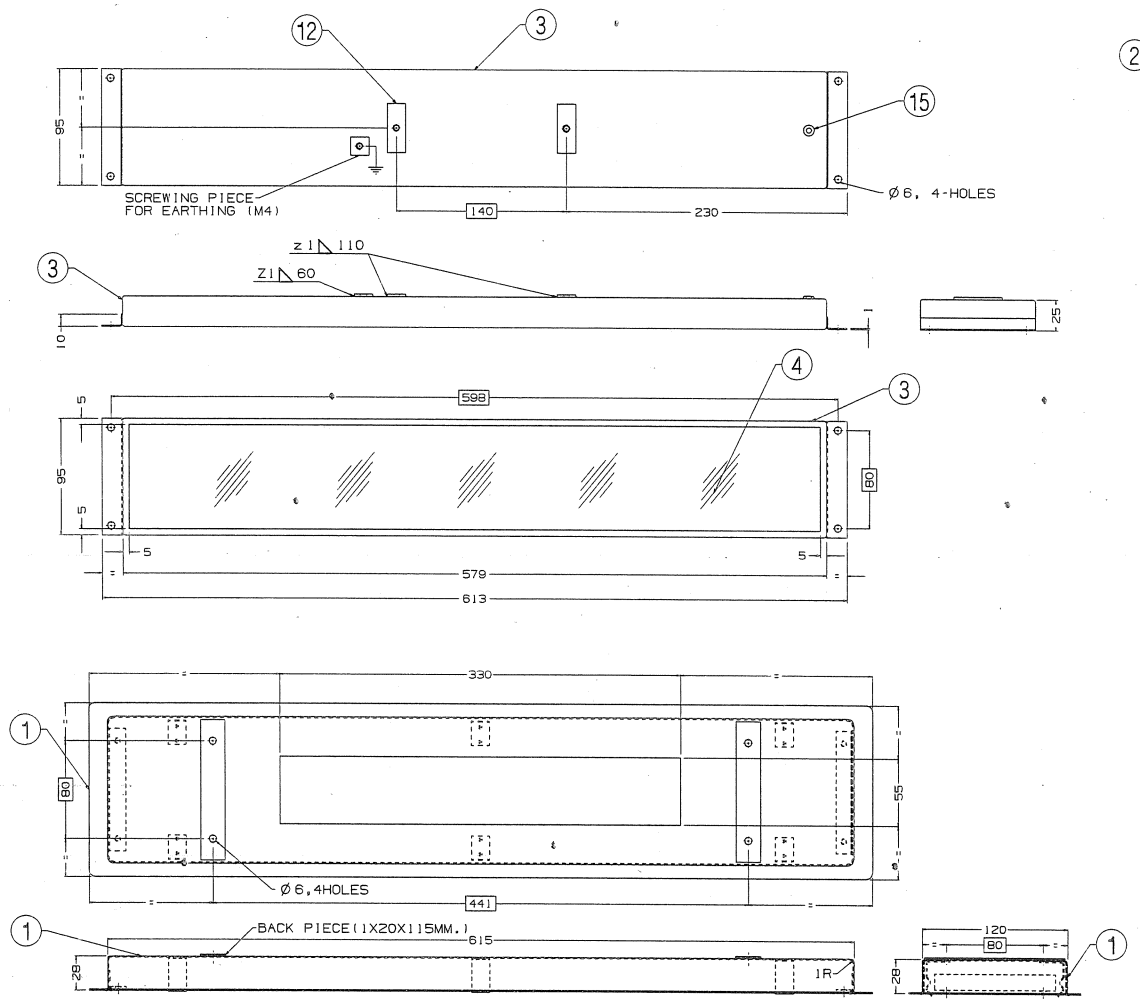

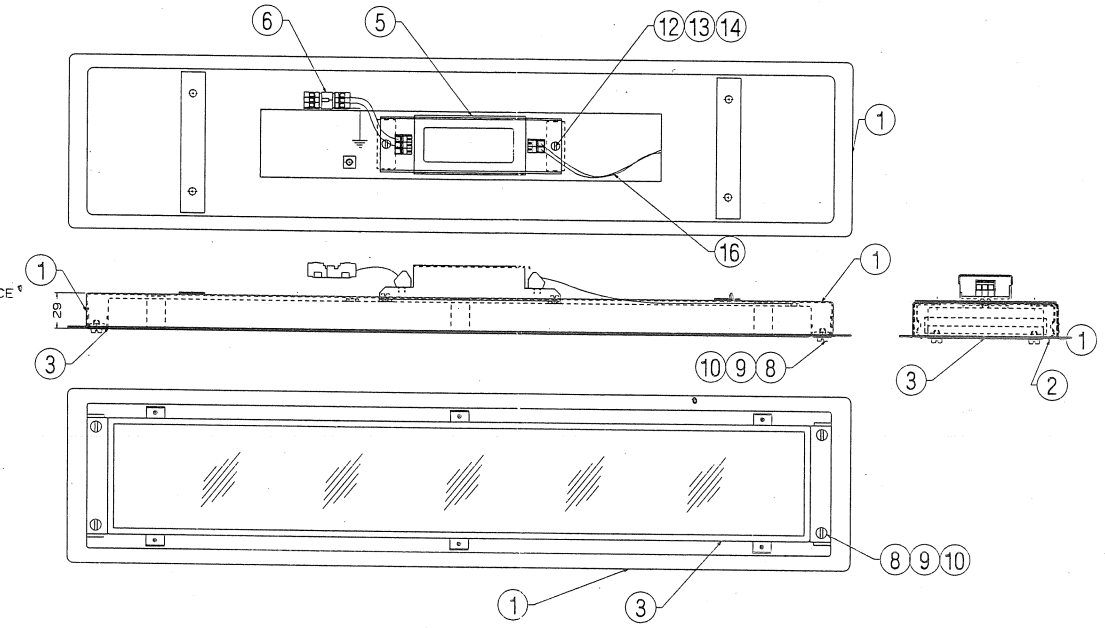

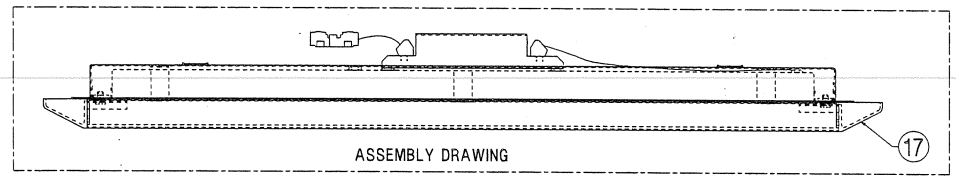

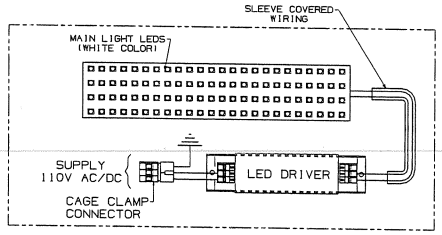

SCHEMATIC DIAGRAM FOR LED LIGHT (FOR REFERENCE ONLY)

17	DIFFUSER	1	LW76105	NIL	NIL
16	FIRE RETARDENT SLEEVE THICKNESS 1MM.	1	NIL	NIL	AS REQUIRED
15	GROMMET	1	NIL	IS: 5270(LATEST) TAB-1,TYPE-2	A=8, E=1
14	PLAIN WASHER Ø 4.5	2	IS: 2016(LATEST) TYPE-B	IS: 1367(LATEST) P-14,A2-70	NIL
13	SPRING WASHER M4	2	IS: 3063(LATEST) TYPE-B	IS: 4072(LATEST) GRADE-3	NIL
12	CHEESE HD.SCREW M4	3	IS: 1366(LATEST) TAB.-1	IS: 1367(LATEST) P-14,A2-70	NIL
11	SCREWING PIECE 2X15X40	4	NIL	IS: 1079(LATEST) FE-410	NIL
10	PLAIN WASHER Ø 5.5	4	IS: 2016(LATEST) TYPE-B	IS: 1367(LATEST) P-14,A2-70	NIL
9	SPRING WASHER M5	4	IS: 3063(LATEST) TYPE-B	IS: 4072(LATEST) GRADE-3	NIL
8	CHEESE HD.SCREW M5X10	4	IS: 1366(LATEST) TAB.-1	IS: 1367(LATEST) P-14,A2-70	NIL
7	MOUNTING BRACKET 1MM. THICK	2	NIL	IS: 1079(LATEST) FE-410	NIL
6	TERMINAL CONNECTOR CAGE CLAMP TYPE	1	NIL	NIL	SEE NOTE-5
5	LED DRIVER	1	NIL	NIL	SEE NOTE-13
4	PLAIN DIFFUSER THICKNESS >1.5MM.	1	NIL	POLYCARBONATE	SEE NOTE-14
3	LED MODULE BOX THICKESSS 1MM.	1	NIL	IS: 513(LATEST) GRADE-DD	SEE NOTE-4
2	SPRING 1X15X52	6	NIL	IS: 2507(LATEST) GRADE-5	SEE NOTE-9 & 10
1	FRAME 1MM. THICK	1	NIL	IS: 513(LATEST) GRADE-DD	SEE NOTE-4

LEGEND PLATE

MANU. INSIGNIA	DATE:	SCHEMATIC DIAGRAM
	S.NO.	
P.O.NO.		

TABLE-1
DETAILS OF TERMINAL CONNECTOR

DESCRIPTIONS	CAT.NO.	QTY/FITTING
MALE CONNECTOR WITH CAGE CLAMP	(721-603) OF M/S WAGO OR SIMILAR IN PHOENIX MAKE	1
FEMALE CONNECTOR WITH CAGE CLAMP	(721-103/026-000) OF M/S WAGO OR SIMILAR IN PHOENIX MAKE	1

NOTE:-

14. DIFFUSER MATERIAL SHALL BE CONFORMING TO UL 94V/0 & MADE FROM 'LEXAN SP24-492X' FIRE RETARDANT POLYCARBONATE MATERIAL OF GE PLASTIC/SABIC MAKE OR EQUIVALENT WITH PRIOR APPROVAL OF CEE. DIFFUSER THICKNESS SHALL NOT BE LESS THAN 1.5MM. AND SHALL BE FREE FROM SCRATCHES, AIR BUBBLES, HOLES AND ULTRA-VIOLET STABILIZED.
13. HOUSING OF THE LED DRIVER SHALL BE MADE FROM 1MM. THICK ALUMINUM SHEET/FIRE RETARDANT POLYCARBONATE OR FIBER SHEET MATERIAL WITH DIMENSIONS FOR MAIN LED DRIVER (160X45X35MM. MAX.) AND MOUNTING DIMENSIONS FIXED TO 140MM.
12. TAPPING IN ITEM NO.-11 SHALL BE DONE AFTER WELDING SUITABLE WITH ITEM NO.-3.
11. ENTIRE WIRING AND NOTCHES SHALL BE COVERED WITH 1MM. THICK FIRE RETARDENT SLEEVES.
10. ITEM NO.-2 SHALL NOT GET LOOSE/DEFORMED/LACK ITS PHYSICAL PROPERTIES WHILE IN USE FOR ROLLING STOCK APPLICATION.
9. ITEM NO.-2 SHALL BE WELDED WITH ITEM NO.-1 TO SUIT PROPER CLAMPING OF ITEM NO.-17.
8. ONLY TIG/SPOT WELDING SHALL BE DONE AS PER THE REQUIRMENT.NO OTHER WELDING IS ACCEPTABLE.
7. SCHEMATIC DIAGRAM,MANUFACTURER'S INSIGNIA SHALL BE SCREEN PRINTED ON AL.PLATE AND P.O. NO. & S.NO. IN THE FORM OF 'YYYYMMNNN' WHERE 'YYYY' STANDS FOR YEAR,'MM' STANDS FOR MONTH AND 'NNN' STANDS FOR RUNNING S.NO.SHALL BE PUNCHED ON IT AS SHOWN IN LEGEND PLATE AND RIVETED AT THE BACK SIDE OF THE FITTING.
6. WIRING TO BE DONE WITH 1.0 SQ.MM. PTFE CABLE OR E BEAM CABLE OF RDSO APPROVED MAKE ONLY.
5. TERMINAL CONNECTOR SHALL BE OF CAGE CLAMP TYPE WAGO/PHOENIX MAKE AS INDICATED IN TABLE-1.
4. ITEM NO.-1 & 3 SHALL BE DEEP DRAWN AND NOT FABRICATED.
3. ALL STEEL ITEMS EXCLUDING HARDWARE SHALL BE GIVEN SURFACE TREATMENT FOR ANTI-RUST & ANTI-CORROSION BEFORE FINISHING WITH POWDER COATING.THICKNESS OF POWDER COATING SHALL NOT BE LESS THAN 60 MICRONS TO WHITE COLOUR (SHADE NO.042 "IFB WHITE" OF M/S BERGER OR SIMILAR I M/S ASIAN./ M/S NEROLAC MAKE PAINT) WITH GLOSSY FINISH.
2. FRAMED MOUNTING DIAMENSIONS ARE TO BE STRICTLY ADHERED TO BY JIG PUNCHING.
1. ALL DIMENSIONS IN MM.

ANY MANUAL ALTERATION SHALL AUTOMATICALLY RENDER THIS DRAWING INVALID.

FOR UNTOLERANCED DIMENSIONS REFER MDG0008

DETAIL DRGS STARTING WITH "LI" ARE INTERNAL REFERENCE LISTS ONLY AND ARE NOT FOR ISSUE.

DATE OF FIRST ISSUE 20/05/2016

WELD LENGTH	ITEM	DESCRIPTION & DIMENSIONS	QPASSLT	DETAIL DRG	MATL. & SPEC.	REMARKS
NIL M	GROUP	ELECTRICAL	SUPERSEDES:	LW76090 ALT a		
WEIGHT	FILE	D:\bikram\lw\lw76090b.prt				
NIL KG		LED LIGHT FITTING FOR PASSENGER AREA (CABIN) FOR LHB AC COACHES, TYPE-L (18W) (AS PER SPEC. NO. RDSO/PE/SPEC/TL/0091-2016,REV.1)			SCALE / SSE/ED	
S.AREA					CHD	
NIL M²					DRN	
~~LENGTH/DIA~~						
NIL M		RAIL COACH FACTORY, KAPURTHALA			REF.DRG.No. NIL	
~~WIDTH/THICK~~		रेलकोच फैक्टरी कपूरथला		IRS	PL NO. NIL	
NIL M					DRG.NO. LW76090	
WEIGHT						
NIL M		SEE/D&D		DY.CEE/D&D	ALT. b	SIZE A1 SHEET 1/1