Signature Not Verified
Digitally signed by ARVIND KUMAR SINGH
Date: 2026.04.23 18:37:01 IST
Reason: IRPS-CRIS
Location: New Delhi

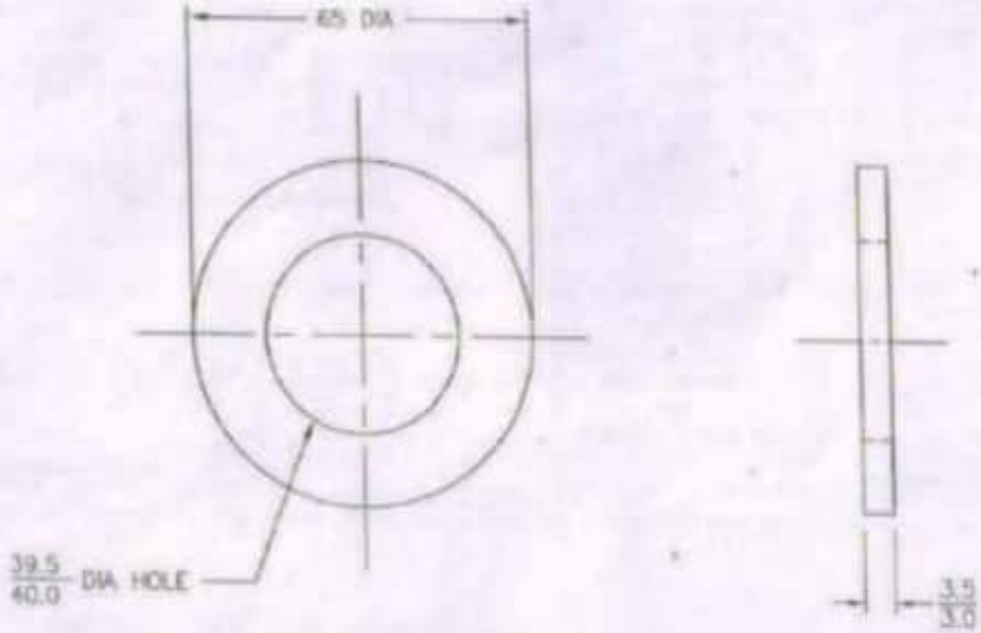

NO. OFF.	DESCRIPTION FOR ASSEMBLY.	NO.
6	LAYOUT FACING POINT 1 IN 12 TURNOUT B.G. ON P.S.C. SLEEPERS FITTED WITH IRS ELECTRIC Pt. M/C (60 Kg & 52 Kg)	RDSO/S 3261-62
6	LAYOUT FACING POINT B.G. FITTED WITH HIGH THRUST ROTARY LOCK TYPE POINT M/C (WITH PIN JOINT) (52 Kg & 90 R)	RDSO/S 3262-63
8	LAYOUT FACING POINT 1 IN 12 TURNOUT B.G. WITH THICK WEB TONGUE RAIL ON PSC SLEEPERS FITTED WITH IRS POINT MACHINE 220 mm STROKE (60 Kg & 52 Kg)	RDSO/S 3465-66
2	LAYOUT 1 IN 12 TURNOUT B.G. 60 Kg. (WITH ZUI-60 THICK WEB TONGUE RAIL) ON PSC SLEEPERS FITTED WITH IRS Pt. M/C (220 mm STROKE) FOR INDEPENDENT SWITCH LOCKING & CLAMP POINT LOCK (150 mm) THROW OF POINT)	RDSO/S 3454
8	B.G. 53 Kg (WITH ZU 2-49 THICK WEB TONGUE RAIL)	RDSO/S 3455

R. D. S. O.

INSULATING WASHER

MATL & SPEC	THERMOPLASTIC POLY URETHANE MOULDED INSULATION RDSO/SPN/5/168/02 IRS : S 23
SCALE	MILLIMETRES 10 0 20 40 DO NOT SCALE

1. ALL DIMENSIONS IN MILLIMETRES.

NOTE

ALT.	DESCRIPTION	DATE

STAND
CANCLD.
REVD.

8640/2

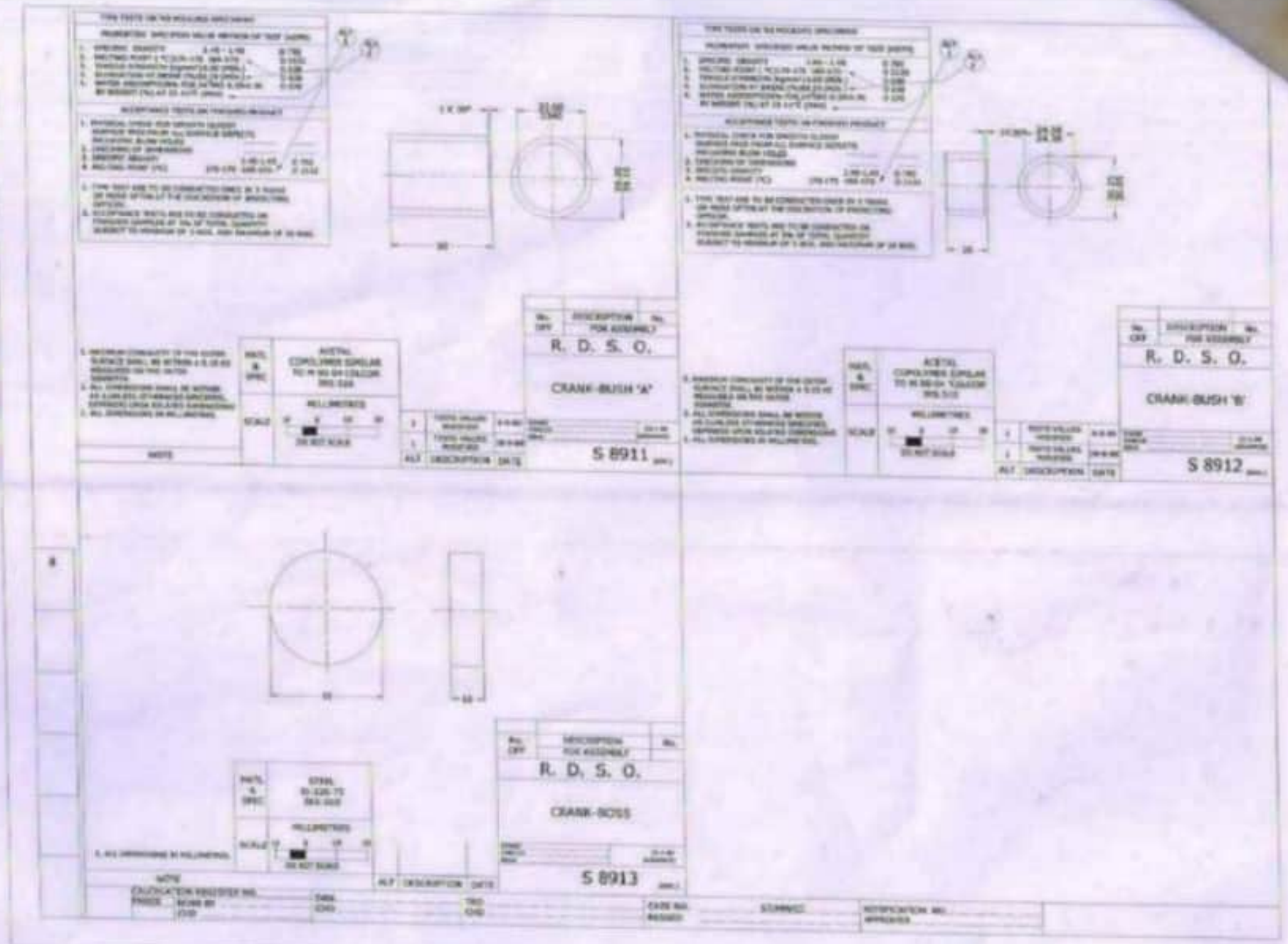
R. D. S. O.
CRANK-BUSH 'A'
S 8911
R. D. S. O.
CRANK-BUSH 'B'
S 8912
R. D. S. O.
CRANK-BOSS
S 8913

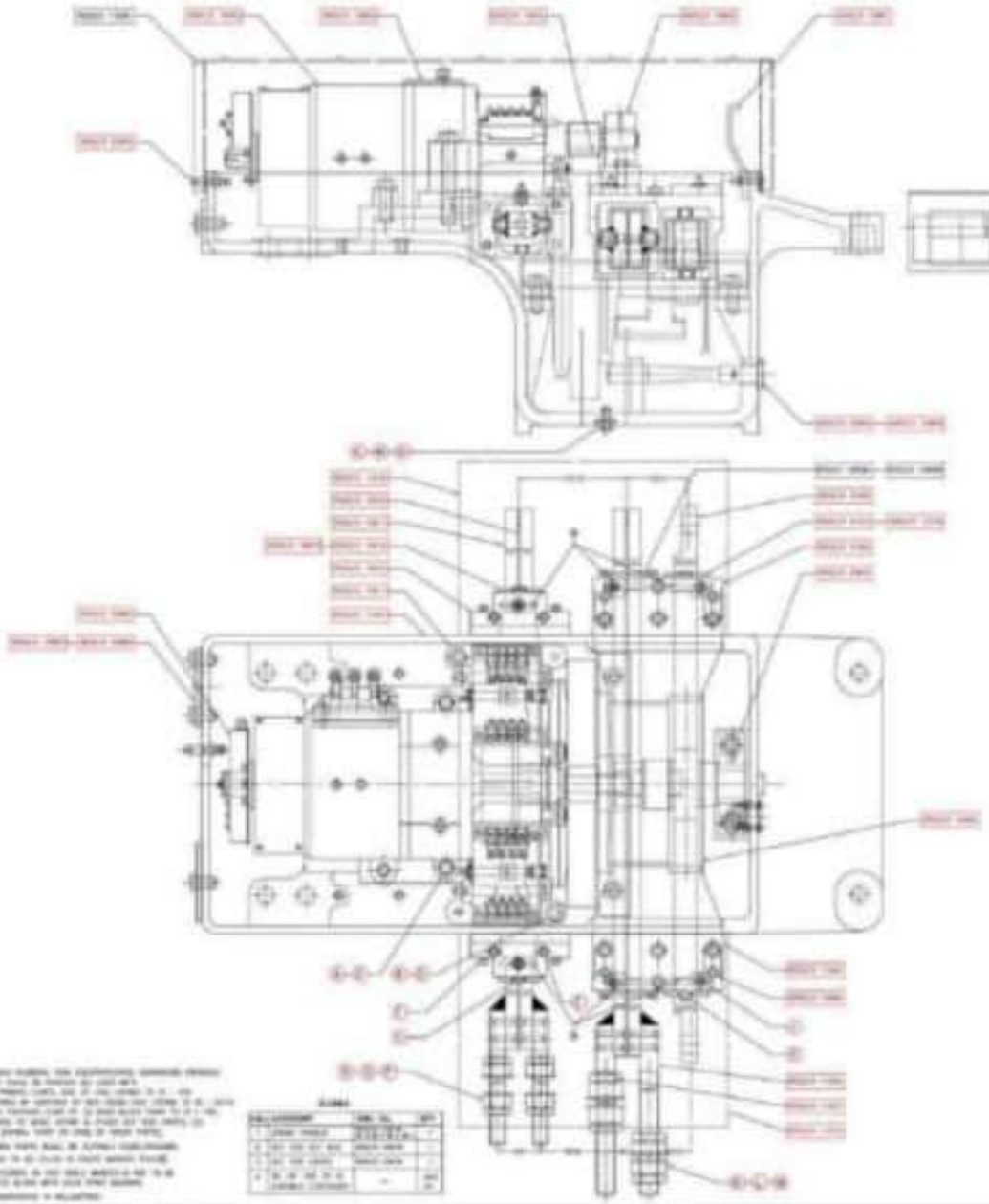

PART NO.	DESCRIPTION	NO. REQD
	R. D. S. O.	

HIGH THRUST ROTARY LOCKING TYPE
POINT MACHINE
220mm STROKE

RDSO/S 11000

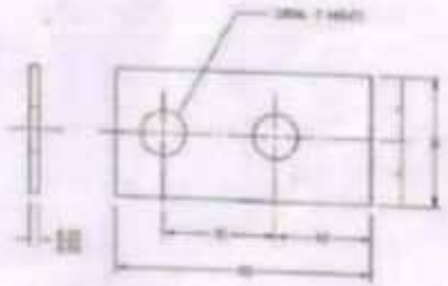

NO.	DESCRIPTION	NO.
OFF	FOR ASSEMBLY	

R. D. S. O.

INSULATION PLATE
FOR
LEADING STRETCHER BAR

S 8504

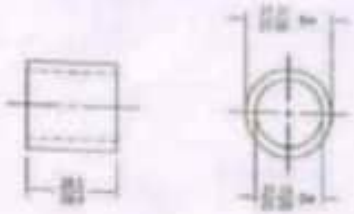

NO.	DESCRIPTION	NO.
OFF	FOR ASSEMBLY	

R. D. S. O.

SWITCH EXTENSION
BRACKET
-INSULATION BUSH

S 23199

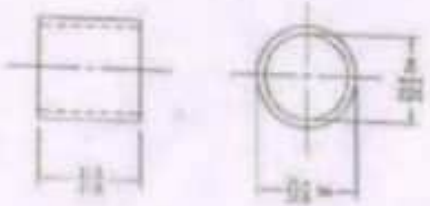

NO.	DESCRIPTION	NO.
OFF	FOR ASSEMBLY	

R. D. S. O.

LOCK & DETECTOR ROD
-BUSH
(FOR THICK WEB SWITCHES)

S 22179

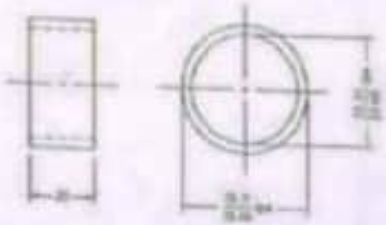

NO.	DESCRIPTION	NO.
OFF	FOR ASSEMBLY	

R. D. S. O.

DRIVE ROD LOC
- BUSH
(FOR THICK WEB SWITCHES)

RDSO/S 3463

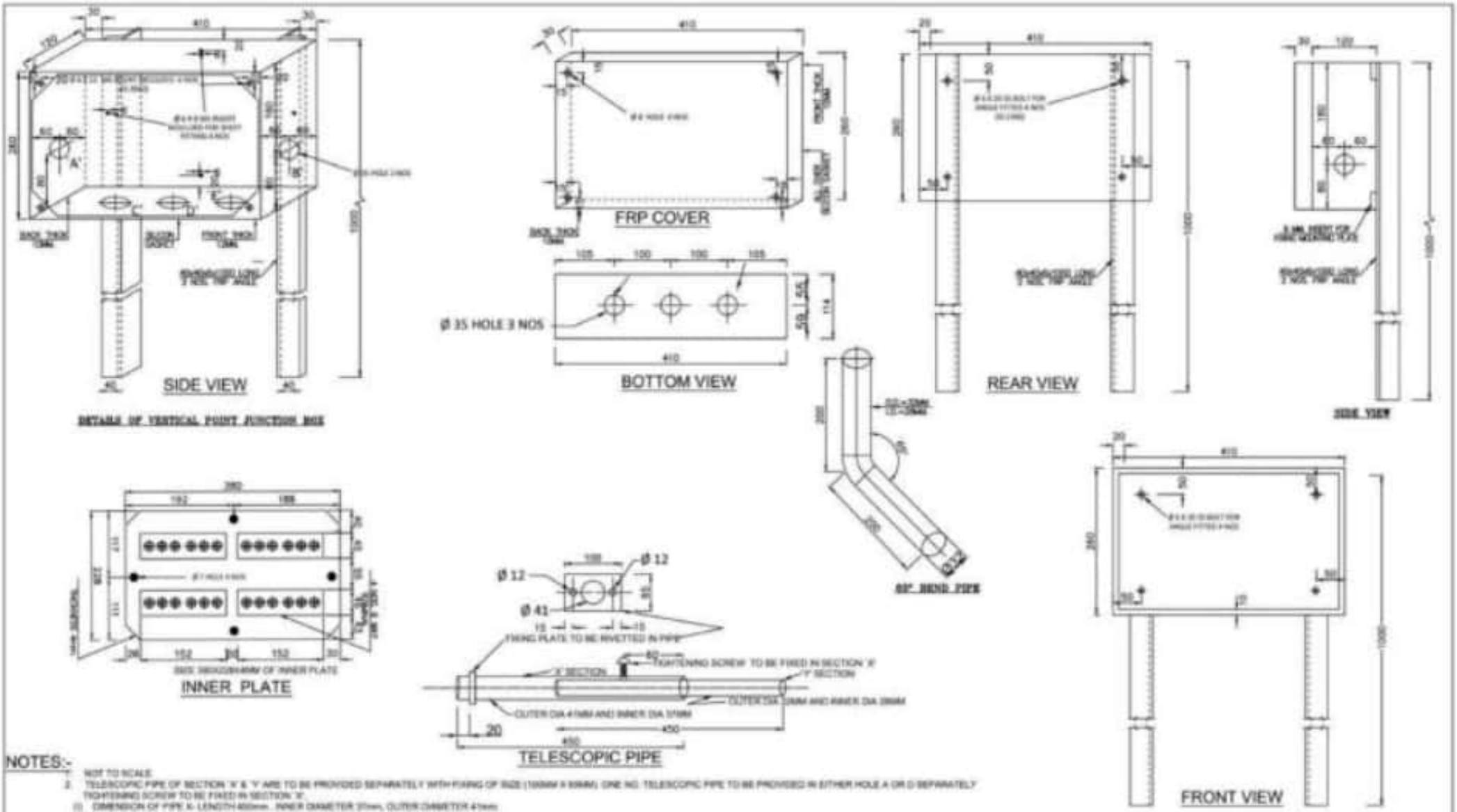

NOTES:-

1. NOT TO SCALE.
2. TELESCOPIC PIPE OF SECTION 'X' & 'Y' ARE TO BE PROVIDED SEPARATELY WITH FIXING OF SIZE (100MM X 60MM). ONE NO. TELESCOPIC PIPE TO BE PROVIDED IN EITHER HOLE A OR D SEPARATELY. TIGHTENING SCREW TO BE FIXED IN SECTION 'X'.
   (i) DIMENSION OF PIPE 'X'- LENGTH-400mm, INNER DIAMETER 37mm, OUTER DIAMETER 47mm.
   (ii) DIMENSION OF PIPE 'Y'- LENGTH-450mm, INNER DIAMETER 28mm, OUTER DIAMETER 32mm.
3. ALL DIMENSION ARE IN MILLIMETER.
4. EXTERNAL SIZE OF JUNCTION BOX IS 280 X 410 X 1000 mm INCLUDED COVER.
5. THICKNESS OF INSIDE FRP SHEET 10mm.
6. DIMENSION OF FRP ANGLE ARE (40 X 40 X 6) AND 1000 mm LONG.
7. ALL INSERTS WILL BE OF M.S.
8. AS PER RDSO SPEC NO.RDSO/SPN/151/1991.
9. 'A' AND 'B' ARE BREAKABLE SLOTS(50mm) FOR HOLE FOR HOUSING TELESCOPIC PIPE.
10. C , D AND 'E' ARE PERMANENT HOLES (35mm) WITH 3 NOS BEND GI PIPE.
   (A) SIZE (280mm(L)X280mm(B)X40mm) OF INNER PLATE. FOUR(4) NOS PBT TERMINAL 2 WAY TYPE SHALL BE PROVIDED DULY FITTED WITH 4 NOS. OF 8mm X10mm SS BOLT WITH WASHER IN POINT ,B.
   (B) BEND G.I. PIPE (300mm HT X 32mm DIA ,3mm THICK.) WITH ONE SIDE THREAD & HEXAGONAL NUT FOR FIXING IN P.T. ,B.

AS PER INSTRUCTION OF PCSTE/ER NP-90 OF FILE No. SG.42/2/PT.III	E.R	APPROVED		CHECKED				DRAWN	SCALE	TYPICAL DRAWING FOR VERTICAL POINT JUNCTION BOX.	DRG NO. SI./TYP/102
		BHANISH KUMAR AGRAWAL	Upendra Pratap Singh		SUMIT KUMAR	ANAND SHARMA	SURJEEN KUMAR RAUT	ARUP DATTA	NOT TO SCALE		SHEET NO.1
		(B.K.AGRAWAL)	(U.P.SINGH)	(R.SINGH)	(S.KUMAR)	(A.SHARMA)	(S.K.RAUT)	(A. DATTA)			
		PCSTE	CSE	DYCSTE/W/D&D/HQ	ASTE/D&D/HQ	ASTE/D&D/II/HQ	AM/SW/HWH	SSE/D			

S&T Drawing

Chapter - 7

Track Circuit equipments.

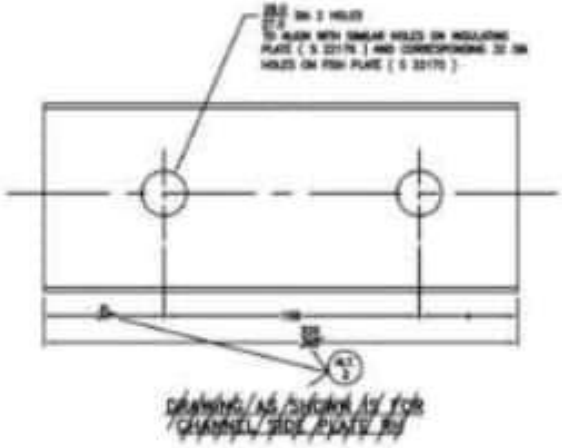

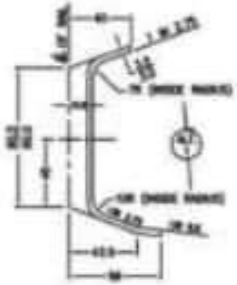

DRG. NO.	DESCRIPTION
S 22172	CHANNEL SIDE PLATE LHS
S 22174	CHANNEL SIDE PLATE RHS

DRAWING AS SHOWN IS FOR CHANNEL SIDE PLATE RH

3. FINISHED FINE ALL OVER.
2. ALL DIMENSIONS SHALL BE WITHIN ± 1.0, UNLESS OTHERWISE SPECIFIED.
1. ALL DIMENSIONS IN MILLIMETRES.

NOTE

MATL & SPEC	NYLON-TYPE 66 IRS : 540 IRS : 523				
SCALE	MILLIMETRES DO NOT SCALE				
		2	DIMENSION 325 ALTERED AS 325, 324 T1, DWG NO.S-22174 & TABLE DELETED(+-) MODEL HEADING, DWG. RELABEL NO. OF SHEETS	25.11.69	
		1	MODEL FRAME ADDED	1-4-69	
		ALT.	DESCRIPTION	DATE	

+ ROUGHNESS NUMBER IN MICRONS.

1	INSULATED RAIL JOINT,BG Kg. (S22171)
No. DFF	DESCRIPTION / FOR ASSEMBLY — NO.

R. D. S. O.

INSULATED RAIL JOINT – CHANNEL SIDE PLATE ~~LH & RH~~

DRAWN / CHECKED / APPD. — 10.9.74 (ADVANCE)

S 22173 – ~~24~~ (ADV.)

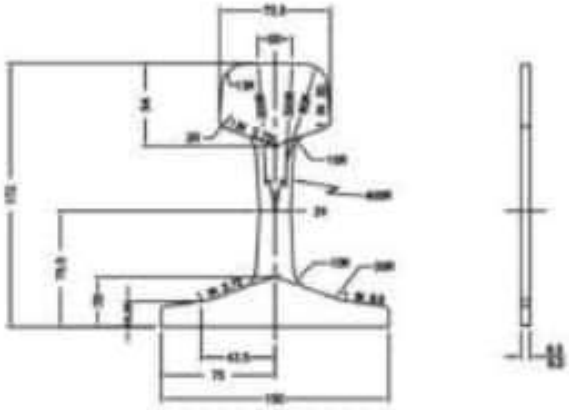

3. FINISHED FINE ALL OVER.
2. ALL DIMENSIONS SHALL BE WITHIN ± 1.0, UNLESS OTHERWISE SPECIFIED.
1. ALL DIMENSIONS IN MILLIMETRES.

NOTE

MATL & SPEC	NYLON-TYPE 66 IRS : 540 IRS : 523			
SCALE	MILLIMETRES DO NOT SCALE			
		ALT.	DESCRIPTION	DATE

+ ROUGHNESS NUMBER IN MICRONS.

1	INSULATED RAIL JOINT,BG Kg. (S22171)
No. DFF	DESCRIPTION / FOR ASSEMBLY — NO.

R. D. S. O.

INSULATED RAIL JOINT– END POST

DRAWN / CHECKED / APPD. — 10.9.74 (ADVANCE)

S 22175 (ADV.)

CALCULATION REGISTER No. ..... PAGES ..... DONE BY ..... CHD. .....
DRN. ..... CHD. .....
TRG. HARDNESS DRGN. ..... CHD. .....
CASE No. STS/X/154/Design ..... PASSED .....
NOTIFICATION No. ..... APPROVED .....
DRG. NO. + INCLUDES UPTO ALT NO. + OF THE ORIGINAL +

SDO 593

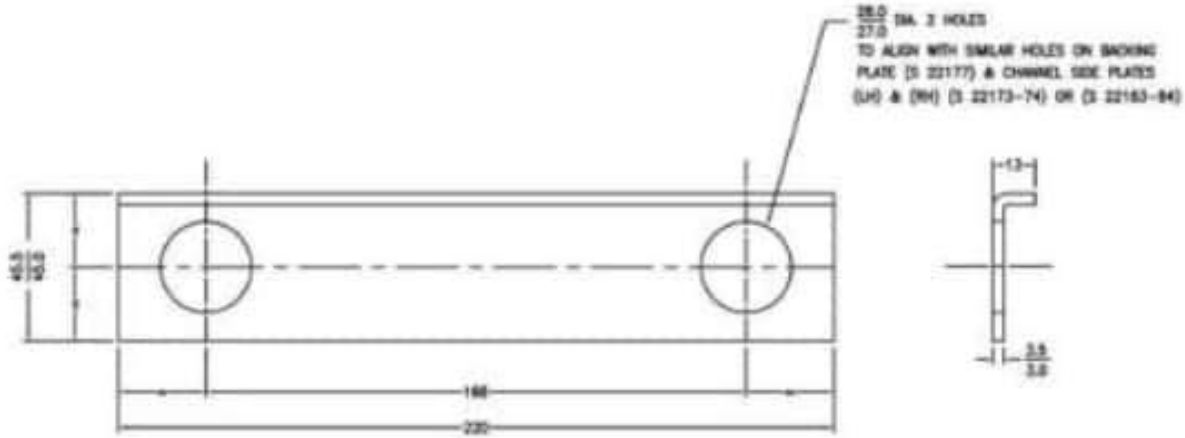

2. FINISHED FINE ALL OVER.
3. ALL DIMENSIONS SHALL BE WITHIN ± 1.0, UNLESS OTHERWISE SPECIFIED.
1. ALL DIMENSIONS IN MILLIMETRES.

NOTE

FILED OR ROUGH GROUND	MACHINE FINISH (ROUGH) 40T/30	MACHINE FINISH (MEDIUM) 16T/40	MACHINE FINISH (FINE) UPT/16	GROUND	HARDENED GROUND	MATL. & SPEC	NYLON-TYPE 66 IRS : 540 IRS : 523
* ROUGHNESS NUMBER IN MICRONS.						SCALE	MILLIMETRES 10 0 10 20 30 DO NOT SCALE

No.	DESCRIPTION	NO.
4	INSULATED RAIL JOINT, 60 kg, LHC	SA22181
4	INSULATED RAIL JOINT, 60 kg	SA22171
QTY	FOR ASSEMBLY	

R. D. S. O.

INSULATED RAIL JOINT-
INSULATING PLATE

10.9.74 (ADVANCE)

S 22176 (ADV.)

ALT. DESCRIPTION DATE

2. ALL DIMENSIONS SHALL BE WITHIN ± 1.0, UNLESS OTHERWISE SPECIFIED.
1. ALL DIMENSIONS IN MILLIMETRES.

NOTE

FILED OR ROUGH GROUND	MACHINE FINISH (ROUGH) 40T/30	MACHINE FINISH (MEDIUM) 16T/40	MACHINE FINISH (FINE) UPT/16	GROUND	HARDENED GROUND	MATL. & SPEC	STEEL SHEET IS : 226 IRS : 510
* ROUGHNESS NUMBER IN MICRONS.						SCALE	MILLIMETRES 10 0 10 20 30 DO NOT SCALE

No.	DESCRIPTION	NO.
4	INSULATED RAIL JOINT, 60kg, LHC	SA22183
4	INSULATED RAIL JOINT, 60kg	SA22173
QTY	FOR ASSEMBLY	

R. D. S. O.

INSULATED RAIL JOINT-
BACKING PLATE

10.9.74 (ADVANCE)

S 22177 (ADV.)

ALT. DESCRIPTION DATE

CALCULATION REGISTER No.	DRN.	TRD.	CASE No. STS/X/BA/DESIGN	NOTIFICATION No.	ORIG. NO. INCLUDES (PTO) ALT NO. OF THE ORIGINAL
TRACE DONE BY	CHD.	CHD.	PASSED	APPROVED	- - - -

SDO 593

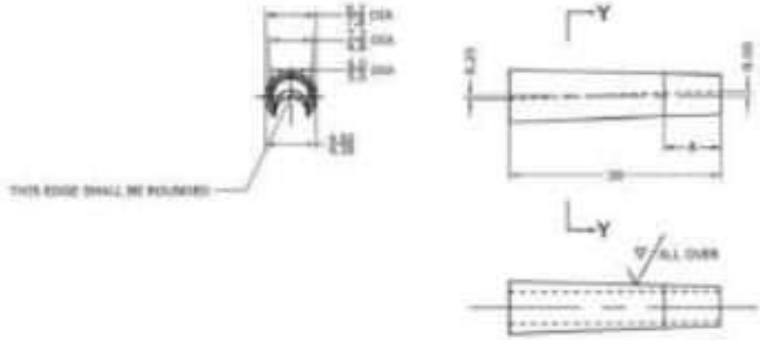

SECTION YY

5. PINS ARE TO BE COPPER OR TIN PLATED OR GALVANIZED.

4. DIMENSIONS AS SHOWN ARE WITH PLATING OR GALVANIZATION.

3. ENDS OF PINS TO BE AT RIGHT ANGLES TO THE AXIS.

2. ALL DIMENSIONS SHALL BE WITHIN ±0.5, UNLESS OTHER WISE SPECIFIED,DEPENDING UPON RELATED DIMENSIONS.

1. ALL DIMENSIONS IN MILLIMETRES.

NOTE

FILED OR ROUGH GROUND ▲ > 80	MACHINE FINISH (ROUGH) ▲40TO80	MACHINE FINISH (MEDIUM) ▲16TO40	MACHINE FINISH (FINE) ▲UPTO16	GROUND	HARDENED GROUND

▲ ROUGHNESS NUMBER IN MICRONS

MAT'L & SPEC: STEEL,CLASE C, IS : 994 (OR EQUAL TO ZC-230 BRS : S :17)

SCALE: MILLIMETRES 10 0 10 — DO NOT SCALE

No. OFF	DESCRIPTION FOR ASSEMBLY	No.

R. D. S. O.

CHANNEL PIN
SINGLE GROOVE, 7mm DIA.
(FOR 4mm DIA. BOND WIRE)

IRS (S)

S 69/M

ALT	DESCRITPION	DATE

DO NOT SCALE

1. ALL DIMENSIONS IN MILLIMETRES.

NOTE

FILED OR ROUGH GROUND ▲ > 80	MACHINE FINISH (ROUGH) ▲40TO80	MACHINE FINISH (MEDIUM) ▲16TO40	MACHINE FINISH (FINE) ▲UPTO16	GROUND	HARDENED GROUND

▲ ROUGHNESS NUMBER IN MICRONS

MAT'L & SPEC

SCALE — DO NOT SCALE

ALT	DESCRITPION	DATE

No. OFF	DESCRIPTION FOR ASSEMBLY	No.

R. D. S. O.

CALCULATION REGISTER No.	DRAWN BY	TRACED BY	CASE No.	NOTIFICATION No.
PAGES	DONE BY			
	CHECKED BY	CHECKED BY	PASSED BY	APPROVED BY

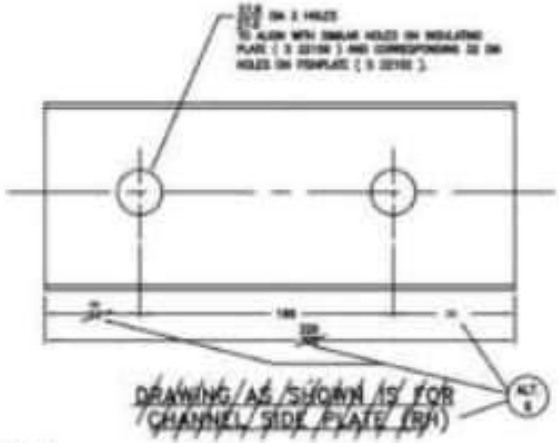

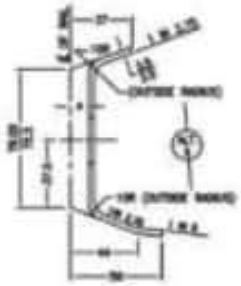

No.	DESCRIPTION	NO.
OFF	FOR ASSEMBLY	

R. D. S. O.

INSULATED RAIL JOINT – CHANNEL SIDE PLATE (LH) & (RH)

S 22103 – 04 (ADV.)

3. ALL DIMENSIONS SHALL BE WITHIN ± 1.0, UNLESS OTHERWISE SPECIFIED, DEPENDING UPON RELATED DIMENSIONS.
2. FINISHED FINE ALL OVER.
1. ALL DIMENSIONS IN MILLIMETRES.

NOTE. * ROUGHNESS NUMBER IN MICRONS.

MATL & SPEC: NYLON–TYPE 66 IRS : S40 IRS : S23

SCALE: MILLIMETRES — DO NOT SCALE

ALT.	DESCRIPTION	DATE
6	DIMENSION 20E ALTERED AS 20E, DIMENSION F1, DRILLED-STEEL TABLE DELETED, DIM (**) ADDED, HOUSING, TRC, NO. 3 AND NO. 4 OFF ADDED	26.11.01
5	OUTSIDE RADIUS ADDED	1-4-99
4	MODIFIED & REDRAWN	5.8.70

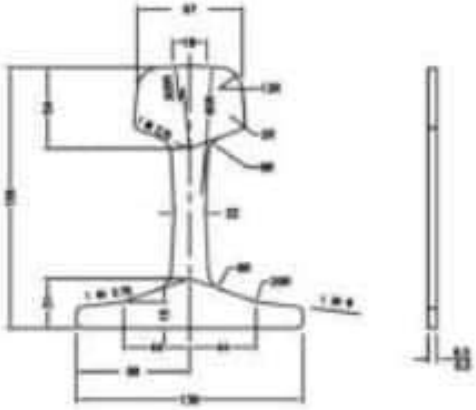

No.	DESCRIPTION	NO.
OFF	FOR ASSEMBLY	

R. D. S. O.

INSULATED RAIL JOINT– END POST

S 22105 (ADV.)

3. ALL DIMENSIONS SHALL BE WITHIN ± 1.0, UNLESS OTHERWISE SPECIFIED, DEPENDING UPON RELATED DIMENSIONS.
2. FINISHED FINE ALL OVER.
1. ALL DIMENSIONS IN MILLIMETRES.

NOTE. * ROUGHNESS NUMBER IN MICRONS.

MATL & SPEC: NYLON–TYPE 66 IRS : S40 IRS : S23

SCALE: MILLIMETRES — DO NOT SCALE

ALT.	DESCRIPTION	DATE
1	MODIFIED & REDRAWN	5.8.70

CALCULATION REGISTER No. ____ PAGES ____ ZONE BY ____ DRN. ____ CHD. ____ TRD. HERCHET SINGH ____ CHD. ____ CASE No. STS/3/2 ____ PASSED ____ NOTIFICATION No. ____ APPROVED ____

S 22105 • 3 •

SDO 593

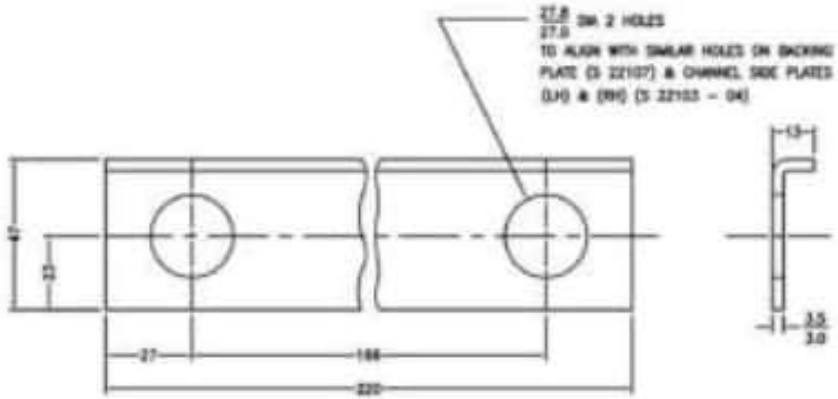

3. FINISHED FINE ALL OVER.
2. ALL DIMENSIONS SHALL BE WITHIN ± 1.0, UNLESS OTHERWISE SPECIFIED, DEPENDING UPON RELATED DIMENSIONS.
1. ALL DIMENSIONS IN MILLIMETRES.

NOTE

FILED OR ROUGH GROUND	MACHINE FINISH (ROUGH)	MACHINE FINISH (MEDIUM)	MACHINE FINISH (FINE)	GROUND	HARDENED GROUND	MATL. & SPEC.	NYLON–TYPE 66 IRS : 540 IRS : 523
	* ROUGHNESS NUMBER IN MICRONS.					SCALE	MILLIMETRES 10 5 10 20 DO NOT SCALE

ALT.	DESCRIPTION	DATE
3	MODIFIED & REPRINTED	6.6.70

4	INSULATED RAIL JOINT, 52 kg	SA22101
No. OFF	DESCRIPTION FOR ASSEMBLY	NO.

R. D. S. O.

INSULATED RAIL JOINT–INSULATING PLATE

7.5.66 (ADVANCE)

S 22106 (ADV.)

2. ALL DIMENSIONS SHALL BE WITHIN ± 1.0, UNLESS OTHERWISE SPECIFIED, DEPENDING UPON RELATED DIMENSIONS.
1. ALL DIMENSIONS IN MILLIMETRES.

NOTE

FILED OR ROUGH GROUND	MACHINE FINISH (ROUGH)	MACHINE FINISH (MEDIUM)	MACHINE FINISH (FINE)	GROUND	HARDENED GROUND	MATL. & SPEC.	STEEL SHEET IS : 226 IRS : 510
	* ROUGHNESS NUMBER IN MICRONS.					SCALE	MILLIMETRES 10 5 10 20 DO NOT SCALE

ALT.	DESCRIPTION	DATE
3	MODIFIED & REPRINTED	6.6.70

4	INSULATED RAIL JOINT, 52 kg	SA22101
No. OFF	DESCRIPTION FOR ASSEMBLY	NO.

R. D. S. O.

INSULATED RAIL JOINT–BACKING PLATE

7.5.66 (ADVANCE)

S 22107 (ADV.)

CALCULATION REGISTER No.	DRN.	TRD. HEROHET, SINGH	CASE No. STS/6/18	NOTIFICATION No.
PAGES DONE BY	CHD.	CHD.	PASSED	APPROVED

DRG. NO. S 22106 INCLUDES OPTD ALT NO. 4 OF THE ORIGINAL
" S 22107 " " 2 "

SDO 583

CANCELLED
VIDE NOTING AT PAGE 61/D
STS/IRJ/DESIGN DATED 6-3-87

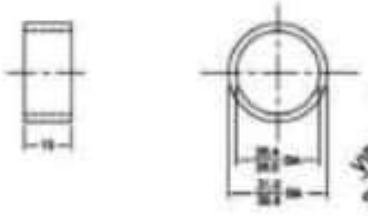

NO. OFF.	DESCRIPTION	NO.
4	INSULATED RAIL JOINT, B.S.NO. 75R	22121
4	INSULATED RAIL JOINT, B.S.NO. 90R	22111
4	INSULATED RAIL JOINT, 52 Kg.	22101

FOR ASSEMBLY.

R. D. S. O.

INSULATED RAIL JOINT
-FERRULE

2. ALL DIMENSIONS SHALL BE WITHIN ±1.0, UNLESS OTHERWISE SPECIFIED(DEPENDING UPON RELATED DIMENSIONS.
1. ALL DIMENSIONS IN MILLIMETRES.

NOTES

MATL & SPEC: STEEL IS : 226 IRS: 510

SCALE: MILLIMETRES 10 0 10 20 — DO NOT SCALE

ALT	DESCRIPTION	DATE
2	MODIFIED & RETRACED	8.8.72

7-5-66 (ADVANCE)

S 22108 (KIN.)

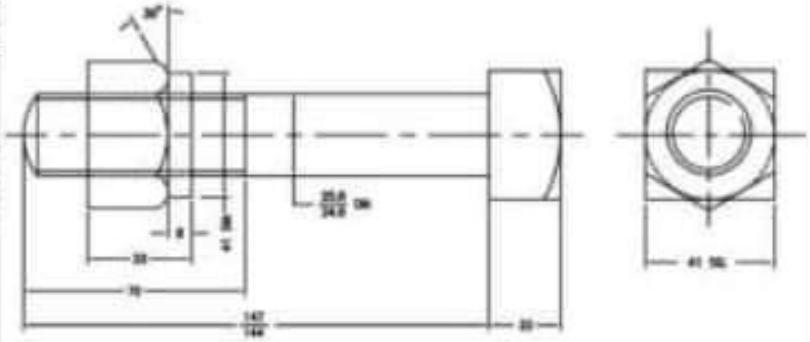

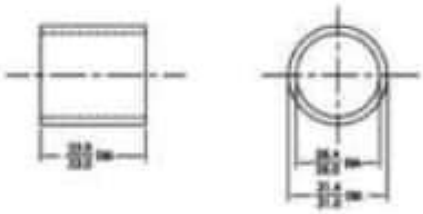

NO. OFF.	DESCRIPTION	NO.
8	INSULATED RAIL JOINT, B.S.NO. 75R	22121
8	INSULATED RAIL JOINT, B.S.NO. 90R	22111
8	INSULATED RAIL JOINT, 52Kg.	22101

FOR ASSEMBLY.

R. D. S. O.

INSULATED RAIL JOINT
- BUSH

2. FINISHED FINE ALL OVER.
1. ALL DIMENSIONS IN MILLIMETRES.

NOTE

MATL & SPEC: NYLON - TYPE 66 IRS : 540 IRS : 525

SCALE: MILLIMETRES 10 0 10 20 — DO NOT SCALE

ALT	DESCRIPTION	DATE
2	MODIFIED & RETRACED	8.8.72

7-5-66 (ADVANCE)

S 22109 (KIN.)

2. ALL DIMENSIONS SHALL BE WITHIN ±1.0, UNLESS OTHERWISE SPECIFIED(DEPENDING UPON RELATED DIMENSIONS.
1. ALL DIMENSIONS IN MILLIMETRES.

NOTE

MATL & SPEC: STEEL IRS : 723 IRS: 510

SCALE: MILLIMETRES 10 0 10 20 — DO NOT SCALE

ALT	DESCRIPTION	DATE
2	MODIFIED & RETRACED	8.8.72

7-5-66 (ADVANCE)

S 22110 (KIN.)

NO. OFF.	DESCRIPTION	NO.
4	INSULATED RAIL JOINT, B.S. NO. 75R	SA22121
4	INSULATED RAIL JOINT, B.S. NO. 90R	SA22111
4	INSULATED RAIL JOINT, 52 Kg.	SA22101

FOR ASSEMBLY.

R. D. S. O.

INSULATED RAIL JOINT
-FISHBOLT & NUT

SLAN. - 5/23N - MONO FIXED - - 12/87 - -

CALCULATION REGISTER No. | DRN. K.K. SETH | TRD. S.C. SHARMA | CASE No. STS/S/70 | NOTIFICATION NO. | DWG. No. 22108 INCLUDES UP TO ALT No. NIL OF THE ORIGINAL.
TRACED BY | CHD. | CHD. | PASSED | APPROVED | 22109 | 22110

CANCELLED
VIDE NOTING AT PAGE 61/D
STS/E/IRJ/DESIGN DATED 6-3-87

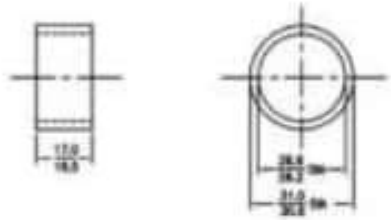

NO. OFF.	DESCRIPTION	NO.
4	INSULATED RAIL JOINT, 90 kg. UIC	SK 22181
4	INSULATED RAIL JOINT, 60 kg.	SK 22171
	FOR ASSEMBLY.	

R. D. S. O.

INSULATED RAIL JOINT-FERRULE

MATL & SPEC: STEEL IS : 226 (RS: 510)

SCALE: MILLIMETRES 10 0 10 20 DO NOT SCALE

10.8.74 (ADVANCED)

S 22178 (ADV.)

1. ALL DIMENSIONS IN MILLIMETRES.

NOTES

ALT. DESCRIPTION DATE

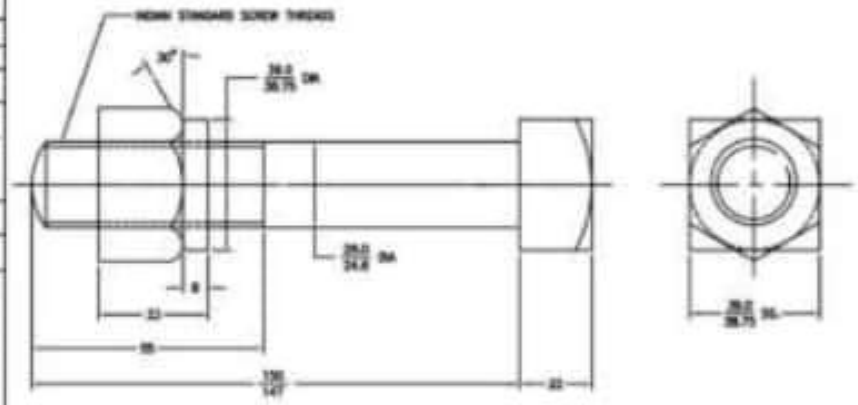

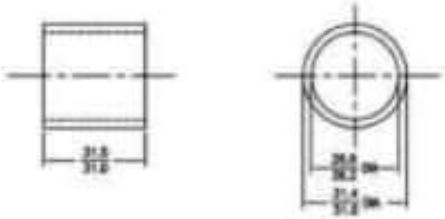

NO. OFF.	DESCRIPTION	NO.
4	INSULATED RAIL JOINT, 90 kg. UIC	SK 22181
4	INSULATED RAIL JOINT, 60 kg.	SK 22171
	FOR ASSEMBLY.	

R. D. S. O.

INSULATED RAIL JOINT-BUSH

MATL & SPEC: STEEL IRS : 540 (RS: 523)

SCALE: MILLIMETRES 10 0 10 20 DO NOT SCALE

10.8.74 (ADVANCED)

S 22179 (ADV.)

2. FINISHED FINE ALL OVER.
1. ALL DIMENSIONS IN MILLIMETRES.

NOTE

ALT. DESCRIPTION DATE

2. ALL DIMENSIONS SHALL BE WITHIN ±1.0, UNLESS OTHERWISE SPECIFIED.
1. ALL DIMENSIONS IN MILLIMETRES.

NOTE

MATL & SPEC: STEEL IRS : 723 (RS: 510)

SCALE: MILLIMETRES 10 0 10 20 DO NOT SCALE

ALT. DESCRIPTION DATE

NO. OFF.	DESCRIPTION	NO.
4	INSULATED RAIL JOINT, 90 kg. UIC	SK 22181
4	INSULATED RAIL JOINT, 60 kg.	SK 22171
	FOR ASSEMBLY.	

R. D. S. O.

INSULATED RAIL JOINT-FISHBOLT & NUT

10.8.74 (ADVANCED)

S 22180 (ADV.)

CALCULATION REGISTER No.	DRN.	TRD.	CASE No. STS/E/IRJ/DESIGN	NOTIFICATION NO.	DRG. No.	INCLUDES UP TO ALT No.	OF THE ORIGINAL
PAGES DONE BY	CHD.	CHD.	PASSED	APPROVED	"	"	"

SDO 629

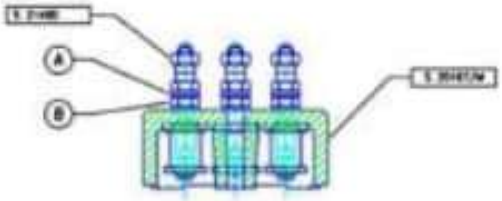

DRG. NO	DESCRIPTION	RESISTANCE
[illegible]	[illegible]	[illegible]
[illegible]	[illegible]	[illegible]
[illegible]	[illegible]	[illegible]

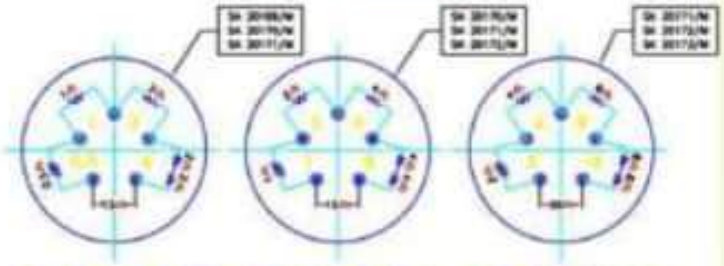

[illegible]	[illegible]	[illegible]	[illegible]
[illegible]	[illegible]	[illegible]	[illegible]
[illegible]	[illegible]	[illegible]	[illegible]

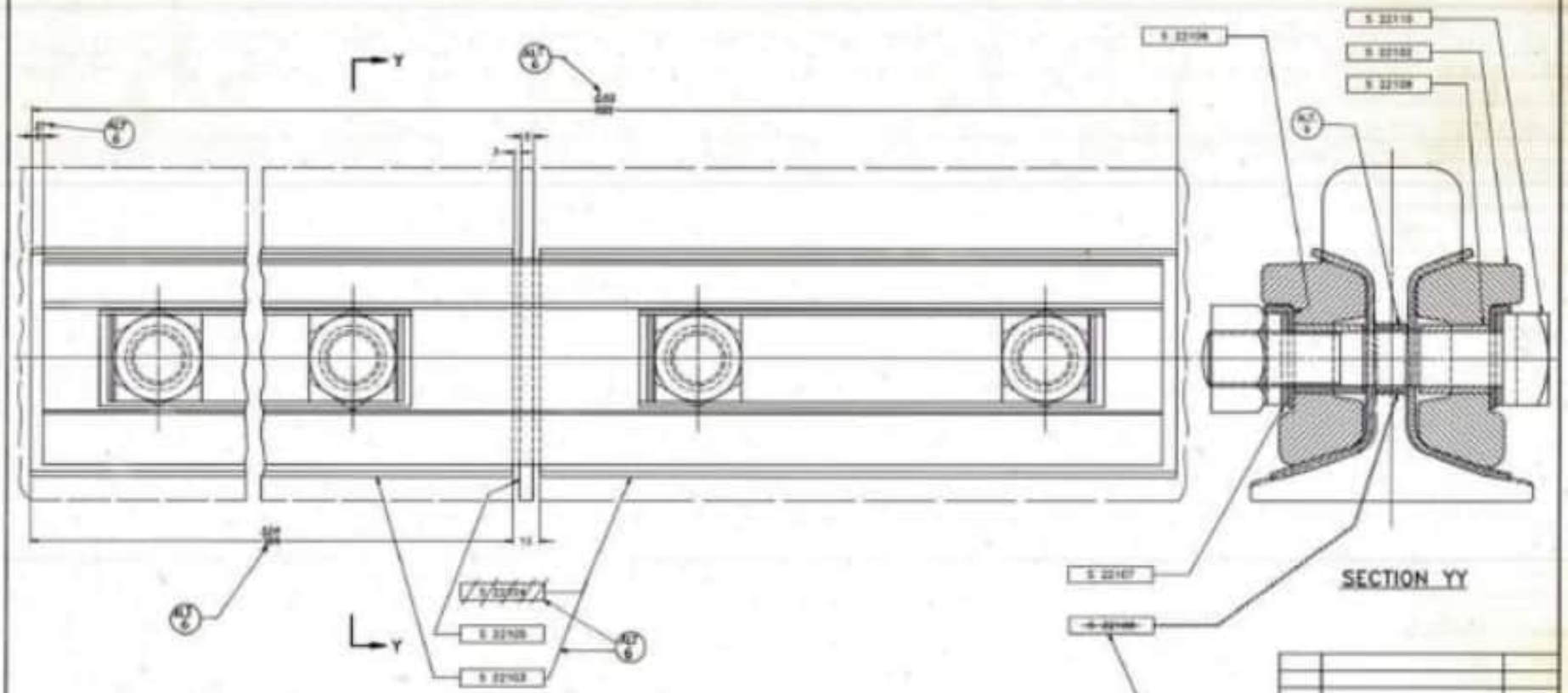

PART No.	DESCRIPTION	No. REQD.
S 22110	FISHBOLT & NUT	4
S 22106	BUSH	8
~~S 22108~~	~~FERRULE~~	~~4~~
S 22107	BACKING PLATE	4
S 22102	INSULATING PLATE	4
S 22109	END POST	1
~~S 22104~~	~~CHANNEL SIDE PLATE (RH)~~	~~2~~
S 22101	CHANNEL SIDE PLATE (LH)	~~2~~ 4
S 22103	FISHPLATE	2

R. D. S. O.

INSULATED RAIL JOINT
52 KG
(FOUR CHANNEL TYPE)

ALT	DESCRIPTION	DATE
6	DIMENSIONS G23, A40 & B ALTERED AS USE, AND A-21 RESPECTIVELY. DRAWING No. S 22104 DELETED AND PART LIST AMENDED.	[illegible]
5	DWG. No. S 22108 DELETED. PART LIST AND VIEW AMENDED.	5-3-61
4	MODIFIED & REDRAWN	5-6-70

SPEC. No. S 22 & S 40
SCALE MILLIMETRES 10 0 10 20 30 DO NOT SCALE

NOTE
2. ALL DIMENSIONS SHALL BE WITHIN ±1.0, UNLESS OTHERWISE SPECIFIED, DEPENDING UPON RELATED DIMENSIONS.
1. ALL DIMENSIONS IN MILLIMETRES.

DWG. [illegible] 7-5-58 (ADVANCE)
SA 22101 (ADV.)

SA ADD 2/235 MICRO FILMED 12/87

APPLICATION REGISTER No.
FINISH DONE BY CHK.
DRN. [illegible] CHK. [illegible]
TRC [illegible] CHK. [illegible]
CASE No. [illegible] PASSED [illegible]
NOTIFICATION No. APPROVED
DWG. No. SA 22101 INCLUDES SPEC ALT No. 3 OF THE ORIGINAL

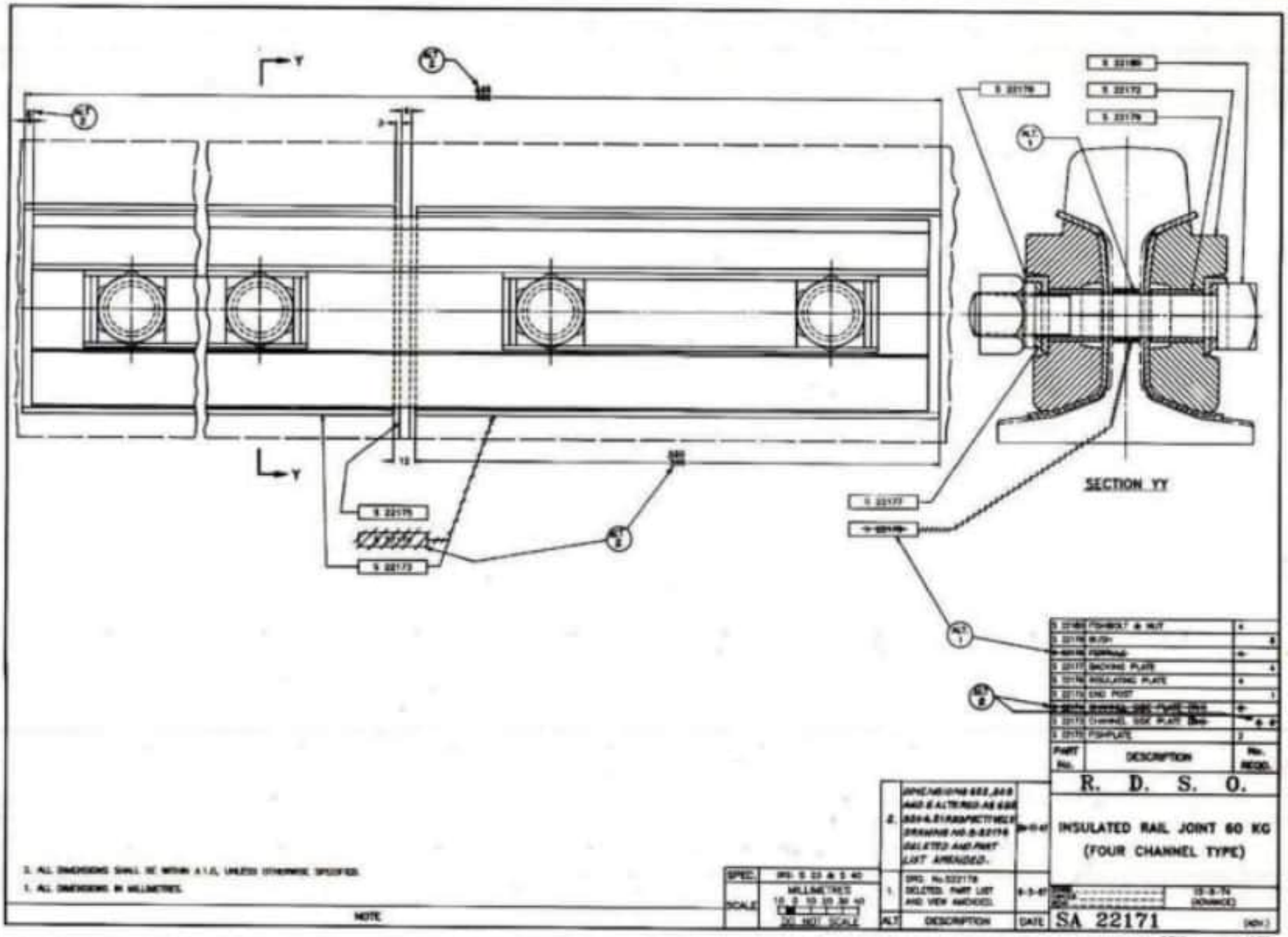

GARWARE

GARWARE

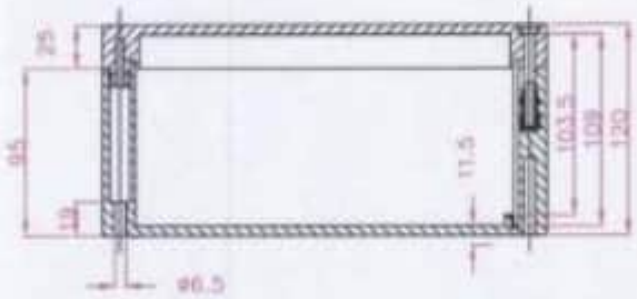

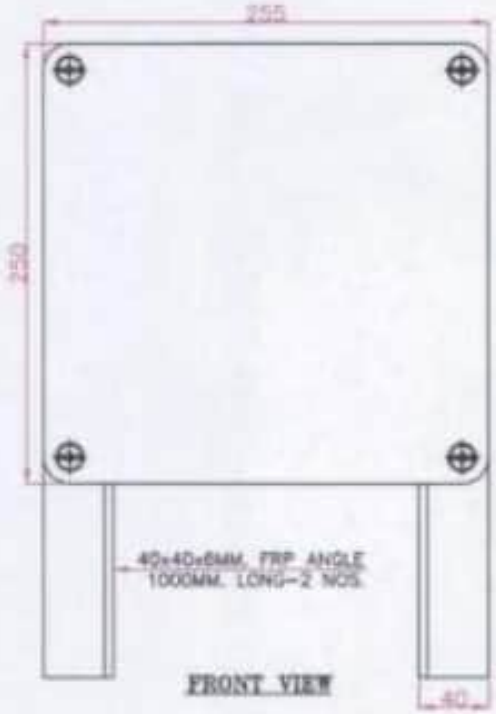

FRONT VIEW

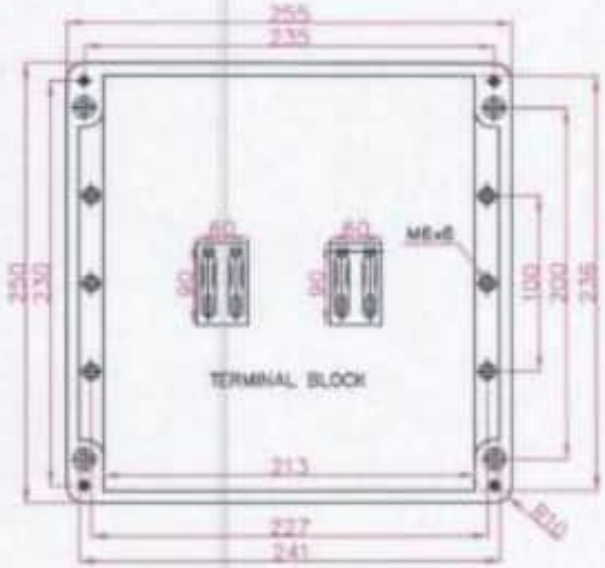

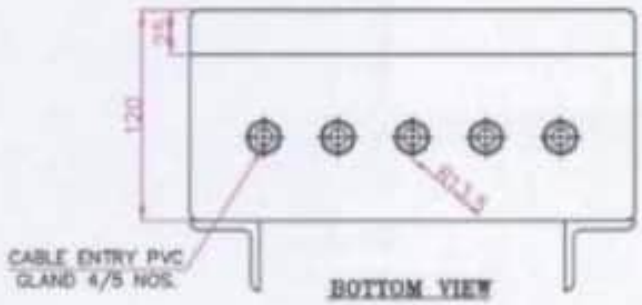

BOTTOM VIEW

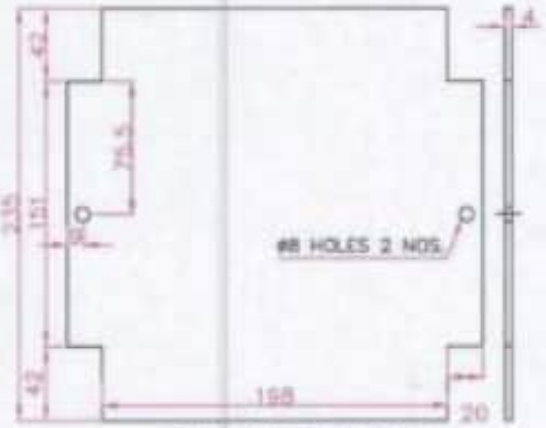

FRP MOUTING PLATE

NOTES

1. ALL DIMENSIONS ARE IN mm.
2. DIMENSIONS MAY DEVIATE BY + OR − 5mm.
3. SURFACE COLOUR IS SMOOTH GREY/BLACK.
4. BLOCK THICKNESS 5 mm.
5. AS PER RDSO SPEC. NO. − RDSO/SPN/151/97.
6. SMC MAKE 35% GLASS + OR − 5%
7. HOT COMPRESSION MOULDED.

SL. No.	DESCRIPTION	QTY
1	FRP JB 250X255X120mm.	1 No.
2	FRP ANGLE 40X40X6X1000mm.	2 Nos.
3	PVC CABLE ENTRY GLAND	4/5 Nos.
4	2 WAY PBT TERMINAL	2 Nos.
5	MOUNTING PLATE	1 No.
6	PVC PIPE WITH JAMNUT	1 No.

		APPROVED		CHECKED				DRAWN		DRG. NO.
MP-82 OF FILE NO.93.42/2/Pt -II	E.R.	(B.K.AGRAWAL)	(U.P.SINGH)	(R.SINGH)	(N.K.UPPADHAY)	(S.KUMAR)	(A.PALIT)	(S.BISWAS)	250X255X120 FRP BASED TLJB ARA TYPE	S/TYP/0096
		PCSTE	CSE	DY.CSTE/W/D&D/HQ	ASTE/HWM/RT HQ	ASTE/D&D/T/HQ	SSE/SIG/HQ	JE/D&D/W/HQ		

S&T Drawing

Chapter -8

LED Main & Subsidiary signals, CLS units, Route Indicators & foundation etc.

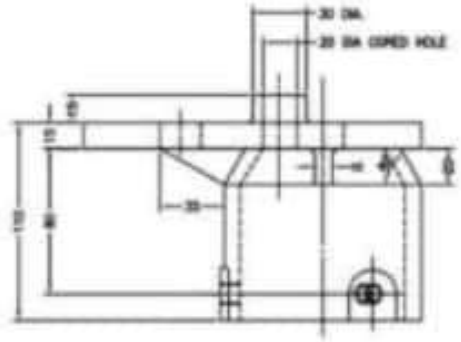

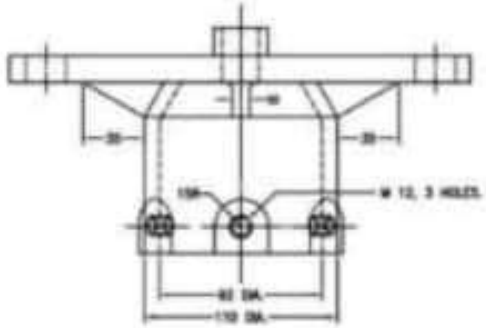

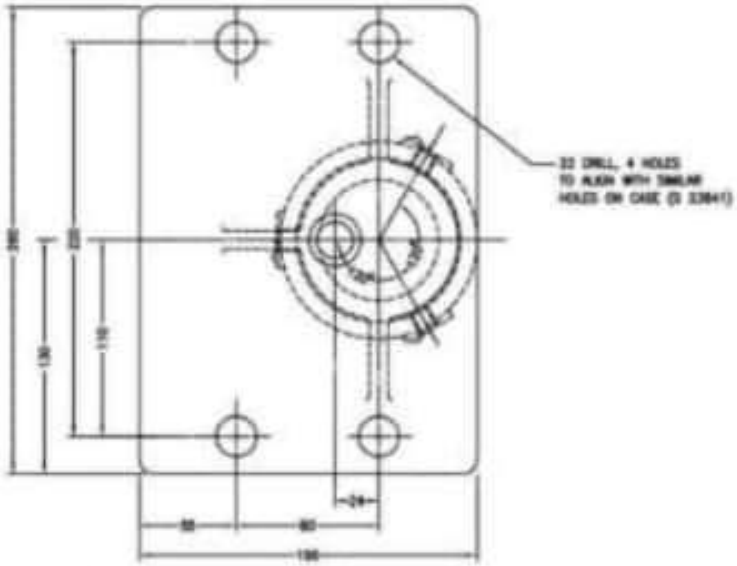

7. EXCEPT ON THE WORKING SURFACES, PAINTED ALL OVER WITH TWO PRIMING COATS, ONE COAT OF ZINC CHROME TO IS : 104, FOLLOWED BY ONE COAT OF RED OXIDE – ZINC CHROME TO IS : 2074, AND A FINISHING COAT WITH DEAD BLACK PAINT TO IS : 154.
6. EDGES AND CORNERS ROUNDED OFF UNLESS OTHERWISE REQUIRED.
5. DRESSED SMOOTH ALL OVER.
4. HOLE CENTRES SHALL NOT DEVIATE BY MORE THAN 0.5.
3. ANGULAR DIMENSIONS SHALL BE WITHIN $\pm \frac{1}{2}^{\circ}$
2. ALL DIMENSIONS SHALL BE WITHIN ±1.0, UNLESS OTHERWISE SPECIFIED, DEPENDING UPON RELATED DIMENSIONS.
1. ALL DIMENSIONS IN MILLIMETRES.

NOTE

FILED OR ROUGH GROUND ▽ 3 80

MATL & SPEC.	CAST IRON, GRADE 20 IS : 210 IRS : S 10
SCALE	MILLIMETRES 10 0 20 40 60 DO NOT SCALE

ALT.	DESCRIPTION	DATE

1	SHUNT SIGNAL POSITION LIGHT TYPE	SA 23840
NO. OFF	DESCRIPTION FOR ASSEMBLY	NO.

R. D. S. O.

SHUNT SIGNAL – MOUNTING SOCKET (90.0. DIA)

DRAWN
CHECKED
REVD. 25-3-69 (ADVANCED)

S 23845 (NEW)

SI ADD 4/299 MICRO FILMED 4/88

CALCULATION REGISTER No.	DRN RAM KRISHAN	TRD.	CASE No. ST/SM/PLJS	NOTIFICATION NO.
PAGES DONE BY	CHD	CHD.	PASSED	APPROVED

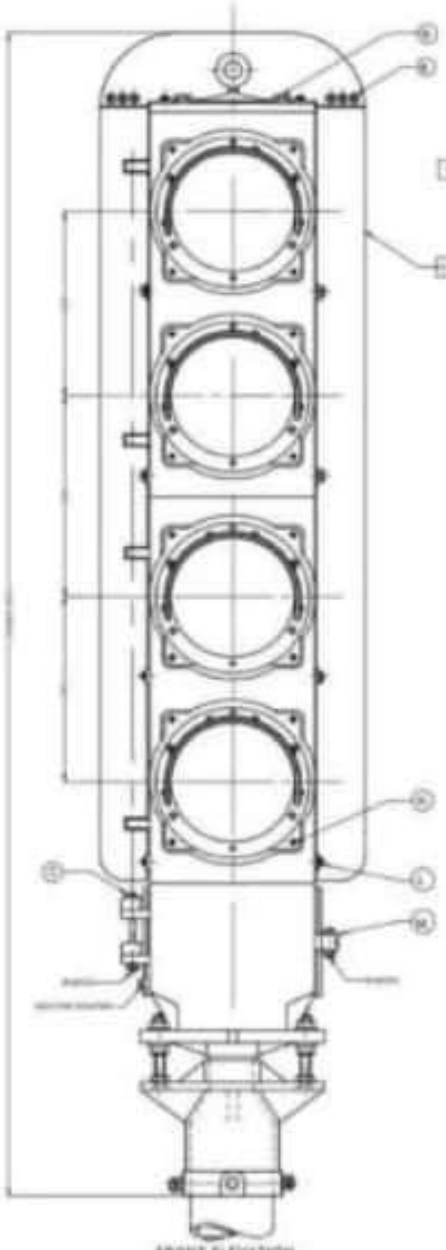

FRONT ELEVATION

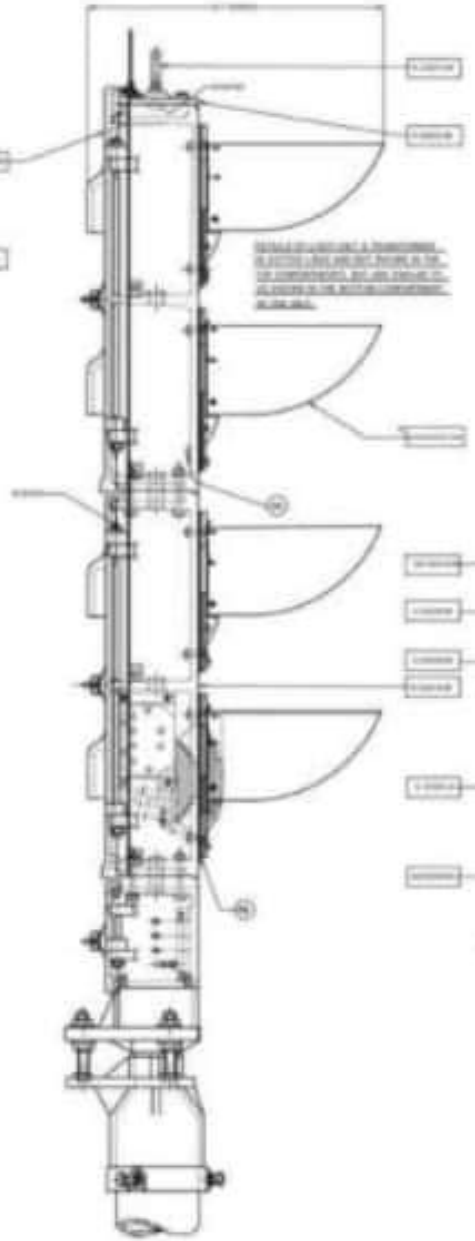

SIDE VIEW

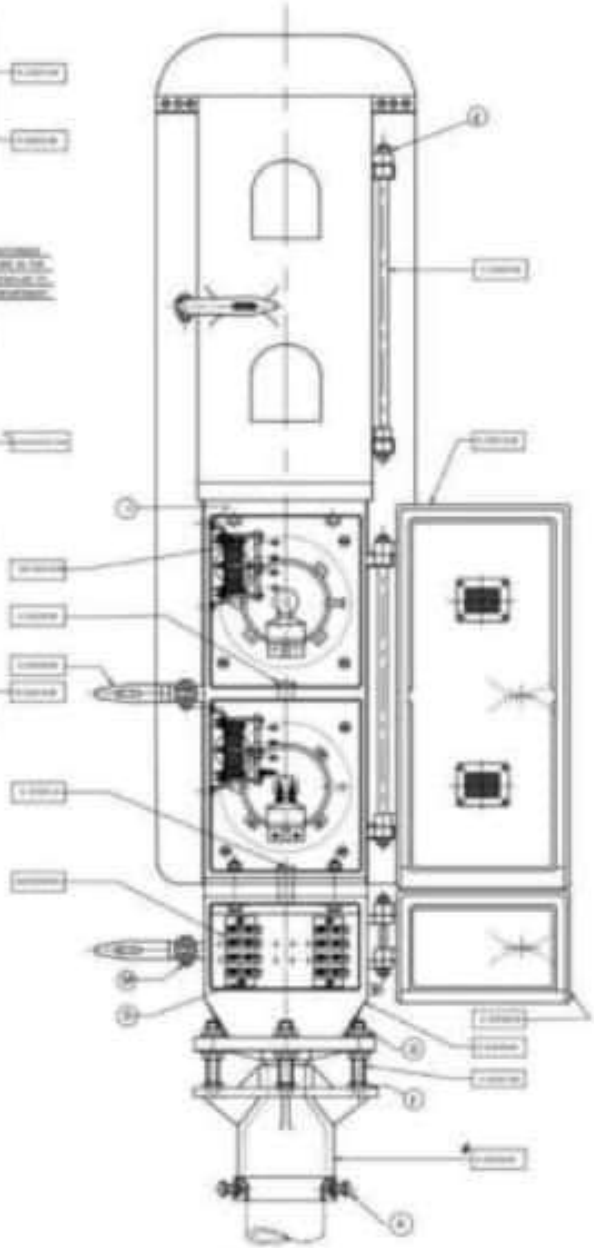

BACK ELEVATION

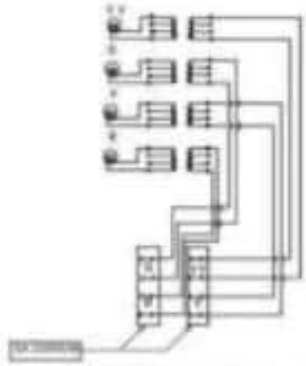

INSIDE WIRING DIAGRAM

PART No.	DESCRIPTION	No. REQD

R. D. S. O.

SIGNAL,COLOUR LIGHT,
MULTI- UNIT TYPE
(4 ASPECTS)

SA 23001A/M

NOTE

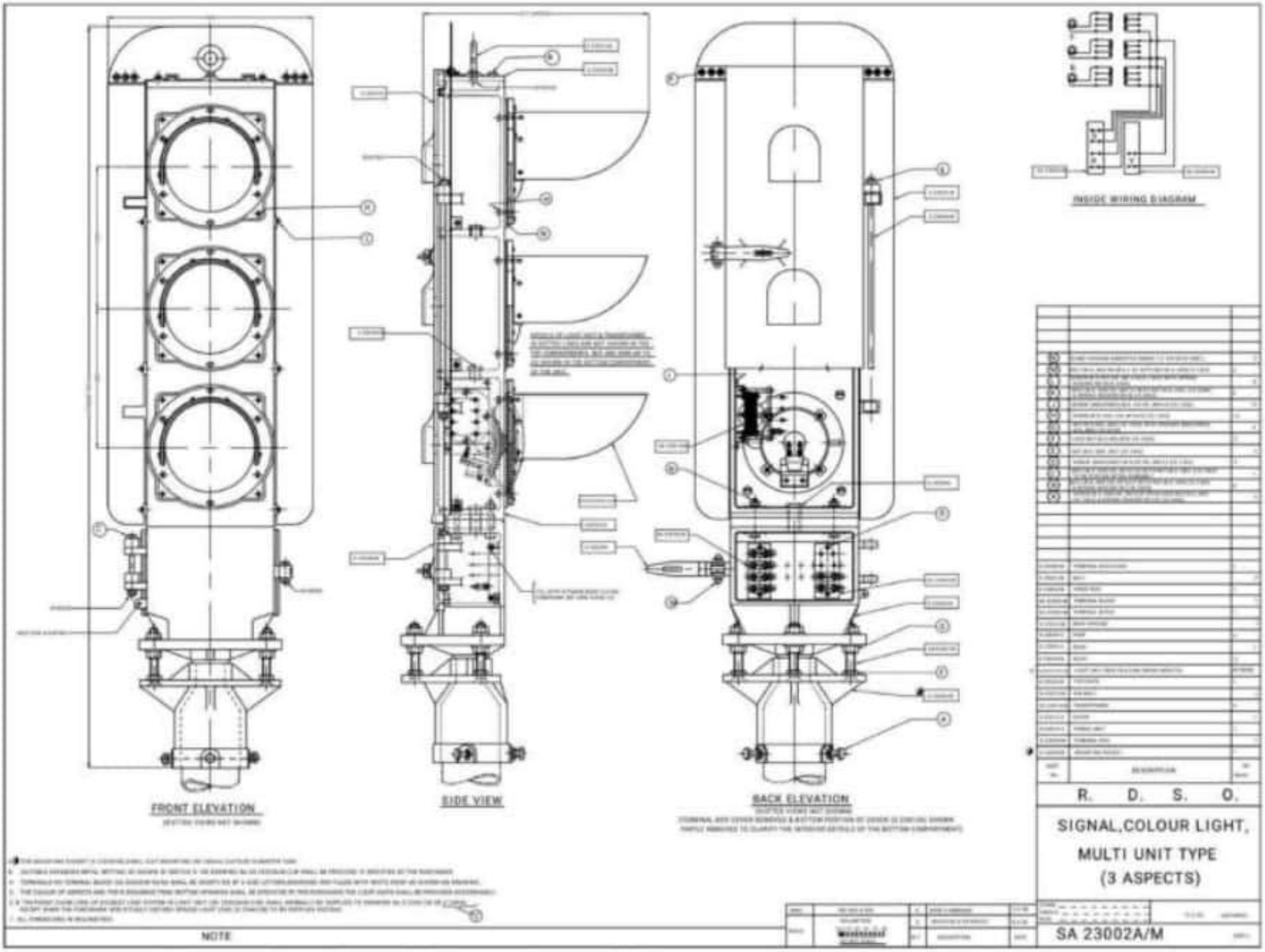
FRONT ELEVATION
SIDE VIEW
BACK ELEVATION
INSIDE WIRING DIAGRAM
R. D. S. O.
SIGNAL,COLOUR LIGHT,
MULTI UNIT TYPE
(3 ASPECTS)
SA 23002A/M
NOTE

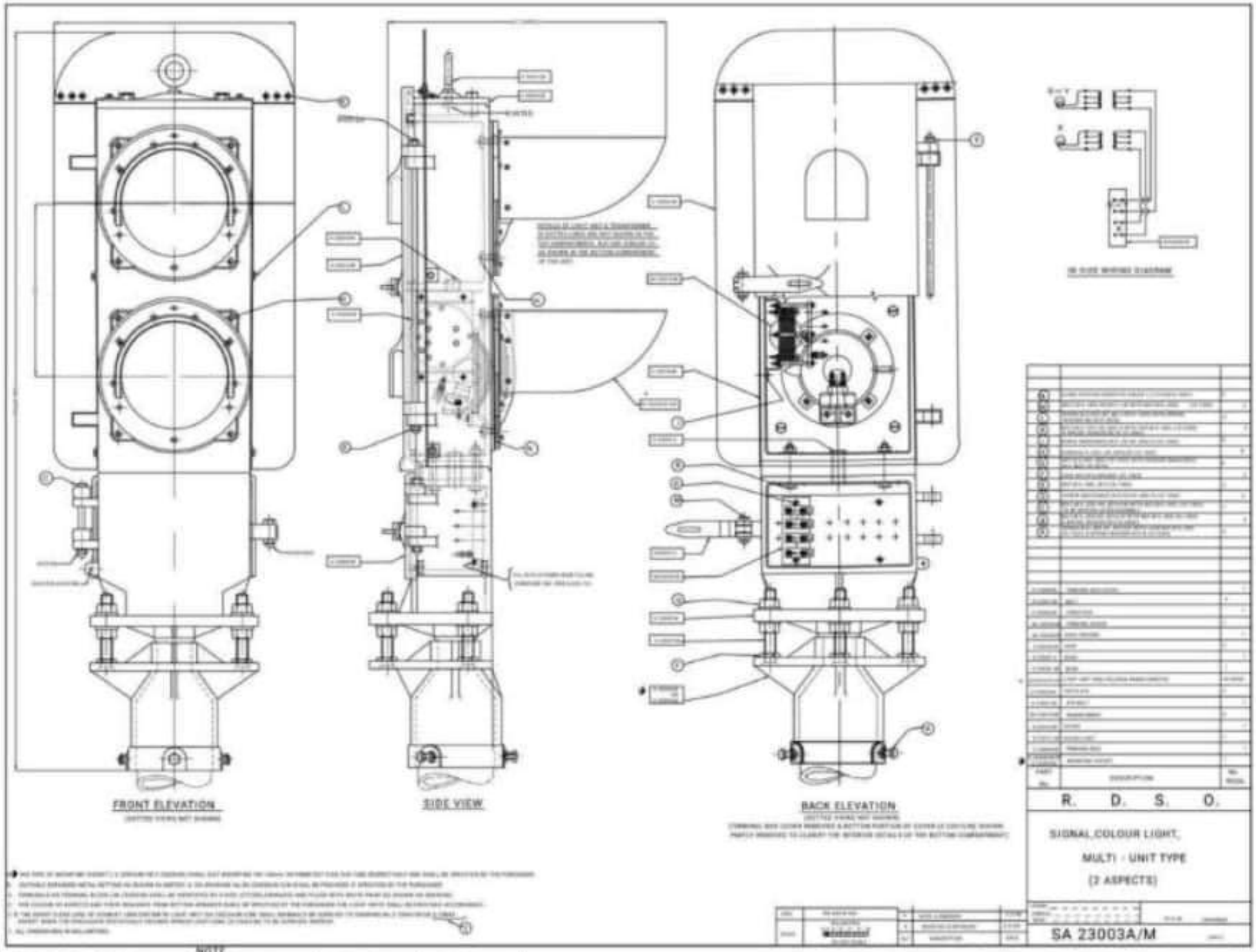
FRONT ELEVATION
SIDE VIEW
BACK ELEVATION
R. D. S. O.
SIGNAL COLOUR LIGHT,
MULTI - UNIT TYPE
(2 ASPECTS)
SA 23003A/M

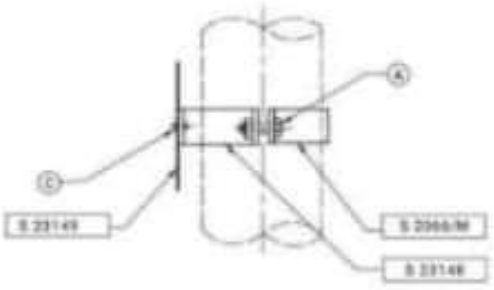

ENLARGED VIEW AT Y

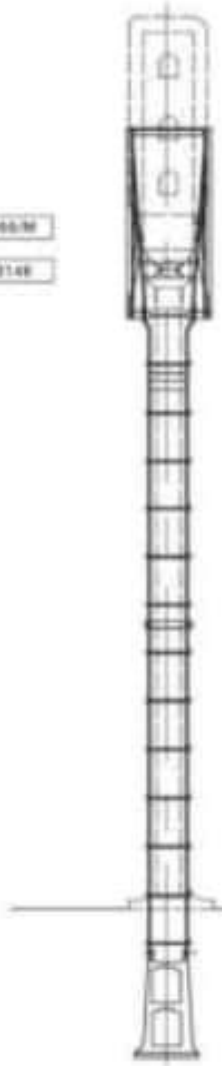

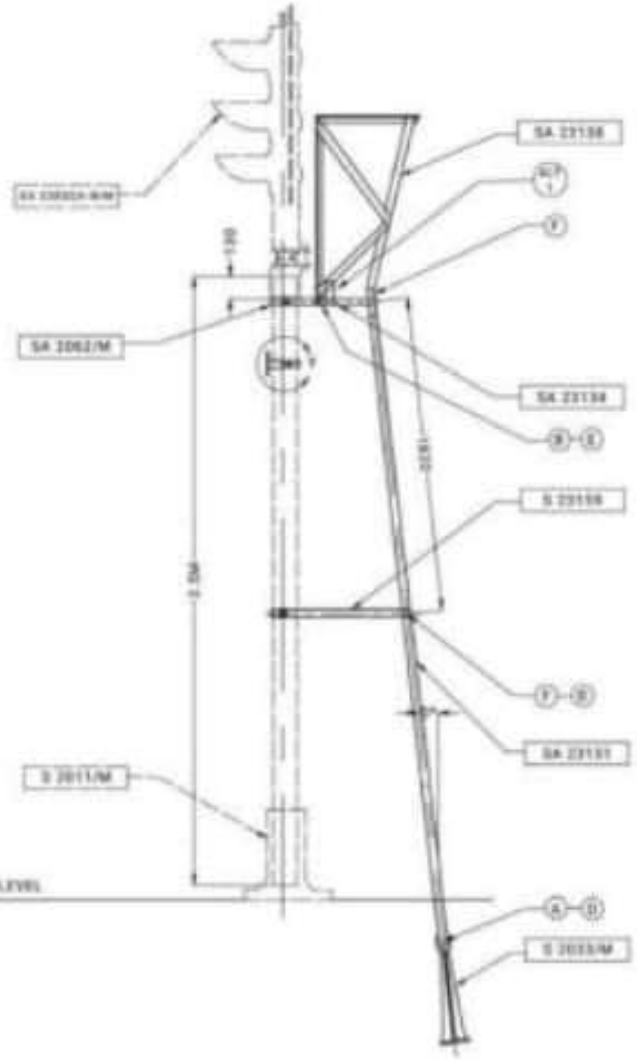

Y	BOLT M6 HEX HD M12x25 WITH HEX NUT(IS:1363)	4
T	SPRING WASHER(IS:3063)	4
D	SPRING WASHER(IS:3063)	
C	RIVET M6 FLAT HD 20dia(IS:2189)	2
B	BOLT M6 HEX HD M8x20 WITH HEX NUT(IS:1363)	4
A	BOLT M 5 HEX HD M12x 30 WITH HEX NUT(IS:1363)	4
S 2066/M	HALF CLAMP	1
SA2062/M	STAY CLAMP	2
S 2033/M	LADDER FOUNDATION	1
S23159	LADDER STAY (SMALL)	2
SA23151	LADDER SECTION	1
S 23149	NUMBER PLATE	1
S 23148	NUMBER PLATE CLAMP	2
SA23158	GUARD RAIL(COMPLETE)	1
SA23154	PLATFORM	1
PART No	DESCRIPTION	No. REQD

ALT 1

2. PAINTED ALL OVER EXCEPT ON THE NUMBER PLATE TWO PRIMING COATS, ONE OF ZINC CHROME TO IS:104,FOLLOWED BY ANOTHER OF RED OXIDE CHROME TO IS:2074 AND A FINISHING COAT OF DEAD BLACK PAINT TO IS:154.
3. ~~# THIS SPECIFICATION IS IN FPS UNITS. EQUIVALENT METRIC SIZE AND SPECIFICATION SHALL BE USED WHEN AVAILABLE.~~
4. ~~PAINTED WITH DEAD BLACK TO IS:154,WITH A PRIMING COAT OF RED LEAD TO IS:102 ALL OVER EXCEPT ON THE NUMBER PLATE.~~
1. ALL DIMENSIONS IN MILLIMETRES.

NOTE

SPEC	IRS:S19			
SCALE	MILLIMETRES 100 0 200 400 DO NOT SCALE	1	PART LIST VIEW & NOTE 2 AMENDED AND NOTE 3 DELETED.	25.4.79
		ALT	DESCRIPTION	DATE

R. D. S. O.

LADDER 3.5 M

(FOR COLOUR LIGHT SIGNAL

- MULTI UNIT TYPE)

STAGE 1 / STAGE 2 / SEALE — — — — — — — — 8.2.65 ADVANCE

SA 23150 (ADVANCE)

CIRCULATION REGISTER No. — — —	DRAWN BY — — — — — —	TRACED BY — — — — — —	CASE No. — — —		
PAGES DONE BY — — — — — —	CHECKED BY — — — — — —	CHECKED BY — — — — — —	PASSED BY — — — — — —	APPROVED BY — — — — — —	TRACES FROM RDSO/S 21/1(JPT)(JM)(JP1)(JP1)(RB)

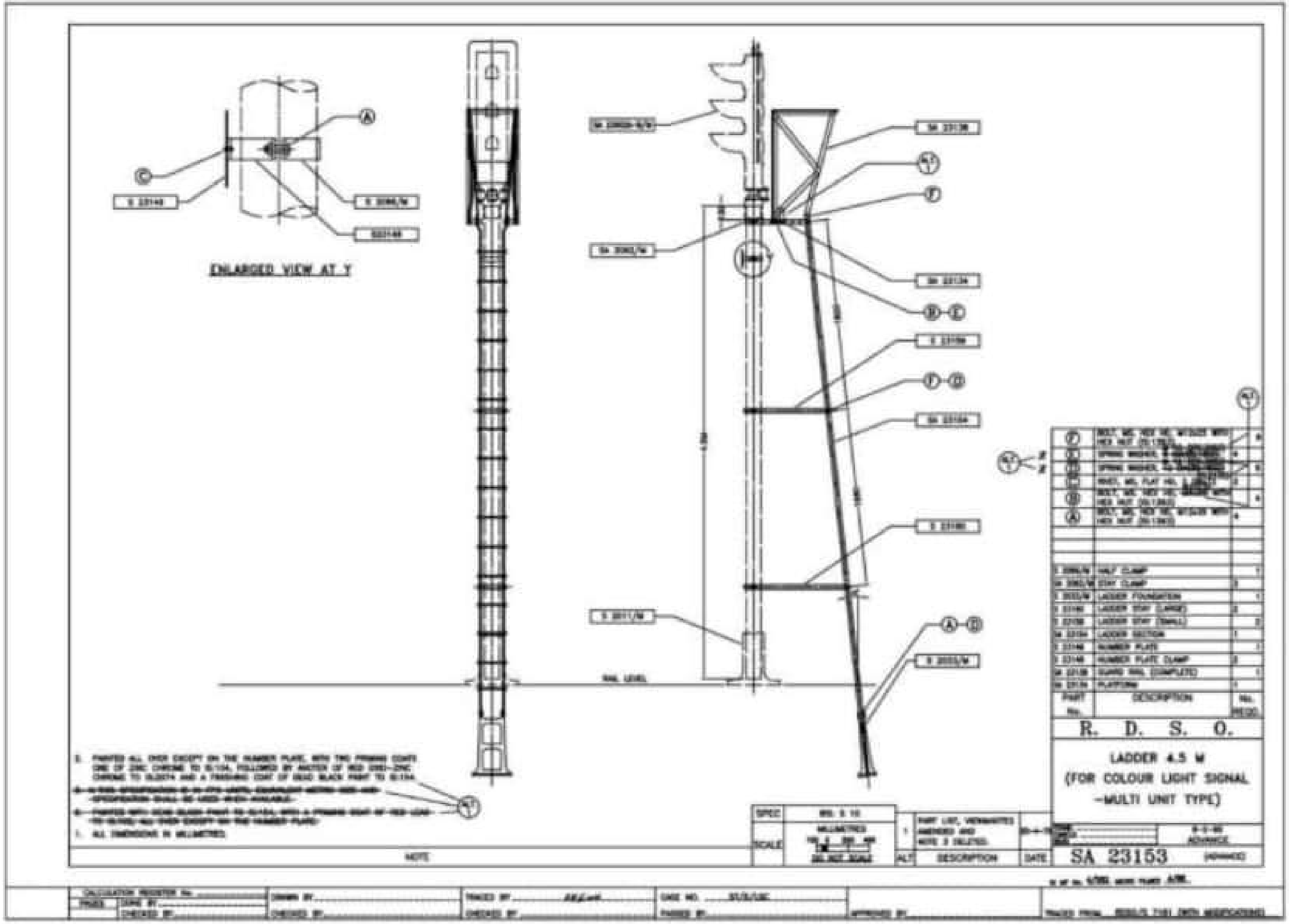

ENLARGED VIEW AT Y
RAIL LEVEL
R. D. S. O.
LADDER 4.5 M
(FOR COLOUR LIGHT SIGNAL
-MULTI UNIT TYPE)
SA 23153
NOTE
DESCRIPTION

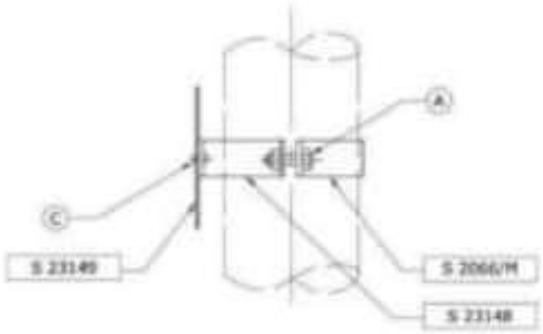

ENLARGED VIEW AT Y

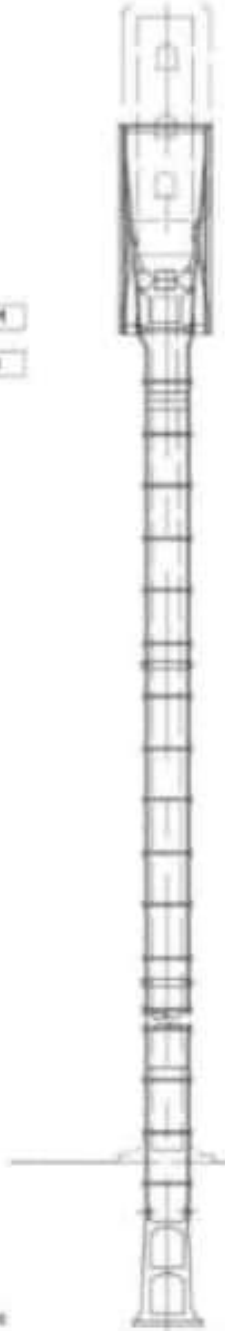

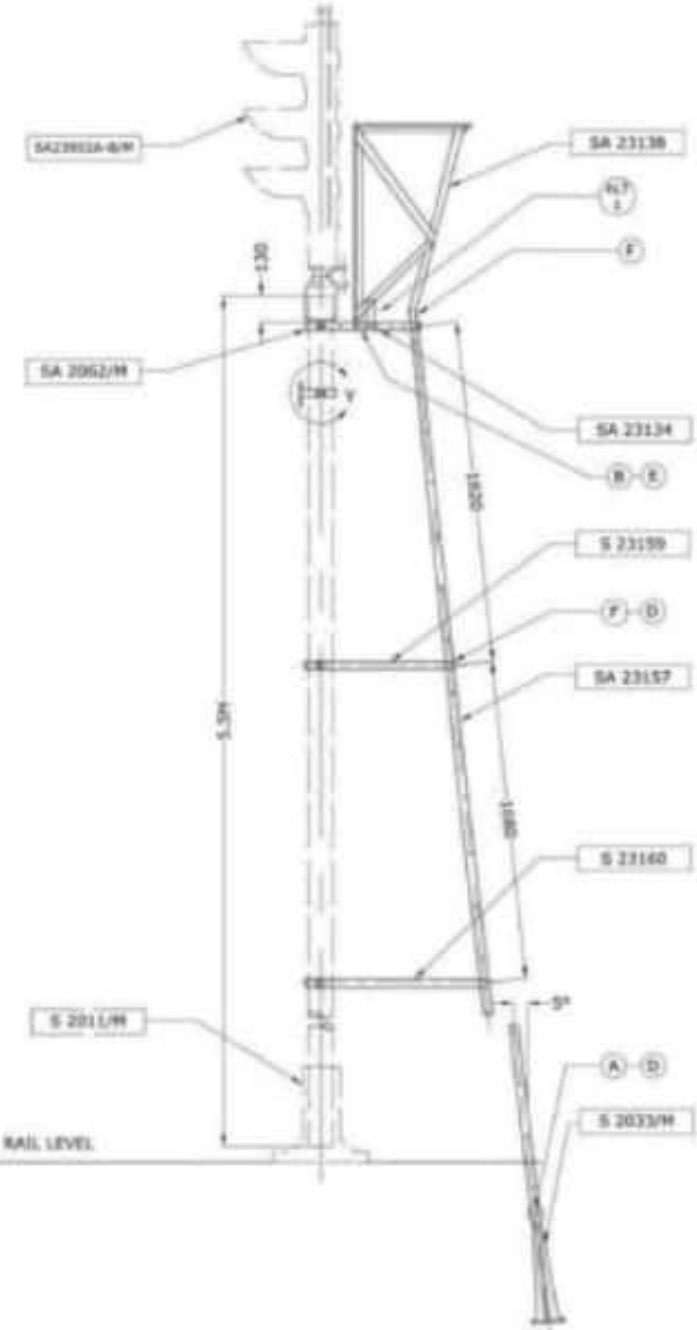

PART No.	DESCRIPTION	No. REQD
F	BOLT,MS,HEX HD,M12x25 WITH HEX NUT(IS:1363)	6
E	SPRING WASHER	4
D	SPRING WASHER	6
C	RIVET,MS,FLAT HD	2
B	BOLT,MS,HEX HD	4
A	BOLT,M.S.HEX HD,M12x 35 WITH HEX NUT(IS:1363)	4
S 2066/M	HALF CLAMP	1
SA2062/M	STAY CLAMP	3
S 2033/M	LADDER FOUNDATION	1
S23150	LADDER STAY(LARGE)	2
S23159	LADDER STAY (SMALL)	2
SA23157	LADDER SECTION	1
S 23149	NUMBER PLATE	1
S 23148	NUMBER PLATE CLAMP	2
SA23138	GUARD RAIL(COMPLETE)	1
SA23134	PLATFORM	1

R. D. S. O.

LADDER 5.5 M

(FOR COLOUR LIGHT SIGNAL

- MULTI UNIT TYPE)

2. PAINTED ALL OVER EXCEPT ON THE NUMBER PLATE TWO PRIMING COATS, ONE OF ZINC CHROME TO IS:104,FOLLOWED BY ANOTHER OF RED OXIDE CHROME TO IS:2074 AND A FINISHING COAT OF DEAD BLACK PAINT TO IS:15A.
3. ● THIS SPECIFICATION IS IN FPS UNITS. EQUIVALENT METRIC SIZE AND SPECIFICATION SHALL BE USED WHEN AVAILABLE.
4. PAINTED WITH DEAD BLACK TO IS:15A,WITH A PRIMING COAT OF RED LEAD TO IS:102,ALL OVER EXCEPT ON THE NUMBER PLATE.
1. ALL DIMENSIONS IN MILLIMETRES.

NOTE

SPEC	IRS:S10			
SCALE	MILLIMETRES 100 0 200 400 DO NOT SCALE	1	PART LIST:ITEM 8 NOTE 2 AMENDED AND NOTE 3 DELETED.	25.4.79
		ALT	DESCRIPTION	DATE

STAN: 8.2.65
CANC: — — — —
SDCI: — — — —
ADVANCE

SA 23156 (ADVANCE)

CALCULATION REGISTER No. — — — DRAWN BY — — — — — — — TRACED BY — — — — — — — CASE No. — STZR/LSC — — —

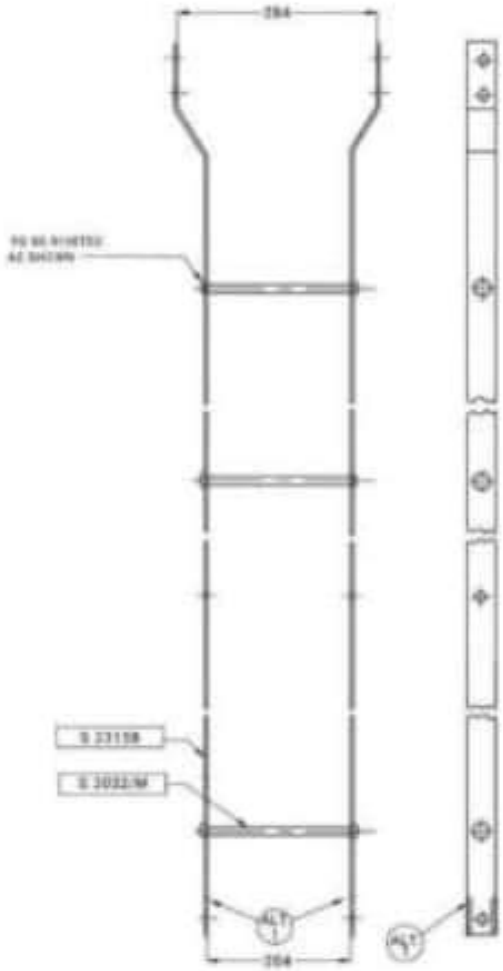

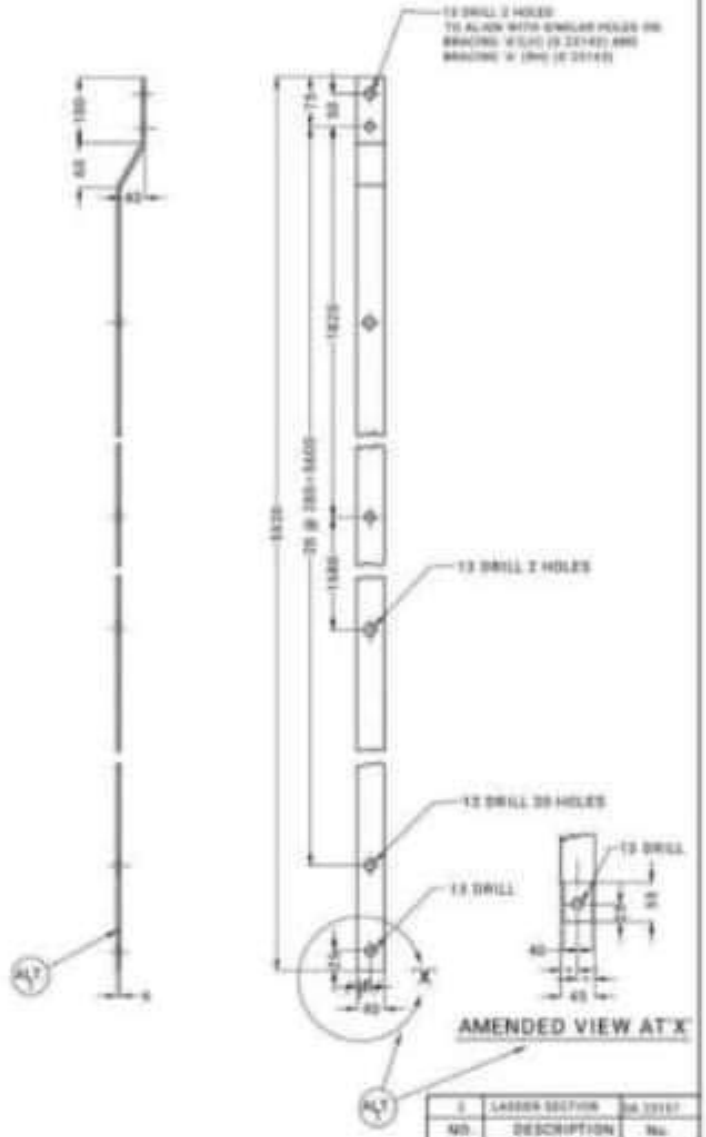

PART No.	DESCRIPTION	No. REQD
S 3032/M	[illegible]	[illegible]
S 23158	SIDE 'D'	2

R D S O

LADDER 5.5 M-
LADDER SECTION

9-2-45
ADVANCE

SA 23157 (ADV)

NOTE & SPECIFICATION

ALT	DESCRIPTION	DATE	[illegible]	FOR ASSEMBLY	[illegible]
1	[illegible]	[illegible]	[illegible]	LADDER S 5M	[illegible]

2. ALL DIMENSIONS SHALL BE WITHIN ± 1.5 UNLESS OTHERWISE SPECIFIED, DEPENDING UPON RELATED SPECIFIED
1. ALL DIMENSIONS IN MILLIMETRES.

NOTE

MATL & SPEC

SCALE

MILLIMETRES

ALT	DESCRIPTION	DATE
1	[illegible]	[illegible]

NO. OFF	DESCRIPTION	No.
2	LADDER SECTION FOR ASSEMBLY	SA 23157

R D S O

LADDER SECTION-
SIDE 'D'

9-2-45
ADVANCE

S 23158 (ADV)

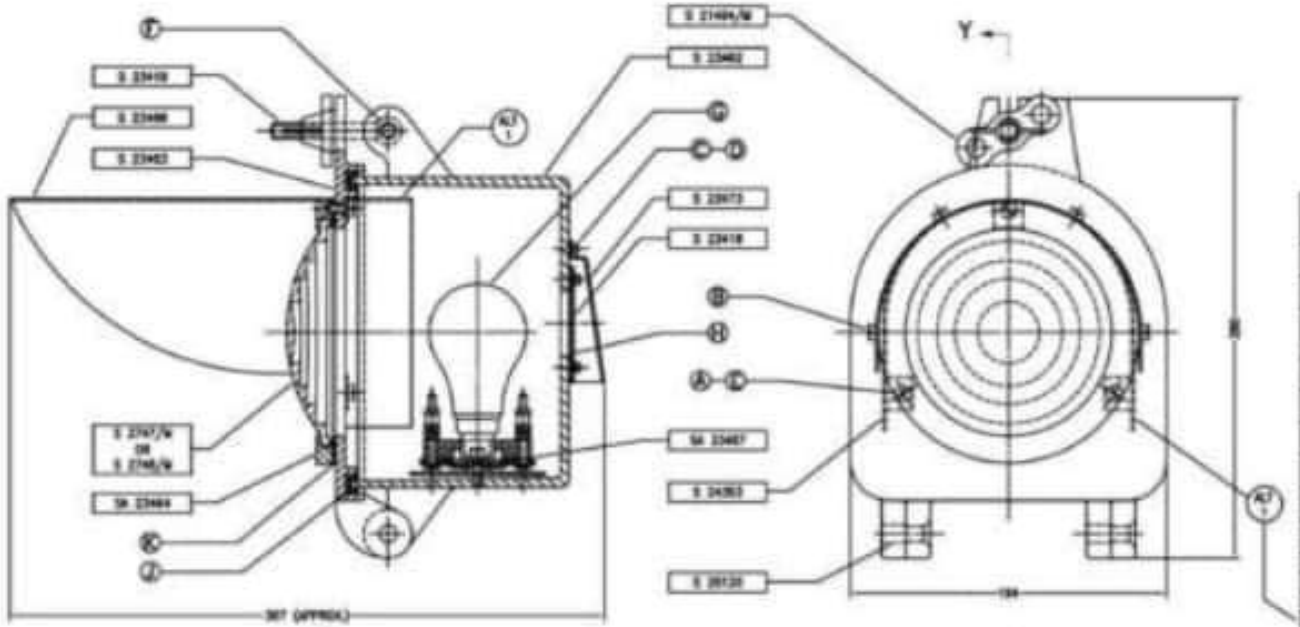

SECTION YY

PART No.	DESCRIPTION	No. REQD.
Ⓚ	GLAND PACKING ASBESTOS RING, GRADE 1,180 OUTER DIA x 128 INNER DIAM2 THICK(S-4487)	1
Ⓙ	ASBESTOS JUTE PACKING (IMPREGNATED) 10 DIA	AS REQD.
Ⓗ	WIRE GAUZE STEEL MS x 70, 140 S [IS:1566]	1
Ⓖ	ELECTRIC LAMP BAYONET CAP,110 VOLT, 25 WATTS [IS-418]	1
Ⓕ	RIVET, WELSNAP HD, S DIA x 32 [IS:2155]	1
Ⓔ	SPRING WASHER M5-S [IS:3063]	3
Ⓓ	WASHER (PUNCHED) M.S. M3 [IS:2016]	8
Ⓒ	SCREW MS, CH. HD, M3 x 8 [IS:1366]	8
Ⓑ	SCREW MS, CH. HD, M4 x 10 [IS:1366]	4
Ⓐ	SCREW MS, CH. HD, M5 x 12 [IS:1366]	2
S 24353	INNER HOOD	1
S 2747/M OR S 2748/M	OPTICAL STEPPED LENS (13N DAGERR FOCAL LENGTH)	1
S 23473	VENTILATOR COVER	1
SA 23487	LAMP HOLDER	1
S 23488	HOOD	1
S 23484	RING	1
S 23483	COVER	1
S 23483	CASE	1
S 23419	EYE BOLT	1
S 23418	WIRE GAUZE FRAME	1
S 2484/M	RING NUT	1
S 20120	PIN	2

R. D. S. O.

CALLING ON SIGNAL

(COLOUR LIGHT TYPE)

4. LENS SHALL BE SECURED IN POSITION BY MEANS OF SUITABLE JOINTING COMPOUND.
3. FIXING ARRANGEMENT SHALL BE AS PER DRAWING No. SA 24352.
2. ⊕ LENS (GREEN OR YELLOW) SHALL BE SPECIFIED BY THE PURCHASER.
1. ALL DIMENSIONS IN MILLIMETRES.

NOTE

SPEC	IRS : 523
SCALE	MILLIMETRES 10 0 20 40 60 — DO NOT SCALE

ALT	DESCRIPTION	DATE
1	S 24353 ADDED AND VIEWS AMENDED	23-7-86

SA 24351 (ADV.)

CIRCULATION REGISTER No.	DRN.	TRD.	CASE No.	NOTIFICATION No.
PAGES / DONE BY	CHD.	CHD.	PASSED	APPROVED

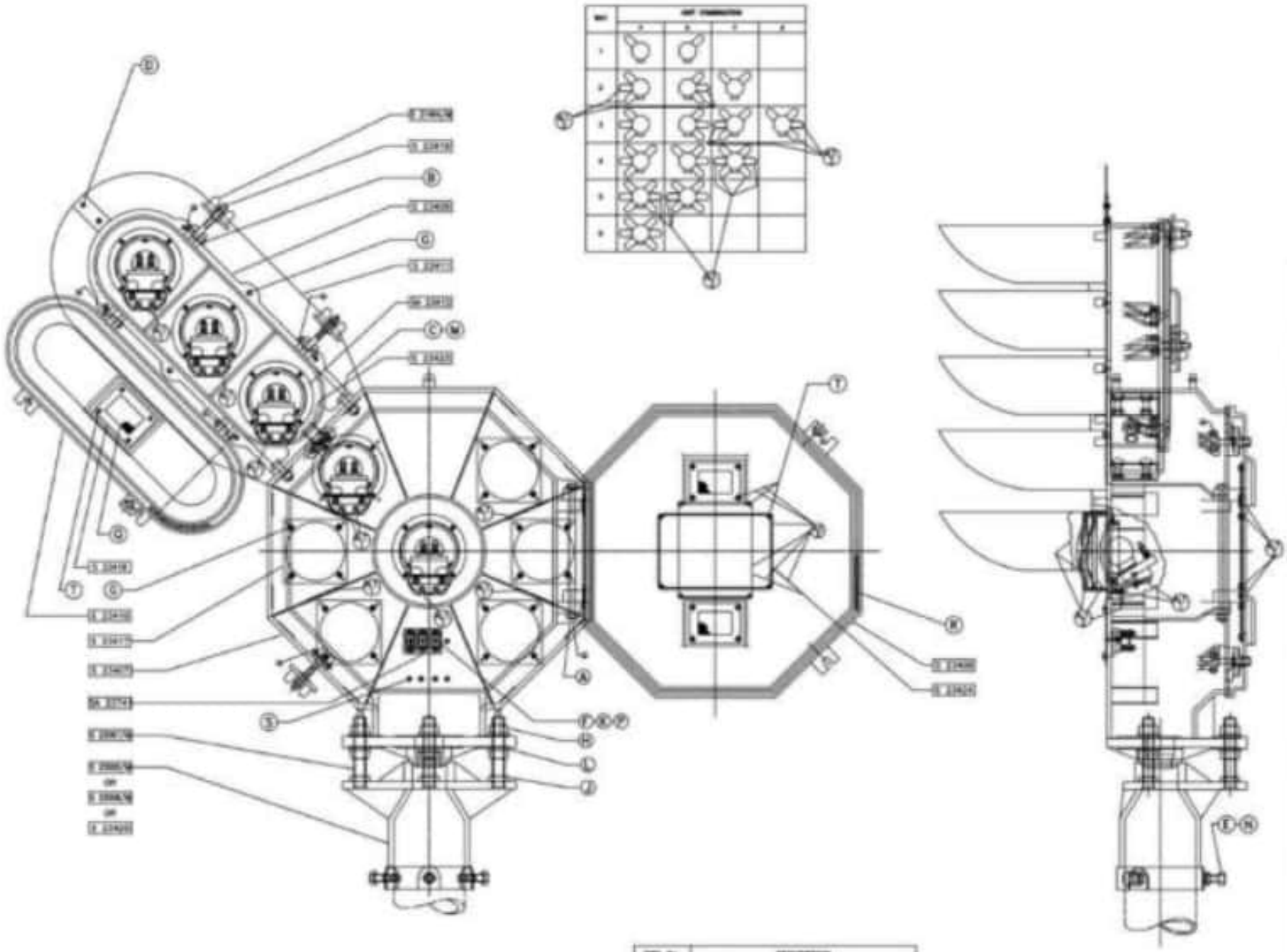

DRG. No.	DESCRIPTION
SA 23401	ROUTE INDICATOR, DIRECTION TYPE, 1 UNIT ARM, 1 WAY
SA 23402	ROUTE INDICATOR, DIRECTION TYPE, 2 UNIT ARM, 2 WAY
SA 23403	ROUTE INDICATOR, DIRECTION TYPE, 3 UNIT ARM, 3 WAY
SA 23404	ROUTE INDICATOR, DIRECTION TYPE, 4 UNIT ARM, 4 WAY
SA 23405	ROUTE INDICATOR, DIRECTION TYPE, 5 UNIT ARM, 5 WAY
SA 23406	ROUTE INDICATOR, DIRECTION TYPE, 6 UNIT ARM, 6 WAY

PART No.	DESCRIPTION
	TERMINAL BLOCK (SMALL)
	BOLT
	MOUNTING BRACKET
	MOUNTING BRACKET
	MOUNTING BASE FOR MAST
	NUT
	SPRING WASHER
	BUSH
	PIN BOLT
	MAIN MAST FRAME
	BLANKING PLATE
	LIGHT UNIT
	MAST GROUND
	PIN COVER
	PIN
	COUPLING UNIT COVER
	COUPLING UNIT

R. D. S. O.

ROUTE INDICATOR DIRECTION TYPE 5 UNIT ARM

(1 TO 6 WAY)

SA 23401-06

NOTE

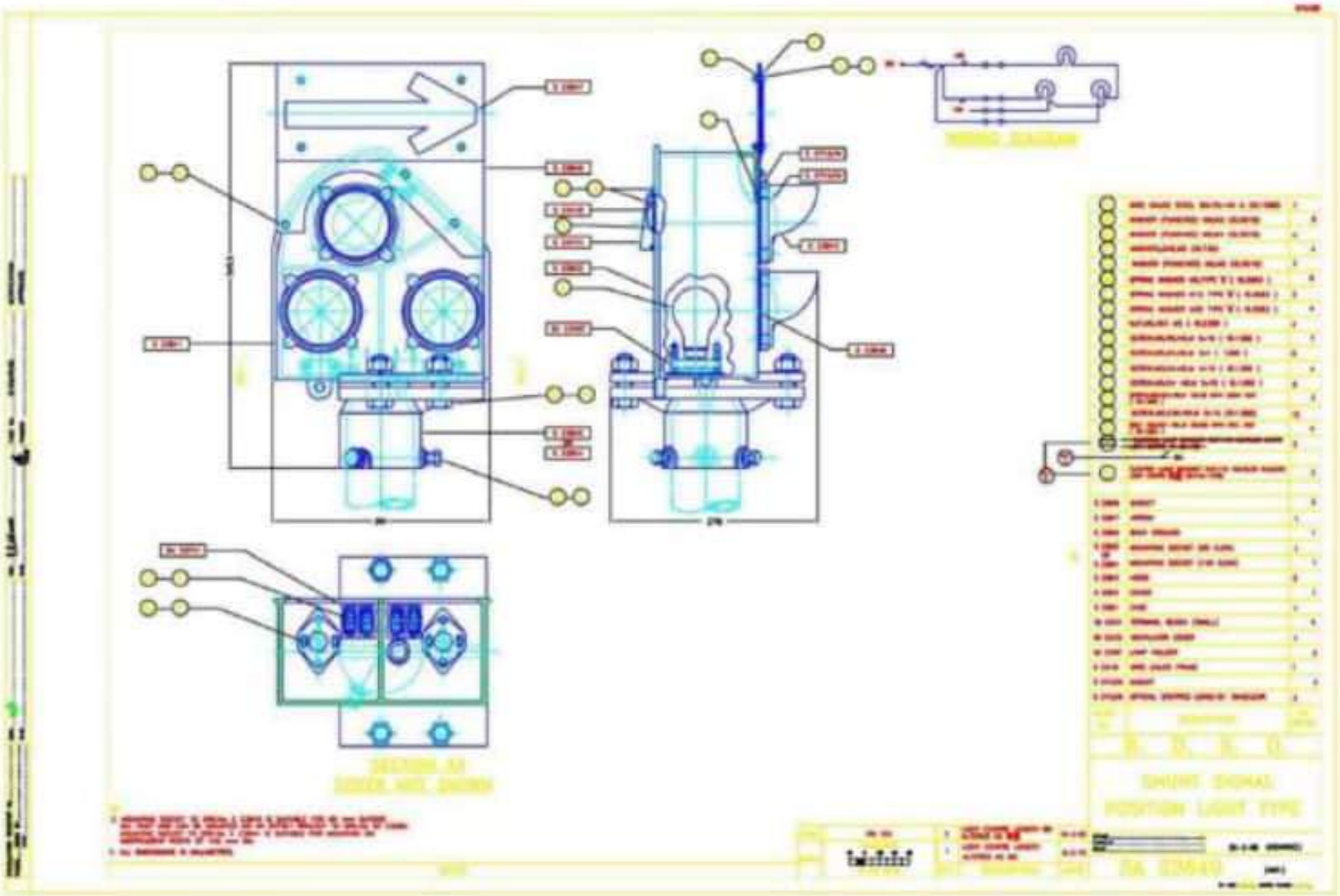
SECTION AA
SHUNT SIGNAL
POSITION LIGHT TYPE

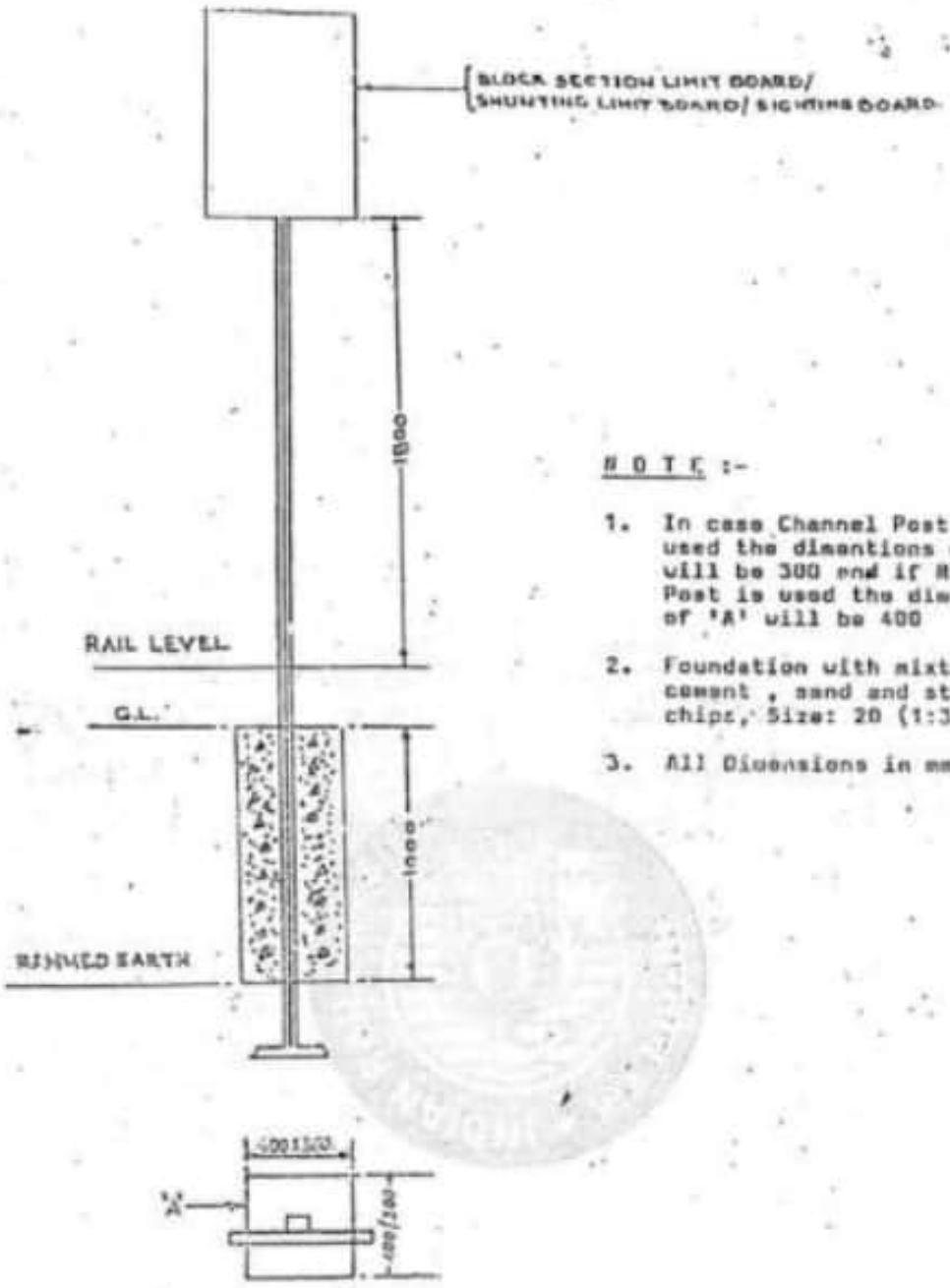

NOTE :-

1. In case Channel Post is used the dimentions of 'A' will be 300 and if Rail Post is used the dimension of 'A' will be 400
2. Foundation with mixture of cement , sand and stone chips, Size: 20 (1:3:6)
3. All Dimensions in mm

	CHECKED		APPROVED		
E.R.		Bhaskar 15.4.93	Salang 15.4.93	FOUNDATION FOR BLOCK SECTION LIMIT BOARD/SHUNTING LIMIT BOARD/SIGHTING BOARD.	DRG. No. SH 7/C-34 (NFS)

SHEET

RETRO REFLECTING YELLOW SHEET SHALL BE PROVIDED (LETTERS IN BLACK ON YELLOW SHEET OF 600X900mm) TO BE FIXED ON 600X900mm MS SHEET 3mm THICK

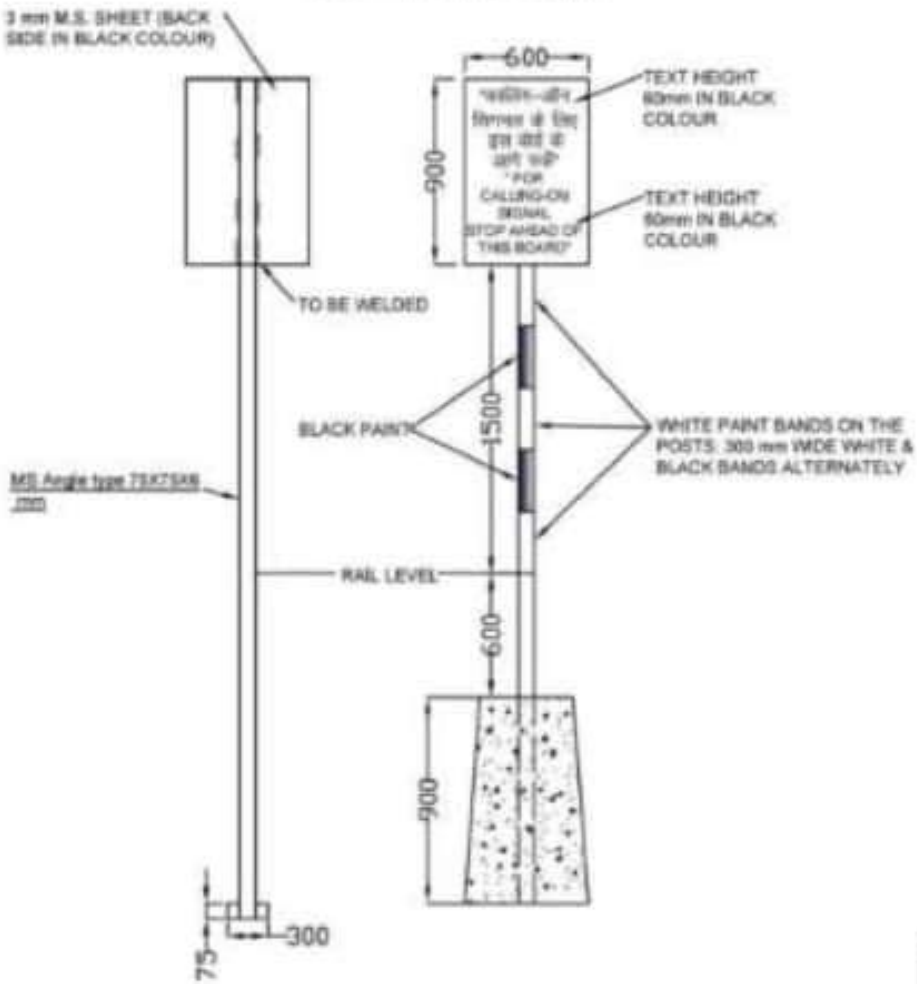

1. ALL DIMENSIONS ARE IN MILLIMETRES.

2. CALLING ON SIGNAL BOARD IS TO BE ERECTED AT THE START OF THE CALLING OF THE TRACK CIRCUIT JOINT IN REAR OF HOME SIGNAL

PREPARED BY:	CHECKED BY:	ISSUED BY:	NOT TO SCALE			23.07.25
NOTE			SCALE	ALT	DESCRIPTION	DATE

R. D. S. O.

कालिंग–ऑन बोर्ड

CALLING-ON BOARD

SDO/S&T/CALLING-ON BOARD /1020

Approved by PCD/S&T/RDSO of Note no#32 of e-office file no-RDSO-SIGNLEDS(GEN)/1/2021-SIGNAL DIRECTORATE (Computer No. 89877)

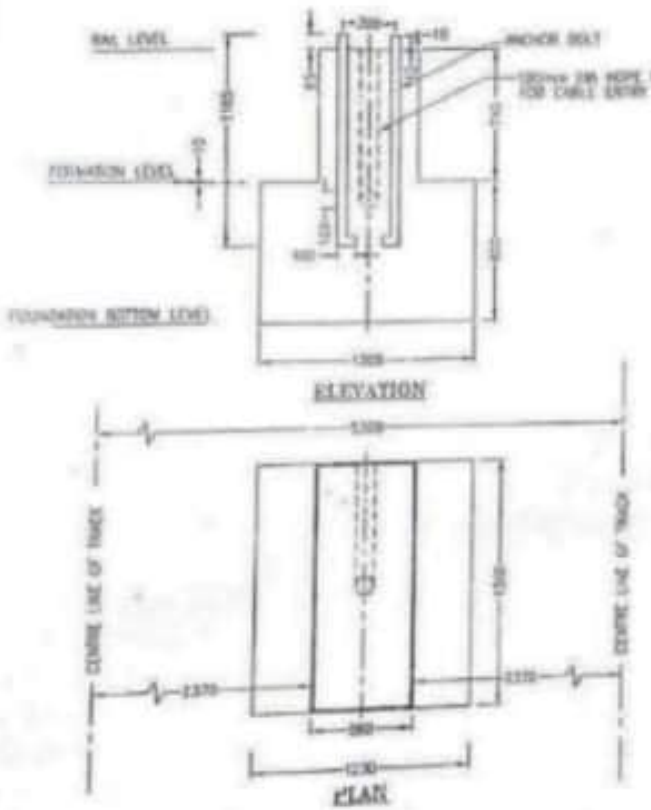

NOTES:

1. CHECKING OF HOLES TO BE DONE IN THE CONCRETE BASE BLOCK USING THE MEASUREMENTS OF THE SURFACE BASE AND CIRCLE WITH ALIGNING THE FOUR HOLES OF THE SURFACE BASE WITH BOLT LOCATION BY PRICKING TEMPLATE.
2. [illegible] DIA. HDPE PIPE [illegible] BE EMBEDDED DURING CASTING ITSELF.
3. AFTER CASTING OF BASE AND CURING OF THE SAME IS OVER, THE FOUR SIDES OF THE BASE TO BE CLEANED OF ALL LOOT DUST CONCRETE AND SIDES TO BE FILLED WITH SURPLUS SOIL AND DUCK COMPACTED IN LAYERS UPTO FOUNDATION LEVEL.
4. WHERE REQUIRED PITCHING ON THE RIVERINE SIDES OF THE RAMPED SURFACE WITH 225 TO 300mm SIZE BOULDERS SHALL BE DONE & FILLING THE CRICKETS WITH 1:8:12 CONCRETE WITH FINE 20mm TRIMM CHIPS. PITCHING WILL BE UPTO THE FULL HEIGHT OF THE RAMPED DAMS.
5. [illegible] IS TO BE FILLED UP WITH SAND & [illegible] BY A LAYER OF 25mm THICK CEMENT PLASTER AFTER [illegible] OF CABLE AND [illegible] OF SIGNAL POST.
6. THIS DRAWING OF MASS CONCRETE FOUNDATION IS SUITABLE FOR SUPPORTING WITH LINE SIGNAL POST AS PER SIGNAL DIRECTORATE/RDSO'S ESTIMATE DRAWING NO. [illegible] DATED [illegible] & [illegible] FURTHER REQUIREMENTS PROVIDED VIDE NOTE NO. [illegible] DATED [illegible] & [illegible]
7. THE DESIGN IS SUITABLE FOR OVERALL HEIGHT OF MAIN LINE SIGNAL POST UP TO [illegible] OF SIGNAL BASE WITH POWER INDICATOR HAVING [illegible] ARMS. DIAMETER OF SIGNAL POST HAS BEEN TAKEN AS [illegible] IN THE DESIGN. LOADS HAVE BEEN TAKEN AS PER S&T NOTE NO. [illegible] DATED [illegible] OF SIGNAL DIRECTORATE.
8. UNIT WEIGHT OF CONCRETE HAS BEEN TAKEN AS 24 kN/m³ AS PER [illegible] OF IRS BRIDGE SUBSTRUCTURES & FOUNDATION CODE.
9. CONCRETE GRADE OF MIX FOR PEDESTAL HAS BEEN TAKEN M-20 FOR SEVERE ENVIRONMENT EXPOSURE CONDITION AS SPECIFIED IN CLAUSE 5.4.4 OF IRS CONCRETE BRIDGE CODE.
10. MINIMUM SAFE BEARING CAPACITY OF SOIL HAS BEEN TAKEN AS [illegible] kN/m².
11. THE FOUNDATION IS SUITABLE FOR MAXIMUM WIND SPEED UPTO [illegible] km/h.
12. IT HAS BEEN ASSUMED THAT NO OTHER HORIZONTAL FORCE IS BEING APPLIED EXCEPT WIND FORCE.
13. THIS DRAWING HAS BEEN PREPARED IN CONSULTATION WITH SIGNAL DIRECTORATE/RDSO AND AS PER REQUIREMENTS OF SIGNAL DIRECTORATE. IN REFERENCE TO [illegible] LETTER NO. [illegible] DATED [illegible].
14. THIS DRAWING SUPERSEDES EARLIER DRAWING NO. [illegible] AND 3 DATED [illegible].
15. ALL DIMENSIONS ARE IN [illegible] UNLESS OTHERWISE SPECIFIED.

R. D. S. O.

RDSO/M-00011/B4

"G" MARKER RETRO REFLECTIVE SHEET

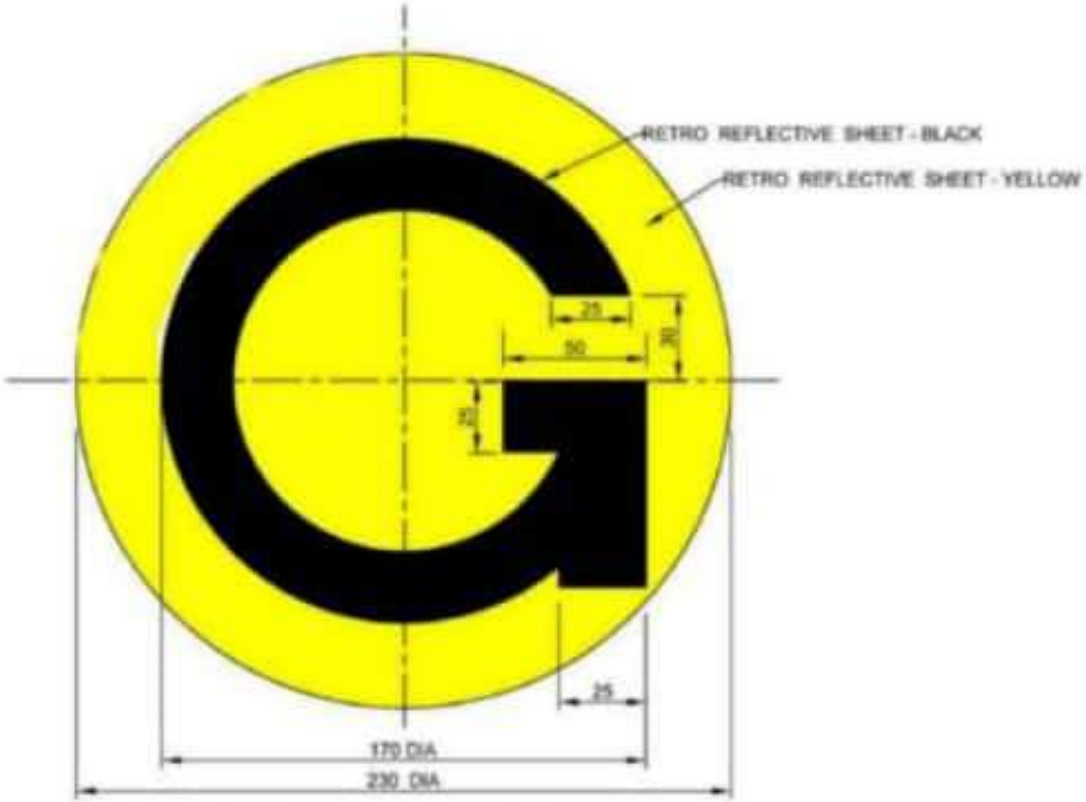

MATERIAL :-

RETRO REFLECTIVE SHEET HIGH INTENSITY GRADE YELLOW WITH
IMPRINTED 'G' IN BLACK
WITH FILM THICKNESS 0.3 mm
TOLERANCE AS PER APPLICABLE
NOTE :- ALL DIMENSIONS ARE IN mm

PRINT IN COLOUR

FOR GUIDANCE

Drg.No. 19-D10 (Sheet 4 of 10)

"C" MARKER RETRO REFLECTIVE SHEET

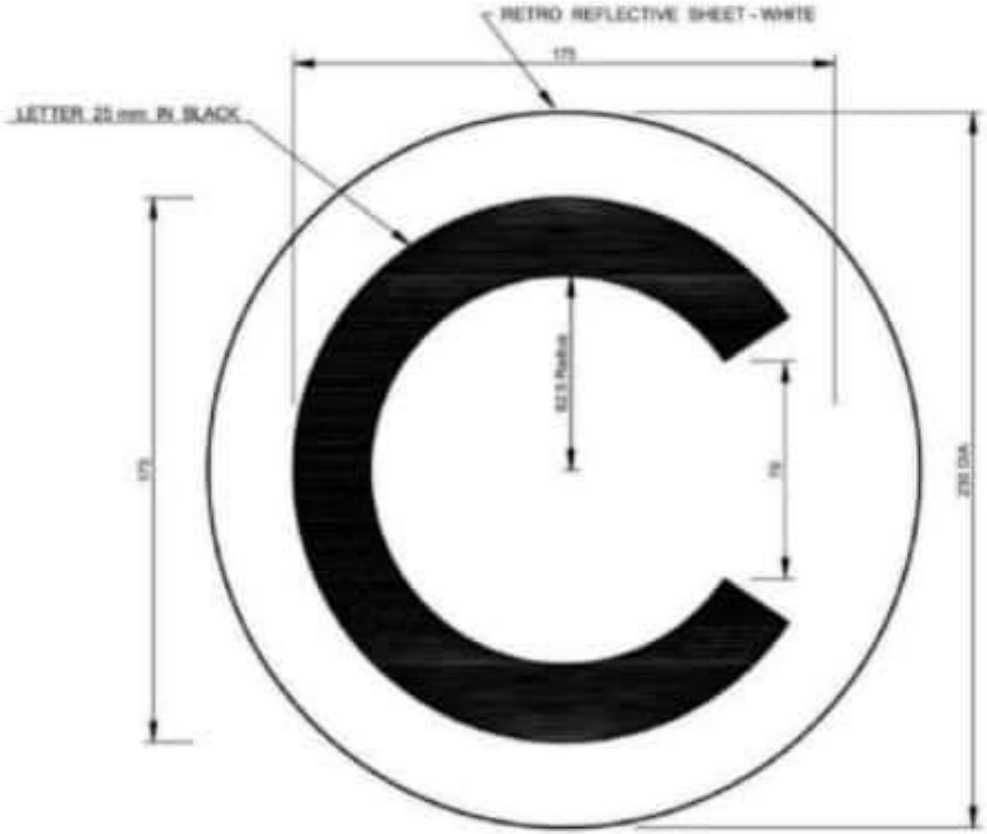

MATERIAL :-

RETRO REFLECTIVE SHEET HIGH INTENSITY GRADE WHITE WITH
IMPRINTED 'C' IN BLACK
WITH FILM THICKNESS 0.3 mm
TOLERANCE AS PER APPLICABLE
NOTE :- ALL DIMENSIONS ARE IN mm

FOR GUIDANCE

"P" MARKER RETRO REFLECTIVE SHEET

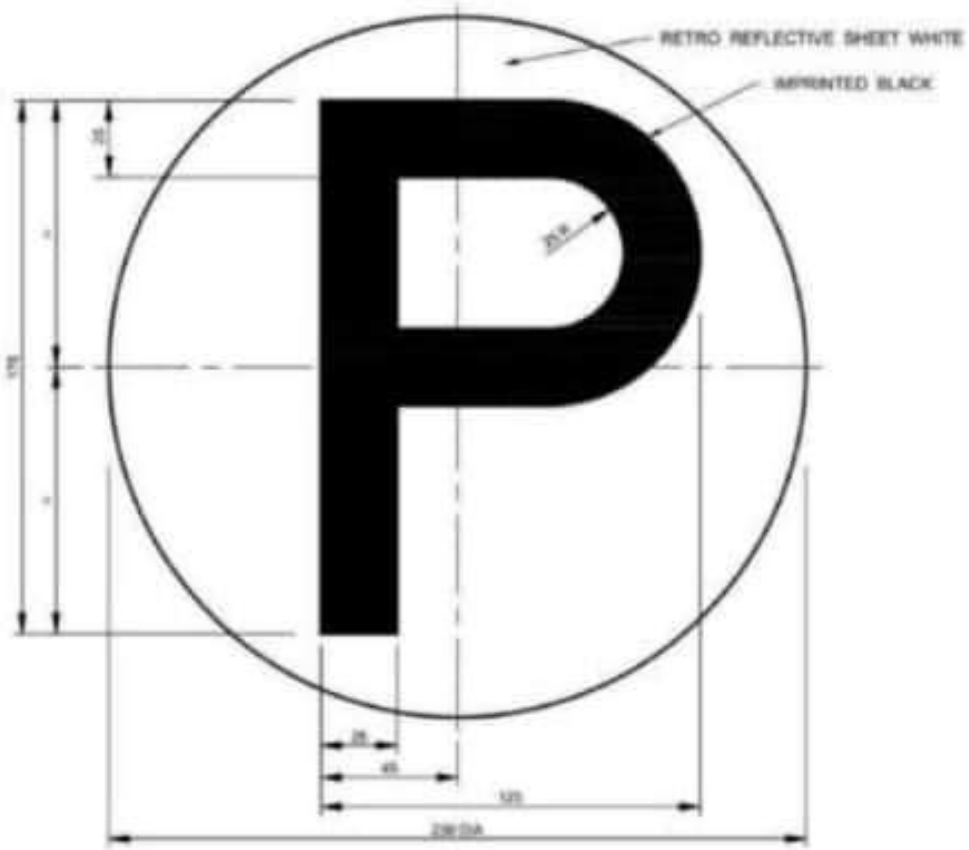

MATERIAL :-

RETRO REFLECTIVE SHEET HIGH INTENSITY GRADE WHITE WITH
IMPRINTED 'P' IN BLACK
WITH FILM THICKNESS 0.3 mm
TOLERANCE AS PER APPLICABLE
NOTE :- ALL DIMENSIONS ARE IN mm

FOR GUIDANCE

Drg.No. 19-D10 (Sheet 6 of 10)

SIGNAL NUMBER PLATE (DOUBLE DIGIT) RETRO REFLECTIVE SHEET

MATERIAL :-

PRESSURE SENSITIVE TYPE RETRO REFLECTIVE SHEET HIGH INTENSITY
GRADE WHITE WITH IMPRINTED NUMBER / ALPHABET IN BLACK
WITH FILM THICKNESS 0.3 mm
TOLERANCE AS PER APPLICABLE
NOTE :- ALL DIMENSIONS ARE IN mm

FOR GUIDANCE

Drg.No. 19-D10 (Sheet 7 of 10)

SIGNAL NUMBER PLATE RETRO REFLECTIVE SHEET

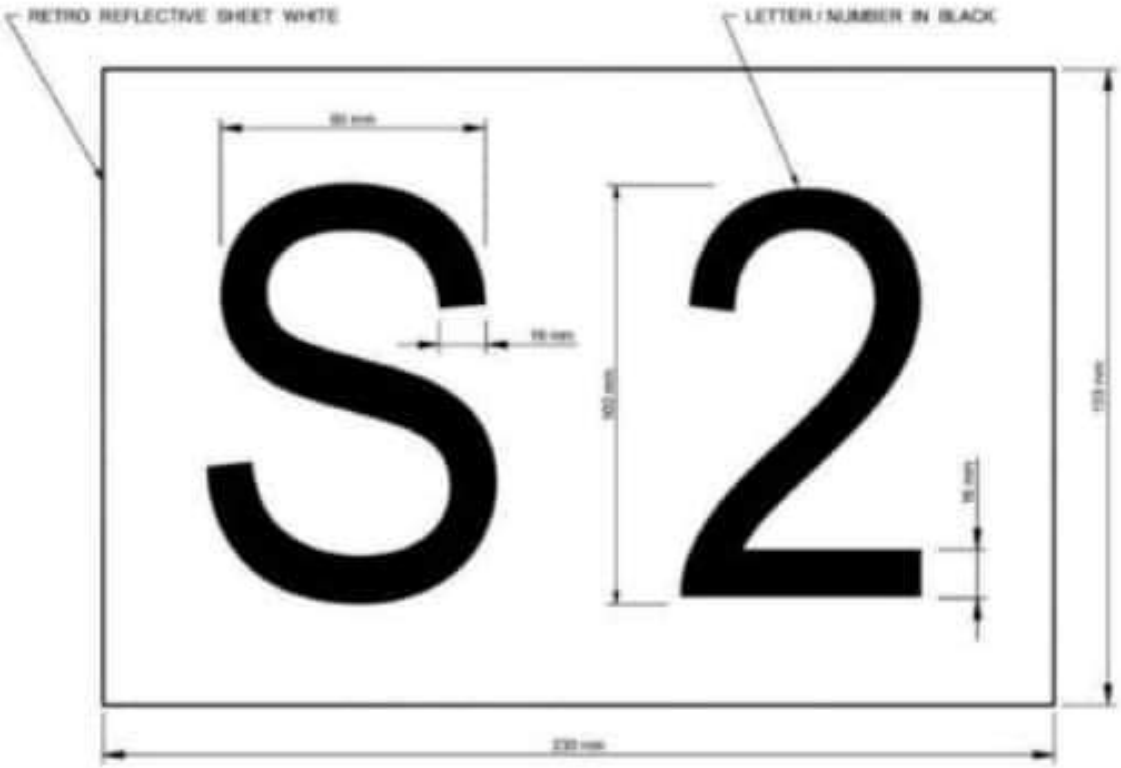

MATERIAL :-

PRESSURE SENSITIVE TYPE RETRO REFLECTIVE SHEET HIGH INTENSITY GRADE WHITE WITH IMPRINTED NUMBER / ALPHABET IN BLACK WITH FILM THICKNESS 0.3 mm

TOLERANCE AS PER APPLICABLE

NOTE :- ALL DIMENSIONS ARE IN mm

FOR GUIDANCE

Drg.No. 19-D10 (Sheet 8 of 10)

ARROW MARKER RETRO REFLECTIVE SHEET

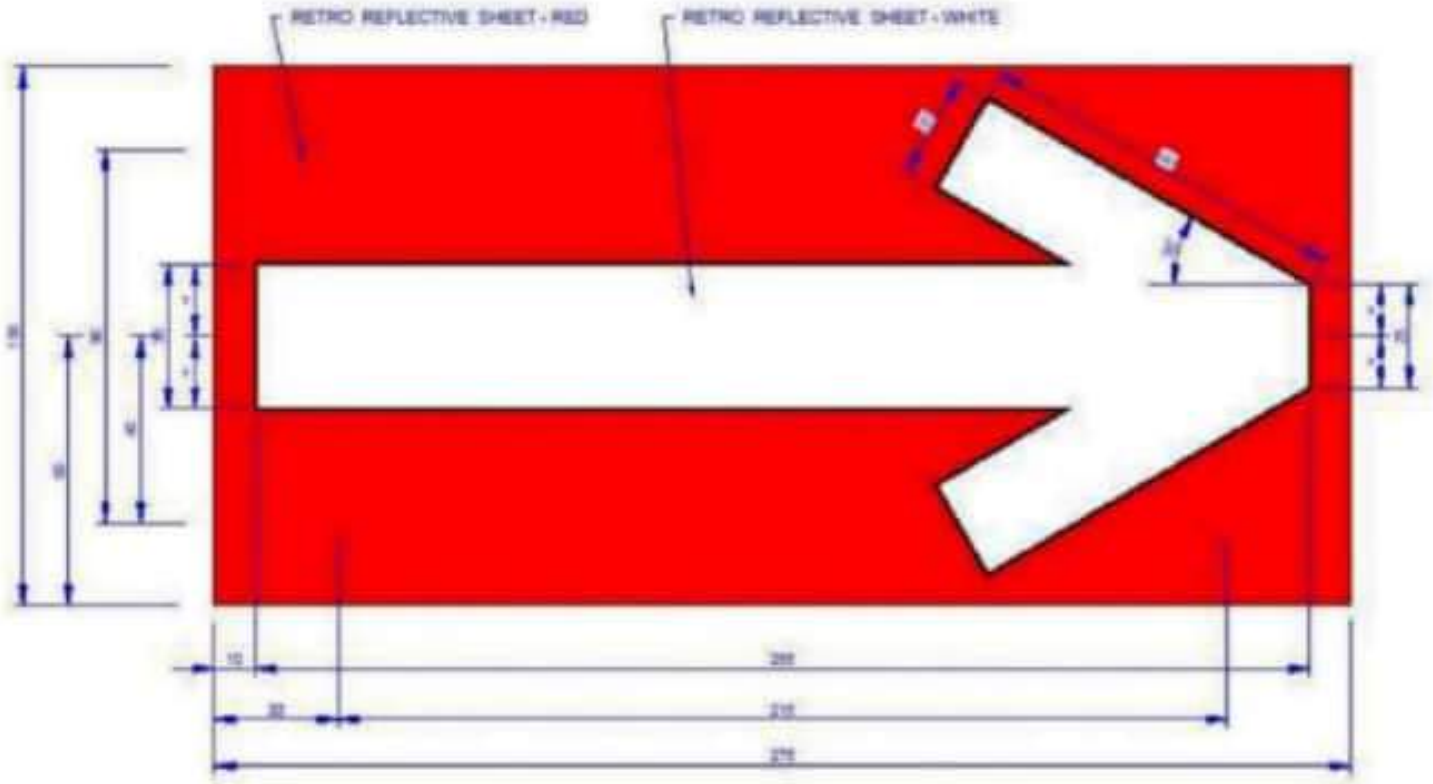

MATERIAL :-

RETRO REFLECTIVE SHEET HIGH INTENSITY GRADE RED WITH
IMPRINTED " ARROW " IN WHITE
WITH FILM THICKNESS 0.3 mm
TOLERANCE AS PER APPLICABLE
NOTE :- ALL DIMENSIONS ARE IN mm

PRINT IN COLOUR

FOR GUIDANCE

S&T Drawing

Chapter - 9

Level Crossing Gates & accessories etc.

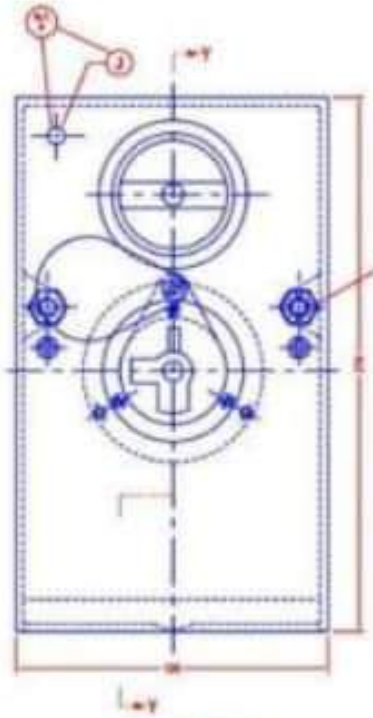

WITH COVER

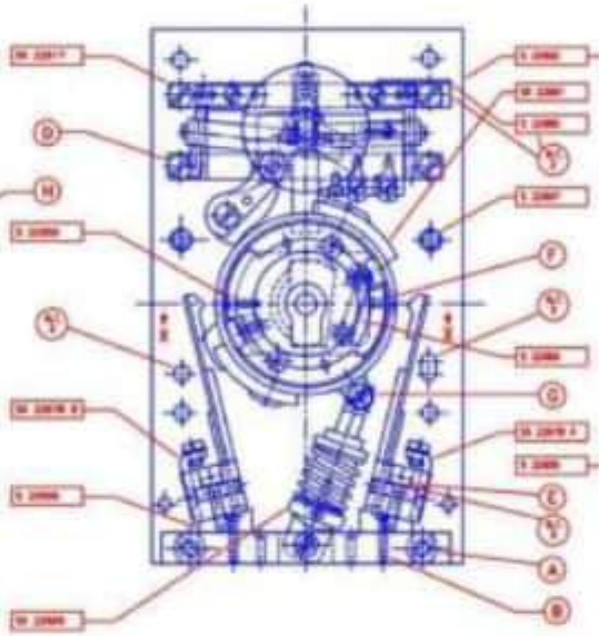

COVER REMOVED & KEY EXTRACTED

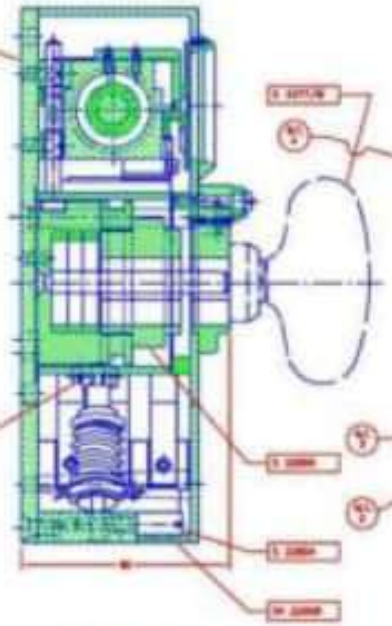

SECTION YY

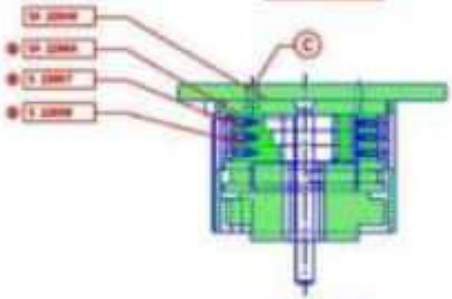

SECTION XX
(KEY LOCKED AND OTHER DETAILS NOT SHOWN)

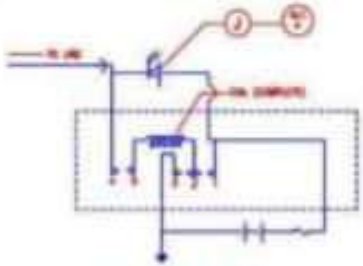

WIRING DIAGRAM
-KEY EXTRACTED

1. DIAGRAM SHOWS CONDITIONS WHEN KEY IS "OUT"
2. 1-2, 4-5 MAKE WHEN TRANSMITTING KEY.
3. 2-3, 4-6 MAKE WHEN KEY "IN"

4. KEY SHALL BE ORDERED SEPARATELY AS PER DRG. No. S 2377/N.
3. @ THE ARRANGEMENT OF THE TUMBLERS OF KEY COMBINATIONS SHALL BE MADE IN ACCORDANCE WITH THE DRG. Nos. S 2378 A/1/M-A/12/M DEPENDING UPON THE TYPE OF KEY AS SPECIFIED BY THE PURCHASER.
2. PARTS ⓖ & ⓘ SHALL BE NICKEL PLATED TO IS : 1572-68 OF 8μ-12μ.
1. ALL DIMENSIONS IN MILLIMETRES.

NOTE

PART OFF	DESCRIPTION	NO. REQD
(J)	[illegible]	1
(H)	SLOTTED NUT MCL HEX NR [illegible]	2
(G)	[illegible]	1
(F)	[illegible]	2
(E)	[illegible]	4
(D)	[illegible]	4
(C)	[illegible]	2
(B)	[illegible]	4
(A)	[illegible]	2
S 22686	STRAP	1
SA 22678 B	CONTACT SPRING ASSEMBLY	1
SA 22678 A	CONTACT SPRING ASSEMBLY	1
SA 22688	QUICK RETURN GEAR	1
SA 22681	DRUM ASSEMBLY	1
S 22680	SPRING	3
S 22684	PIN (L.H.)	3
S 22686	TUMBLER No. 3	AS REQD
S 22687	TUMBLER No. 2	AS REQD
S 22684	TUMBLER No. 1	AS REQD
S 22685	OPERATING PIECE	1
SA 22648	TUMBLER HOUSING ASSEMBLY	1
SA 22617	ELECTRO - MAGNET	1
SA 22668	COVER COMPLETE	1
S 22667	STUD	2
S 22666	METALLIC BASE	2
S 22665	PIN	1
S 22664	THUMB SCREW	1
S 22663	END PLATE	1
S 22662	BASE	1

R. D. S. O.

ELECTRIC KEY TRANSMITTER (ROTARY TYPE)

SA 22601

A1	DESCRIPTION	DATE
4	[illegible]	[illegible]
3	[illegible]	[illegible]
2	[illegible]	[illegible]
1	[illegible]	[illegible]

SPEC. [illegible]

SCALE MILLIMETRES DO NOT SCALE

DRN. [illegible] DATE 7.5.95 ADVANCE

SL 2/519 (MOW) FORM 12/87

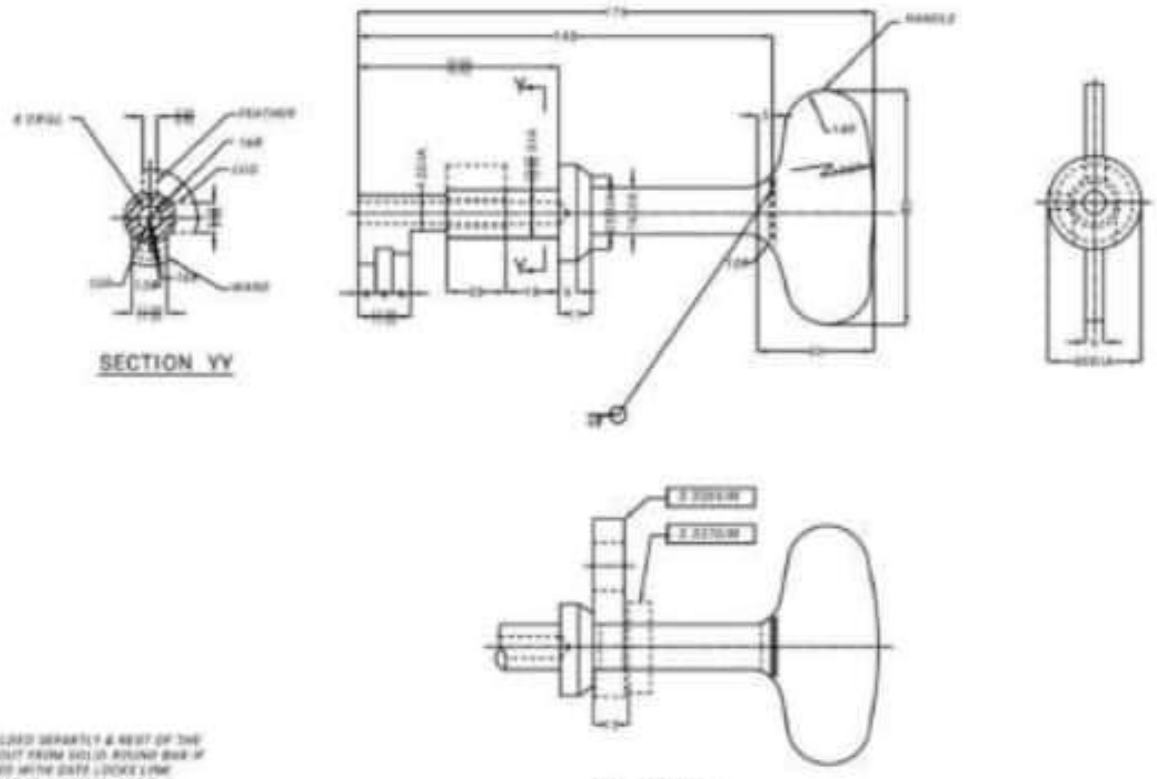

NOTE

1. HANDLE SHALL BE WELDED SEPARATELY & REST OF THE KEY MAY BE TURNED OUT FROM SOLID ROUND BAR IF THE KEY IS TO BE USED WITH DATE LOCKS LIKE (3) SHANK SHALL FIRST BE INSERTED INTO THE KEY SHANK AND COLLAR (3 EXTRA) WELDED IN POSITION AS SHOWN IN SKETCH 'a' IN LINE DOTTED BEFORE HANDLE IS WELDED.
2. THE TYPE OF WARD ON THE KEY SHALL ALSO BE IN ACCORDANCE WITH THE DRAWING NO. S3776/1-M-WARDM AS SPECIFIED BY THE PURCHASER.
4. POSITION OF FEATHER & LUG WITH RESPECT TO WARD SHALL BE ACCORDING TO THE TYPE OF KEY SPECIFIED BY THE PURCHASER TO DRAWING NO. S 3376/1/M-WARD/M.
3. RAD OF FEATHER, LUG & WARD SHALL NOT DEVIATE BY MORE THAN +-0.1 UNLESS OTHERWISE SPECIFIED.
2. ALL DIMENSIONS SHALL BE WITHIN +-0.5, UNLESS OTHERWISE SPECIFIED, DEPENDING UPON RELATED DIMENSION.
1. ALL DIMENSION IN MILLIMETRES.

● ROUGHNESS NUMBER IN MICRONS

	KEY LOCK (E TYPE)	
REF. DATE	DESCRIPTION FOR ASSEMBLY	REF.
	R. D. S. O.	
	KEY LOCK ('E' TYPE)-KEY	
		IRS (S)
		S 3377/M

ALT	DESCRIPTION	DATE

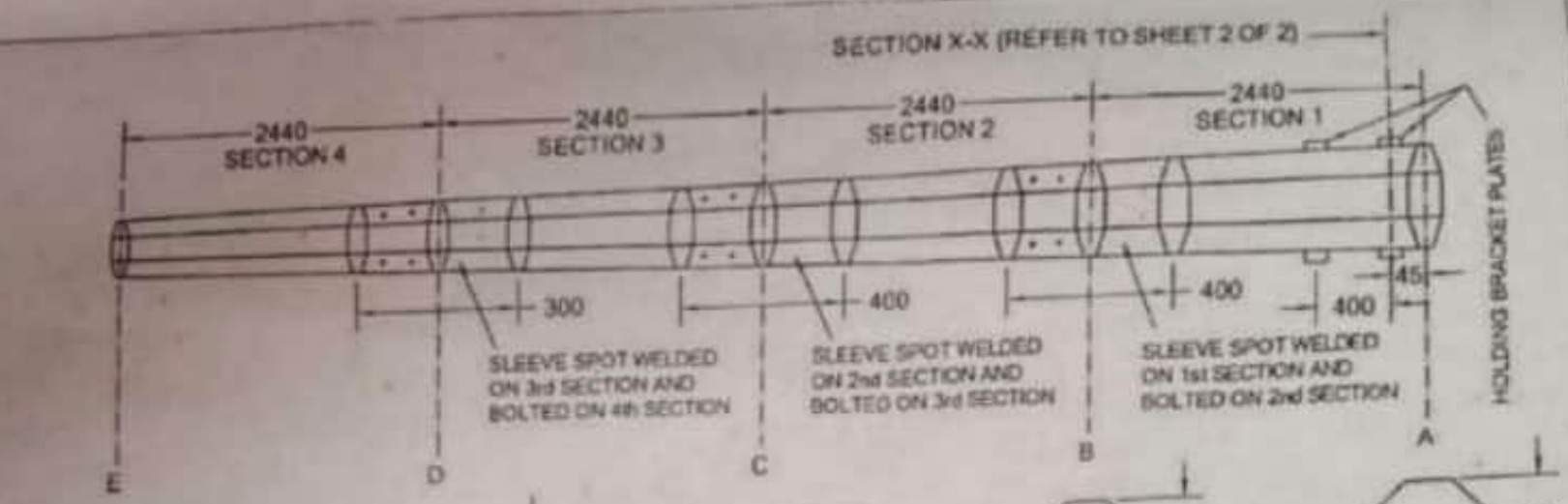

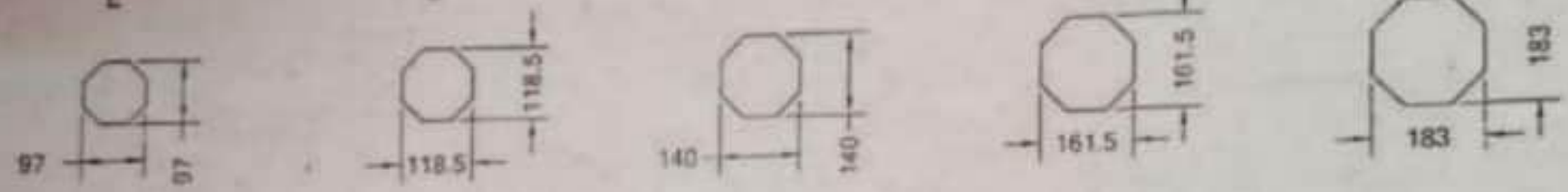

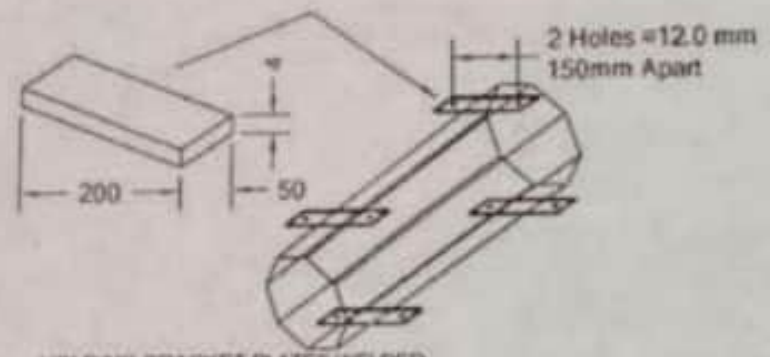

HOLDING BRACKET PLATES WELDED ON 1st SECTION OF BOOM

ALL DIMENSIONS IN MM (NOT TO SCALE)	
HOLDING BRACKET PLATES	
Total	4 Nos.
Material	IS:2062
BOLTS & NUTS	
Total	24 Nos.
Material	SS-202
Size	Hex - 10mm
SHEET THICKNESS	
1st Section	20 Gauge
2nd Section	22 Gauge
3rd Section	22 Gauge
4th Section	22 Gauge

PAINTING

Golden Yellow Powder Coating followed by Black 300 mm Bands with Brush Painting. Yellow Reflective Tape to be fixed on all front & back faces of Yellow Bands of boom

DRN BY– Vinay K 2.8.10

CHD BY– 2.8.10

BOOM OF ELECTRIC LIFTING BARRIER	
MATERIAL FOR BOOM & SUPPORT	IS-277 With Base Metal As Per IS-513 Grade CR3
DRAWING No.	RDSO/S 11600,SH 1 OF 2

DETAILS OF SECTION JOINTS OF BOOM

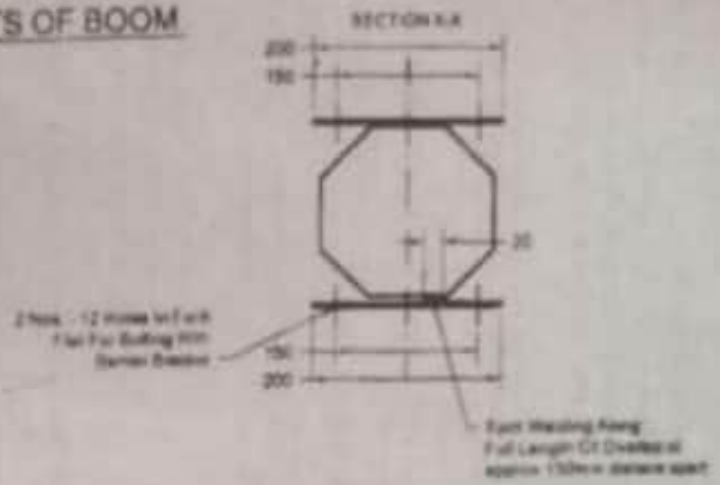

FIRST AND SECOND JOINT

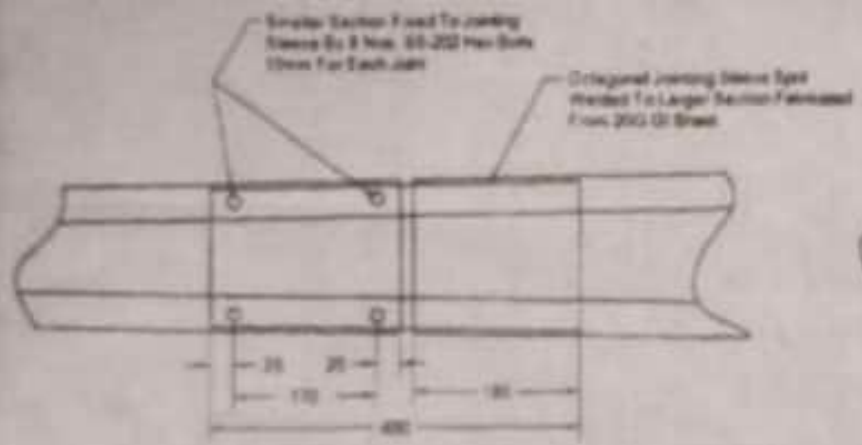

THIRD JOINT

TOLERANCE OF HOLE CENTERS : ±2mm

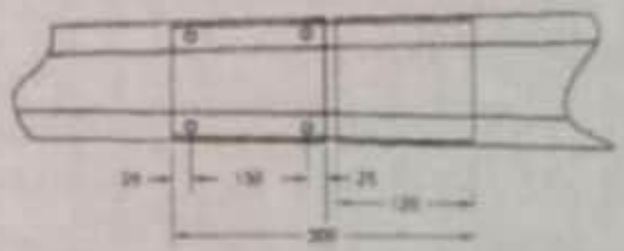

ALL DIMENSIONS IN MM (NOT TO SCALE)

DRN BY

CHD BY–

BOOM OF ELECTRIC LIFTING BARRIER

DRAWING No. RDSO/B 11600 SH 2 OF 2

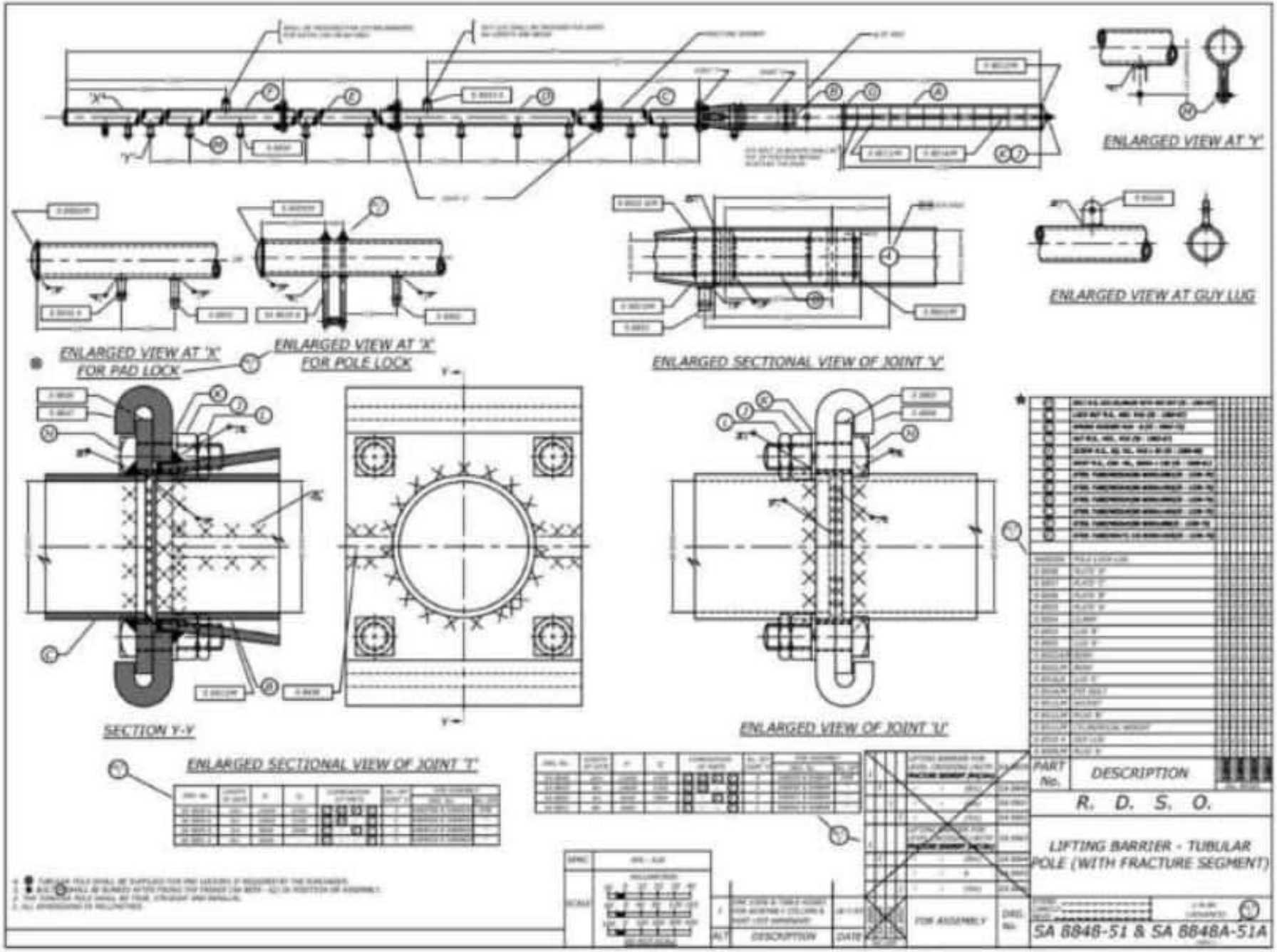
ENLARGED VIEW AT 'Y'
ENLARGED VIEW AT GUY LUG
ENLARGED VIEW AT 'X' FOR PAD LOCK
ENLARGED VIEW AT 'X' FOR POLE LOCK
ENLARGED SECTIONAL VIEW OF JOINT 'V'
SECTION Y-Y
ENLARGED VIEW OF JOINT 'U'
ENLARGED SECTIONAL VIEW OF JOINT 'T'
PART No.
DESCRIPTION
R. D. S. O.
LIFTING BARRIER - TUBULAR POLE (WITH FRACTURE SEGMENT)
SA 8848-51 & SA 8848A-51A
FOR ASSEMBLY
DESCRIPTION
DATE
SCALE

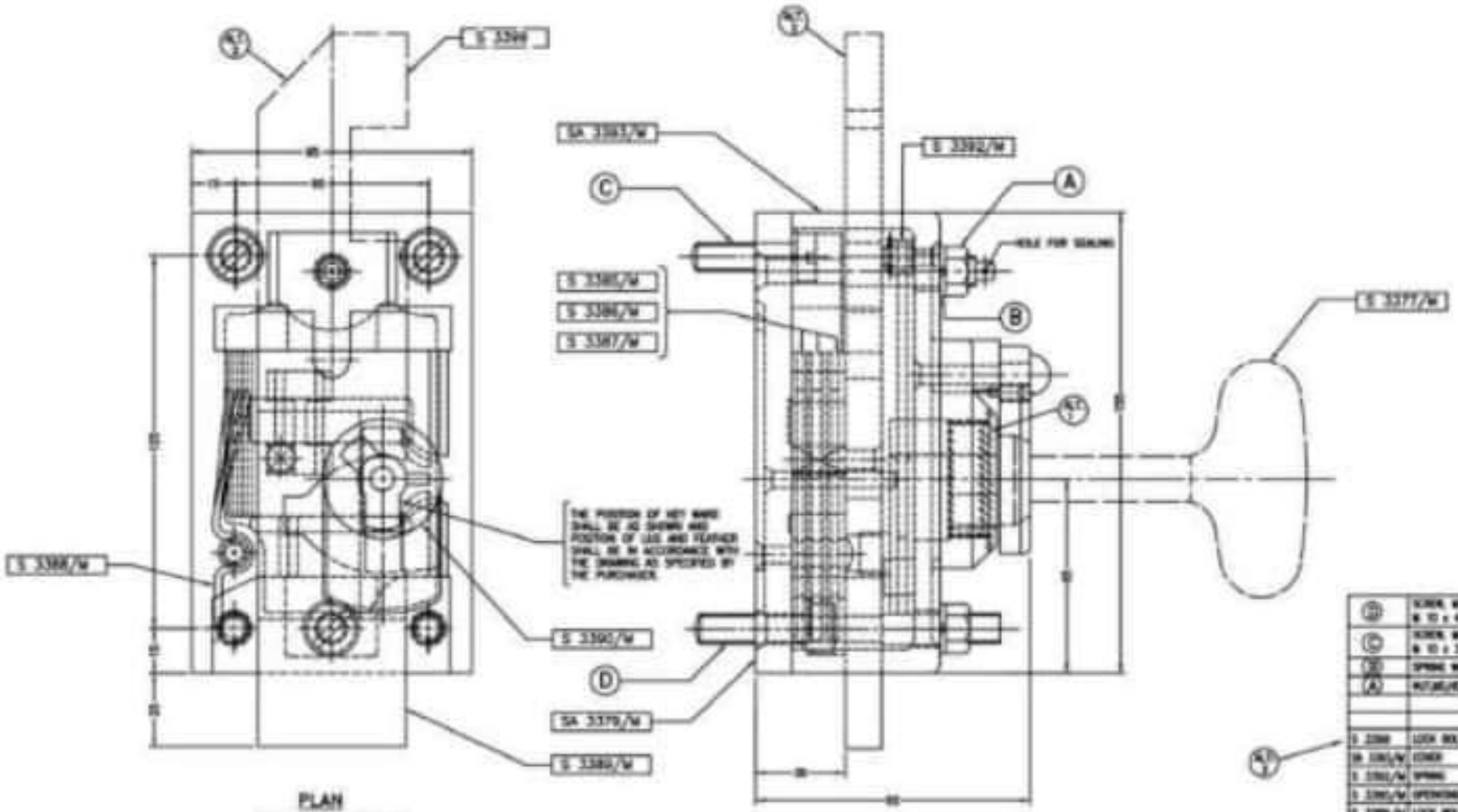

PLAN
WITHOUT COVER

KEY CAN ONLY BE TAKEN OUT WHEN THE LOCK BOLT IS OUT AND KEY WARD IS IN POSITION AS SHOWN

PART No.	DESCRIPTION	SA 3376/M No.	SA 3376/M (RDSO)
(D)	SCREW, MS, CHECK NUT, M 10 x 40 (S : 1366)	1	1
(C)	SCREW, MS, CHECK NUT, M 10 x 35 (S : 1366)	2	2
(B)	SPRING WASHER,AUTO-8 (S : 1363)	8	8
(A)	NUT,M8,HEXAGON (S : 1363)	2	2
S 3396	LOCK BOLT	1	–
SA 3383/W	COVER	1	1
S 3392/W	SPRING	1	1
S 3393/W	OPERATING PIECE	1	1
S 3386/W	LOCK BOLT	–	1
S 3385/W	TUMBLER SPRING	2	2
S 3387/W	TUMBLER No. 3	AS REQD	AS REQD
S 3388/W	TUMBLER No. 2	AS REQD	AS REQD
S 3389/W	TUMBLER No. 1	AS REQD	AS REQD
SA 3378/W	BASE	1	1

R. D. S. O.

KEY LOCK ('E' TYPE)

IRS (S)

SA 3376/M-76A •

4. KEY LOCK 'E' TYPE TO DRG. No. SA 3376A SHALL BE USED FOR WINCH HANDLE LOCKING (SA 81132 A) OF LIFTING BARRIER.
3. KEY SHALL BE ORDERED SEPARATELY AS PER DRAWING No. S 3377/W.
2. THE ARRANGEMENT OF TUMBLER AND KEY COMBINATIONS SHALL BE MADE IN ACCORDANCE WITH THE DRAWING Nos. S 3376A1/M-A42/M DEPENDING UPON THE TYPE OF KEYS AS SPECIFIED BY THE PURCHASER.
1. ALL DIMENSIONS IN MILLIMETRES.

NOTE

SPEC: IRS : S 30 & S 10
SCALE: MILLIMETRES 10 0 10 20 30 — DO NOT SCALE

ALT.	DESCRIPTION	DATE	No.OFF	FOR ASSEMBLY	DRG.No.
2	DRG. No. SA 3376A ADD NOTE & ADDED PART LIST & NEW MODIFIED.	12.11.79			
1	VIEW MARKED	3.8.74			

SI ADD 3/179 MICRO FILMED 12/87.

CALCULATION REGISTER No. ..... FINISH: DONE BY ..... CHD. .....
DRN. G.C. SEN — CHD. G. CHANDRAMANI
TRD. ..... CHD. G.L. MAKHIJA
CASE No. 27/WM/91 — PASSED .....
NOTIFICATION No. ..... APPROVED .....
DRAWING No. SA 3376/M (RDS) INCLUDES UPTO ALT No. NIL OF SA 3376/W (ADV.)

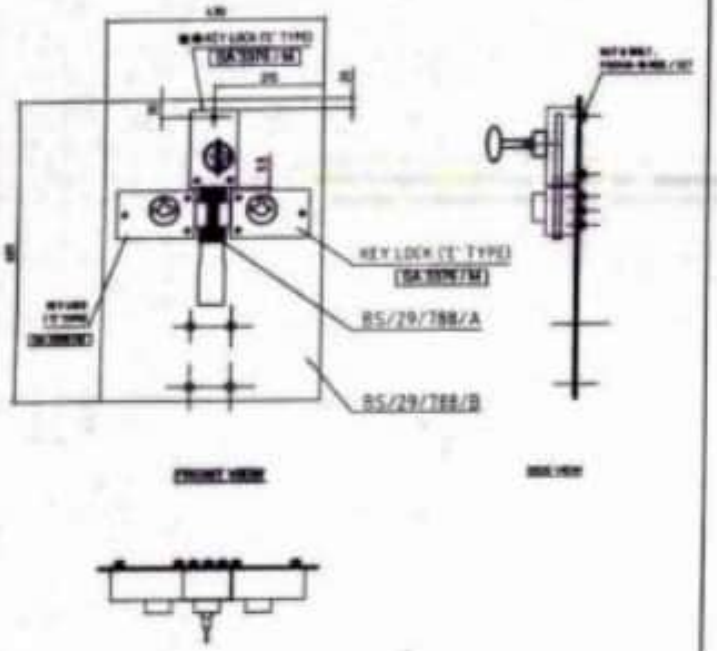

(B) BOOM LOCKING ARRANGEMENT

NOTE:

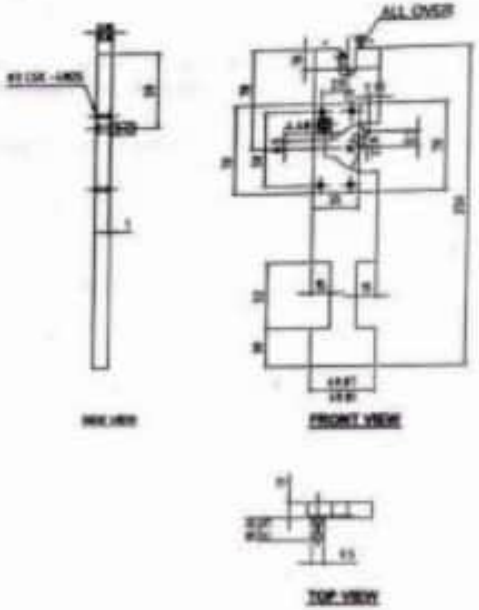

NOTE:
3. MACHINE FINISH (FINE) ALL OVER.
2. LIMITS OF DIMENSION SHALL BE AS PER IRS S : 10 - 79 (LATEST).
1. ALL DIMENSIONS ARE IN MILLIMETRES.

NOTE:
2. LIMITS OF DIMENSION SHALL BE AS PER IRS S : 10 - 79 (LATEST).
1. ALL DIMENSIONS ARE IN MILLIMETRES.

FILE OR ROUGH GROUND

MACHINE FINISH (ROUGH) UP 40 TO 80

MACHINE FINISH (MEDIUM) UP 16 TO 40

MACHINE FINISH (FINE) UP TO 16

ROUGHNESS NUMBER IN MICRONS

	KEY LOCK ('E' TYPE)	
	LOCK MOUNTING PLATE	
	LOCK BOLT OF 'E' TYPE LOCK	
PART NO	DESCRIPTION	NO REQD

SIGNAL WORKSHOP / ER / HOWRAH

SLIDING BOOM (RECTANGULAR SECTION) - LC GATE - BOOM LOCKING ARRANGEMENT

SPEC : IRS : S10

SCALE : MILLIMETRES 10 0 10 20 DO NOT SCALE

FOR ASSEMBLY

DRG. NO. SW / SA / 29 / 768

	BOOM LOCKING ARRANGEMENT	
	DESCRIPTION	NO
	FOR ASSEMBLY	

SIGNAL WORKSHOP / ER / HOWRAH

BOOM LOCKING ARRANGEMENT - LOCK BOLT OF 'E' TYPE LOCK

SCALE : MILLIMETRES 10 0 10 20 DO NOT SCALE

DRG. NO. SW / S / 29 / 768 / A

	BOOM LOCKING ARRANGEMENT	
	DESCRIPTION	NO
	FOR ASSEMBLY	

SIGNAL WORKSHOP / ER / HOWRAH

BOOM LOCKING ARRANGEMENT - LOCK MOUNTING PLATE

SCALE : MILLIMETRES 10 0 10 20 DO NOT SCALE

DRG. NO. SW / S / 29 / 768 / B

APPROVED	VERIFIED		CHECKED		DRAWN	SPEC : IRS : S10	SIGNAL WORKSHOP / ER / HOWRAH.
(P.K.DAS)	(A. KUMAR)	(B.K.MAHOTI)	(S.GHOSH MAZUM)	(S. MONDAL)	(A.K.Sinha)	SCALE : MILLIMETRES 10 0 10 20 DO NOT SCALE	SLIDING BOOM (RECTANGULAR SECTION)) - LC GATE
							DRG. NO. SW / SA /29 / 768 — SHEET: 21 OF 21

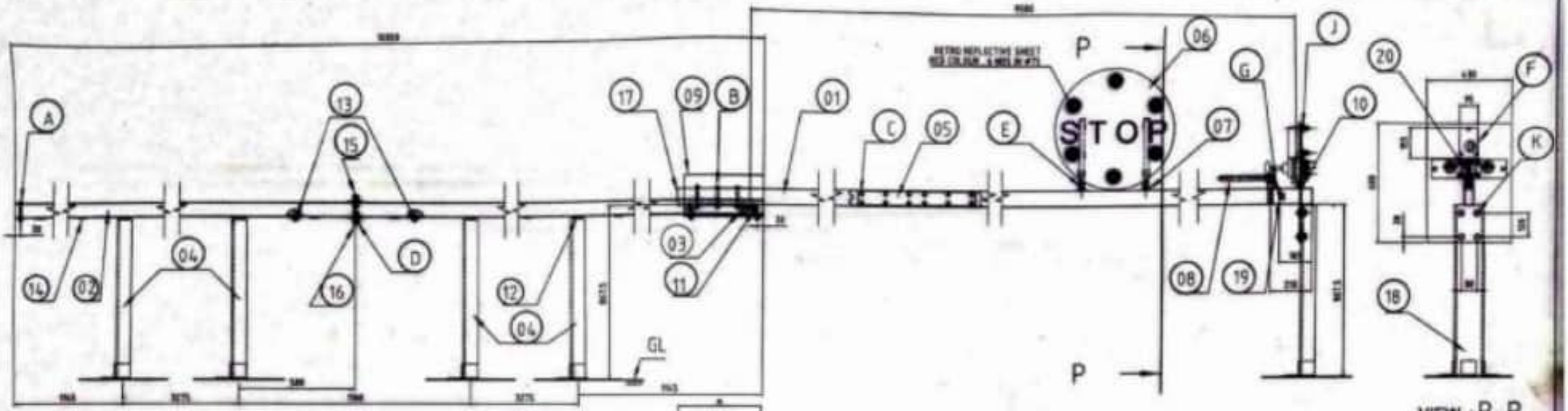

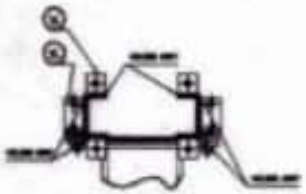

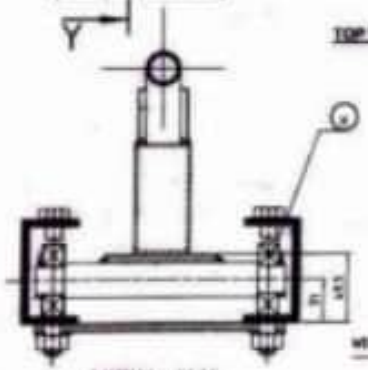

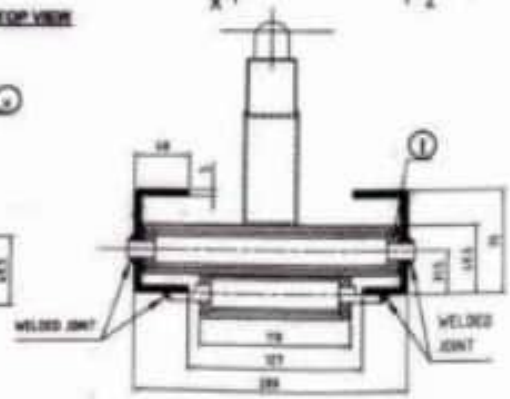

				20	SW/SA/29/T96	BOOM LOCKING ARRANGEMENT	01	21
				19	SW/S/29/T97	BRACKET FOR CHAIN	01	20
				18	SW/SA/29/T98	REST POST	01	19
				17	SW/S/29/T93	BOOM END PLATE	02	18
				16	SW/S/29/T94	JOINING BRACKET SMALL	06	17
				15	SW/S/29/T93	JOINING BRACKET BIG	04	16
				14	SW/S/29/T93	SUPPORT PLATE FOR GUIDE TRAY	11	15
				13	SW/SA/29/T91	IDLER ROLLER	02	14
K	M.S BOLT & NUT M16 X 65 (IS : 1363)	04	12	12	SW/S/29/T90	JOINING PLATE-A	06	13
J	M.S BOLT & NUT M10 X 40, (IS : 1363)	09	11	11	SW/SA/29/T79	FRONT ROLLER	01	12
I	BALL BEARING SKF. NO. 6001 Z / SIMILAR	06	10	10	SW/S/29/T78	BOOM LOCK PIECE	01	11
H	BALL BEARING SKF. NO. 6304 Z Z / SIMILAR	04	09	09	SW/SA/29/T77	PROTECTION BOX	01	10
G	M.S CHAIN 6MM DIA X 3'-00" LENGTH, (Sl:20, IS: 2429 (PART-I))	01	08	08	SW/S/29/T76	BOOM HANDLE	01	09
				07	SW/S/29/T75	BRACKET FOR STOP BOARD	02	08
F	'E' TYPE LOCK WITH KEY OF 3 COMBINATION	03	06	06	SW/S/29/T74	STOP BOARD	01	07
E	M.S BOLT & NUT M 8 X 25, (IS : 1363)	04	05	05	SW/S/29/T73	BOOM JOINING INSERT	01	06
D	M.S BOLT & NUT M12 X 40, (IS : 1363)	08	04	04	SW/SA/29/T72	GUIDE TRAY POST	04	05
C	M.S BOLT & NUT M12 X 65, (IS : 1363)	12	03	03	SW/SA/29/T71	BOOM CARRIER TROLLEY	01	04
B	M.S BOLT & NUT M12 X 135, (IS : 1363)	03	02	02	SW/SA/29/T70	GUIDE TRAY	01	03
A	M.S BOLT & NUT M12 X 100, (IS : 1363)	02	01	01	SW/SA/29/T69	RECTANGULAR BOOM	01	02
PART NO.	DESCRIPTION	NO. REQD.	SL. NO.	PART NO.	DESCRIPTION	NO. REQD.	SL. NO.

NOTE:
5. FOR FIXING KEY LOCK ('E' TYPE) SEE DRG.NO. R/0/50 SA 3376 / M FOR KEY LOCK ('E' TYPE)
4. METALLIC ARC WELDING SHALL BE USED WHEREVER REQUIRED.
3. PAINTING WILL BE DONE AS FOLLOWS :
   i) BOOM SHALL BE PAINTED ALTERNATELY WITH 300mm BANDS OF BLACK & YELLOW.
   ii) STOP BOARD SHALL BE PAINTED FRONT SIDE RED & BACK SIDE BLACK & LETTER " STOP " SHALL BE PASTED WHITE RETRO REFLECTIVE SHEET.
   iii) ALL OTHER PARTS PAINTED BLACK.
2. LIMITS OF DIMENSION SHALL BE AS PER IRS S: 10-78 (LATEST).
1. ALL DIMENSIONS ARE IN MILLIMETRES.

SIGNAL WORKSHOP / ER / HOWRAH.

APPROVED	VERIFIED		CHECKED		DRAWN	SPEC :	IRS : S10
(P.K.DAS)	(J. KUMAR)	(B.K.NANDY)	(B.SHEKHA NAYAK)	(S. MONDAL)	(B.K.BISWAS)	SCALE :	MILLIMETRES 10 0 10 20 DO NOT SCALE
DATE / PLA. / SIGN	DATE / SIGN / SIGN	DATE / SIGN / SIGN	DATE / POST	DATE / SIGN	DATE / DESIG.		

SLIDING BOOM (RECTANGULAR SECTION)) - LC GATE

DRG. NO. SW / SA / 29/768

SHEET:1 OF 21

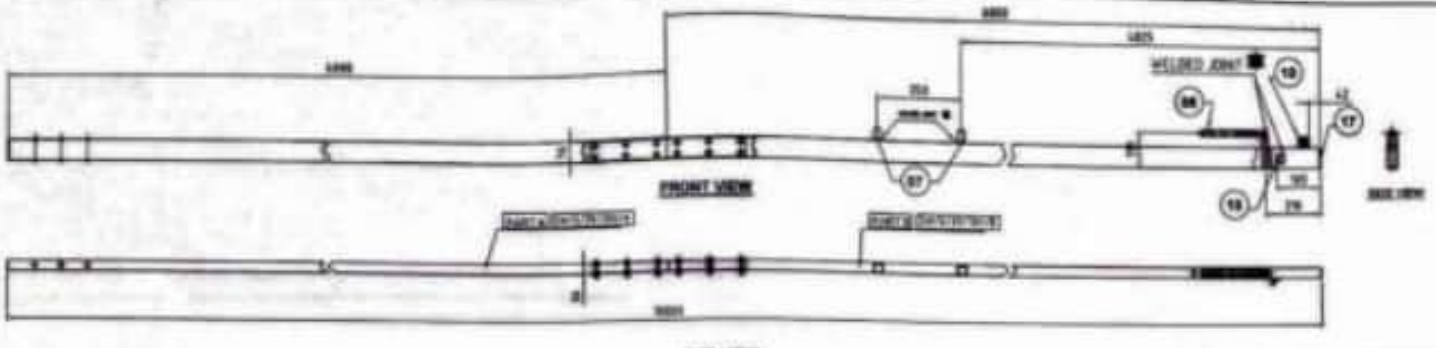

NOTE:
2. LIMITS OF DIMENSION SHALL BE AS PER IRS S : 10 - 78 (LATEST).
1. ALL DIMENSIONS ARE IN MILLIMETRES.

SPEC :	IRS : S10	
SCALE :	MILLIMETRES 10 0 10 20 DO NOT SCALE	

01			
NO OFF	DESCRIPTION	NO	
	FOR ASSEMBLY		

SIGNAL WORKSHOP / ER / HOWRAH.

SLIDING BOOM (RECTANGULAR SECTION)) - LC GATE

DRG. NO. SW/SA/29/768

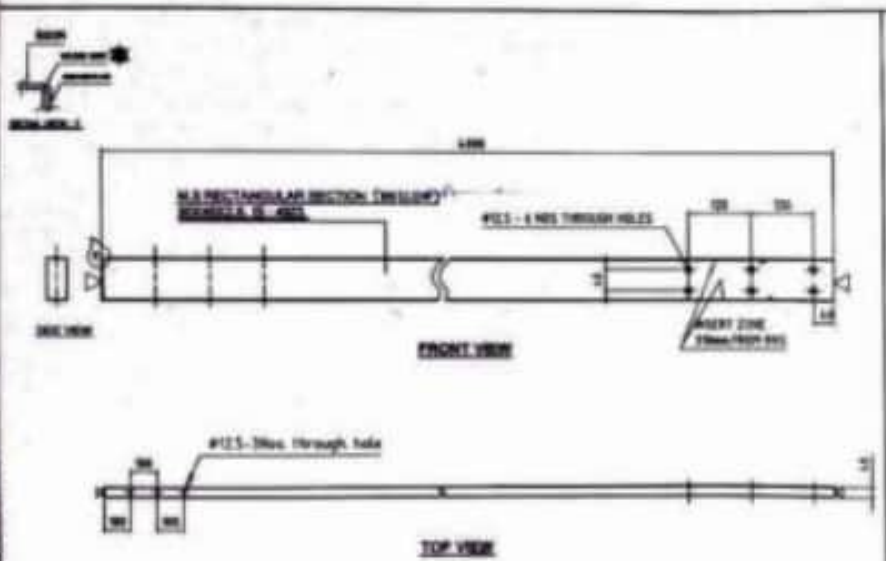

NOTE:
2. LIMITS OF DIMENSION SHALL BE AS PER IRS S : 10 - 78 (LATEST).
1. ALL DIMENSIONS ARE IN MILLIMETRES.

01	RECTANGULAR BOOM	
NO OFF	DESCRIPTION	NO
	FOR ASSEMBLY	

SIGNAL WORKSHOP / ER / HOWRAH.

RECTANGULAR BOOM- PART A

DRG. NO. SW / S / 29 / 768 / A

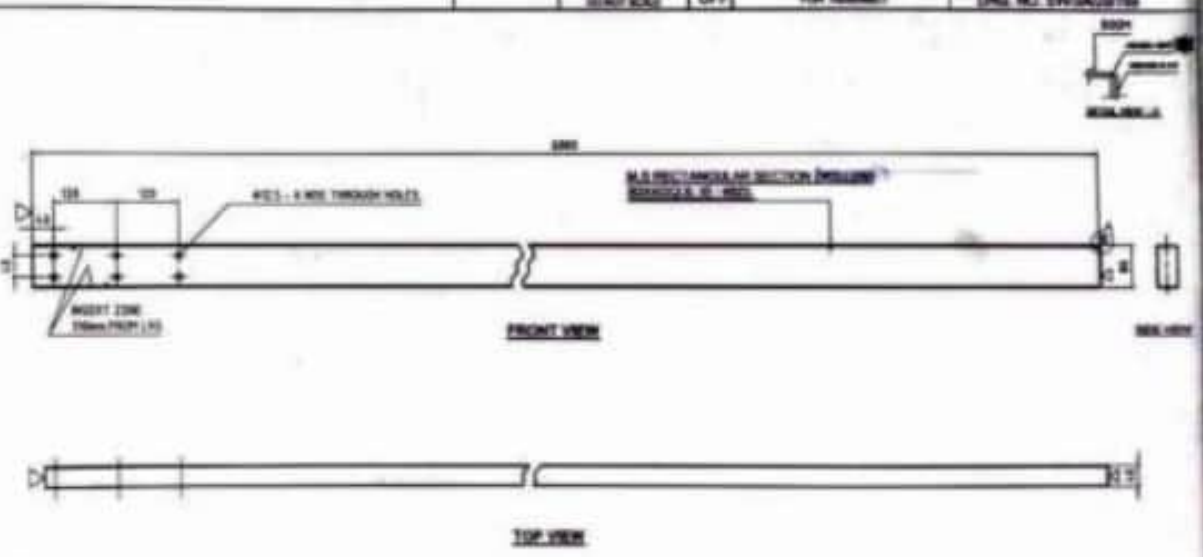

NOTE:
2. LIMITS OF DIMENSION SHALL BE AS PER IRS S : 10 - 78 (LATEST).
1. ALL DIMENSIONS ARE IN MILLIMETRES.

01	RECTANGULAR BOOM	
NO OFF	DESCRIPTION	NO
	FOR ASSEMBLY	

SIGNAL WORKSHOP / ER / HOWRAH.

RECTANGULAR BOOM- PART B

DRG. NO. SW / S / 29 / 768 / B

APPROVED	VERIFIED		CHECKED		DRAWN	SPEC :	IRS : S10	SIGNAL WORKSHOP / ER / HOWRAH.
						SCALE :	MILLIMETRES 10 0 10 20 DO NOT SCALE	SLIDING BOOM (RECTANGULAR SECTION)) - LC GATE
								DRG. NO. SW / SA / 29 / 768 — SHEET:2 OF 21

FILE OR ROUGH GROUND ▲ > 80

MACHINE FINISH (ROUGH) UP 40 TO 80

MACHINE FINISH (MEDIUM) UP 16 TO 40

MACHINE FINISH (FINE) UP TO 16

GROUND

HARDEND GROUND

ROUGHNESS NUMBER IN MICRONS

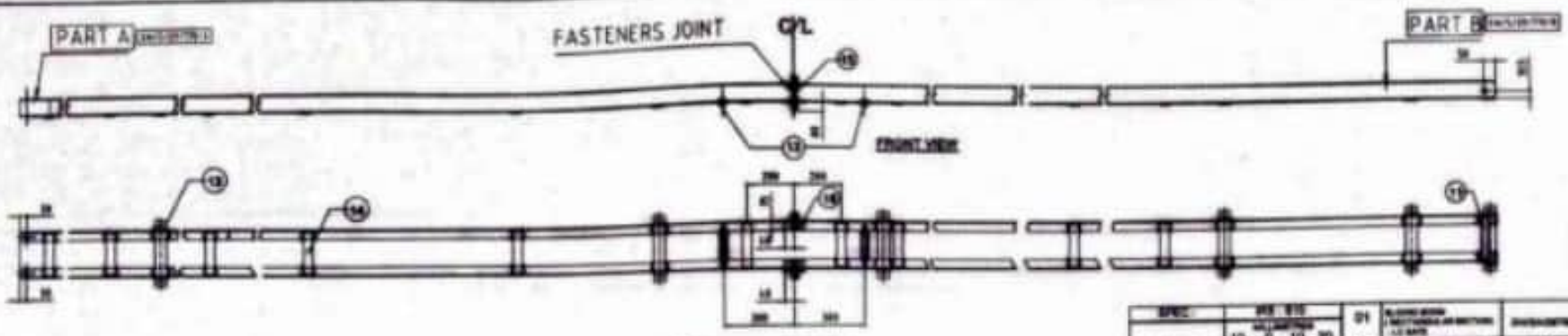

NOTE:
2. LIMITS OF DIMENSION SHALL BE AS PER IRS S-10-76 (LATEST)
1. ALL DIMENSIONS ARE IN MILLIMETRES.

	PART B	01
	PART A	01
PART NO	DESCRIPTION	NO. REQD

SIGNAL WORKSHOP / ER / HOWRAH.

SPEC	IRS : S10	01	SLIDING BOOM (RECTANGULAR SECTION) - LC GATE
SCALE :	MILLIMETRES 10 0 10 20 DO NOT SCALE	NO OFF	DESCRIPTION / NO / FOR ASSEMBLY

SLIDING BOOM (RECTANGULAR SECTION) - LC GATE - GUIDE TRAY

DRG. NO. SW / SA / 29 / 770

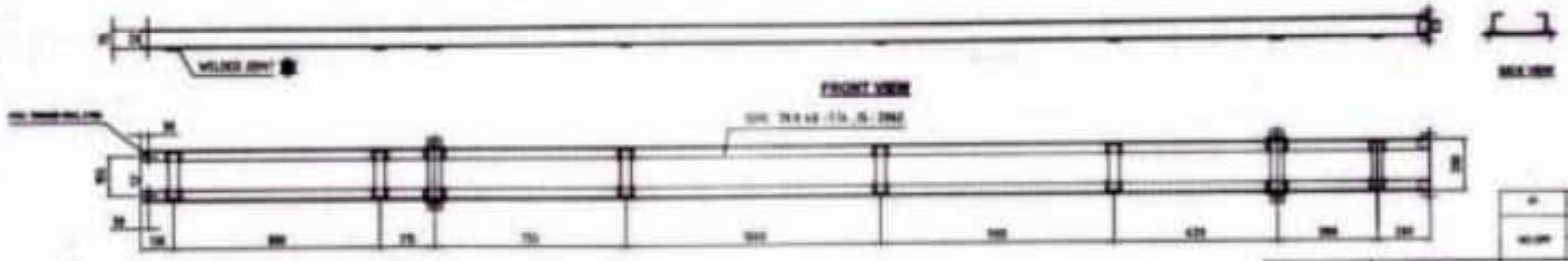

NOTE:
2. LIMITS OF DIMENSION SHALL BE AS PER IRS S-10-76 (LATEST)
1. ALL DIMENSIONS ARE IN MILLIMETRES.

01	GUIDE TRAY	SA/SA/29/770
NO OFF	DESCRIPTION	NO
	FOR ASSEMBLY	

MATL & SPEC.	STEEL IS : 226	SIGNAL WORKSHOP / ER / HOWRAH.
SCALE :	MILLIMETRES 10 0 10 20 DO NOT SCALE	GUIDE TRAY-PART A
		DRG. NO. SW/S /29 /770/A

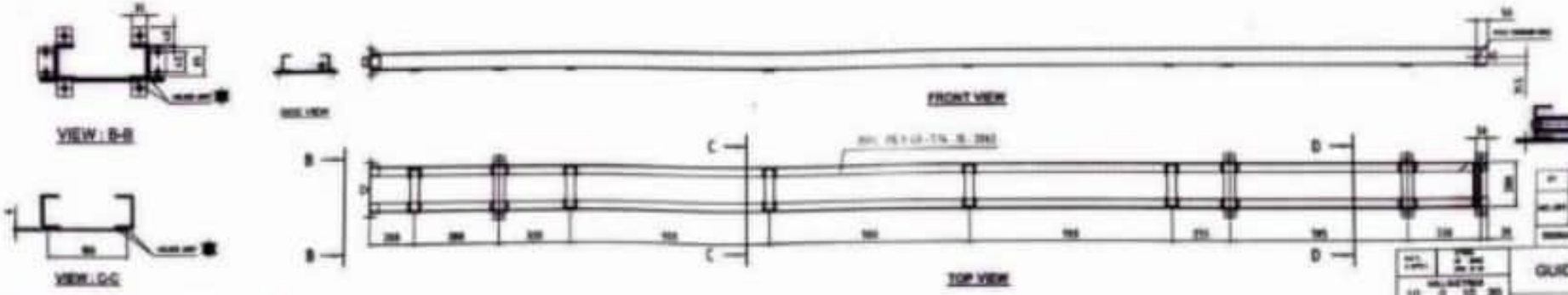

NOTE:
2. LIMITS OF DIMENSION SHALL BE AS PER IRS S-10-76 (LATEST)
1. ALL DIMENSIONS ARE IN MILLIMETRES.

01	GUIDE TRAY	SA/SA/29/770
NO OFF	DESCRIPTION	NO
	FOR ASSEMBLY	

SIGNAL WORKSHOP / ER / HOWRAH.

MATL & SPEC.	STEEL IS : 226	GUIDE TRAY-PART B
SCALE :	MILLIMETRES 10 0 10 20 DO NOT SCALE	DRG. NO. SW / S / 29/770/B

APPROVED	VERIFIED		CHECKED		DRAWN	SPEC :	IRS : S10	SIGNAL WORKSHOP / ER / HOWRAH.
						SCALE :	MILLIMETRES 10 0 10 20 DO NOT SCALE	SLIDING BOOM (RECTANGULAR SECTION) - LC GATE
DATE / FILE / REF.								DRG. NO. SW/SA/29/768 — SHEET: 3 OF 21

FILE OR ROUGH GROUND ▲ > 80

MACHINE FINISH (ROUGH) UP 40 TO 80

MACHINE FINISH (MEDIUM) UP 16 TO 40

MACHINE FINISH (FINE) UP TO 16

GROUND

HARDEND GROUND

ROUGHNESS NUMBER IN MICRONS

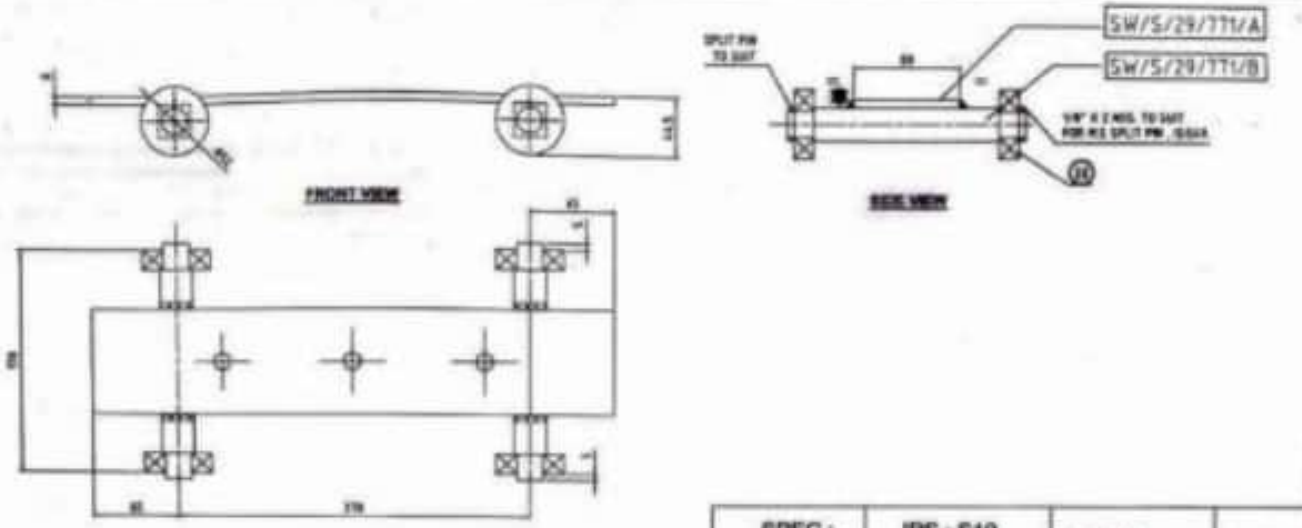

NOTE:
3. SINCE, SKF BALL BEARING NO.6304 ZZ (4 NOS) ARE BEING USED FOR MANUFACTURING PROTOTYPE SLIDING BOOM (RECTANGULAR SECTION) - LC GATE.
2. LIMITS OF DIMENSION SHALL BE AS PER IRS S : 10 - 78 (LATEST).
1. ALL DIMENSIONS ARE IN MILLIMETRES.

SPEC :	IRS : S10	SLIDING BOOM (RECTANGULAR SECTION) - LC GATE	SIGNAL WORKSHOP / ER / HOWRAH
SCALE :	MILLIMETRES 10 0 10 20 DO NOT SCALE	FOR ASSEMBLY	DRG. NO. SW / SA /29 /771

NOTE:
2. LIMITS OF DIMENSION SHALL BE AS PER (IRS S : 10 - 78 (LATEST)
1. ALL DIMENSIONS ARE IN MILLIMETRES.

MATL & SPEC.	STEEL	SIGNAL WORKSHOP / ER / HOWRAH	BOOM CARRIER TROLLEY-SHAFT
SCALE :	MILLIMETRES 10 0 10 20 DO NOT SCALE		DRG. NO. SW / S / 29 / 771 / B

APPROVED	VERIFIED		CHECKED		DRAWN	SPEC :	IRS : S10	SIGNAL WORKSHOP / ER / HOWRAH
(P. K. DAS)	(K. KUMAR)	(B. K. MAITY)	(S. SINGH YADAV)	(S. MISHRA)	(S. K. BISWAS)	SCALE :	MILLIMETRES 10 0 10 20 DO NOT SCALE	SLIDING BOOM (RECTANGULAR SECTION)) - LC GATE
DATE / PUL / KKK	DRW / SW / SMC	AMEN / SW / HRH	SSE / PCD	SSE / MAP	SSE / DRG.			DRG. NO. SW/SA/29/768

FILE OR ROUGH GROUND ▲ > 80

MACHINE FINISH (ROUGH) UP 40 TO 80

MACHINE FINISH (MEDIUM) UP 16 TO 40

MACHINE FINISH (FINE) UP TO 16

GROUND

HARDEND GROUND

ROUGHNESS NUMBER IN MICRONS

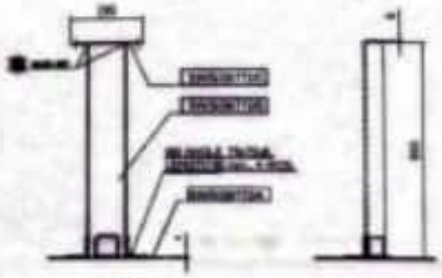

FRONT VIEW

SIDE VIEW

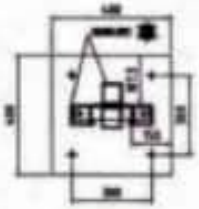

TOP VIEW

GUIDE TRAY POST

NOTE:
2. LIMITS OF DIMENSION SHALL BE AS PER IRS S.10 - 78 (LATEST).
1. ALL DIMENSIONS ARE IN MILLIMETRES.

PART NO.	DESCRIPTION	NO. REQ.
	JOINING PLATE-B	
	POST	
	BASE PLATE	

SIGNAL WORKSHOP / ER / HOWRAH.

SPEC :	IRS : S10
SCALE :	MILLIMETRES 10 0 10 20 DO NOT SCALE

NO OFF	DESCRIPTION	NO
04	SLIDING BOOM (RECTANGULAR SECTION) - LC GATE	
	FOR ASSEMBLY	

SLIDING BOOM (RECTANGULAR SECTION) - LC GATE - GUIDE TRAY POST

DRG. NO. SW / SA / 29 / 772

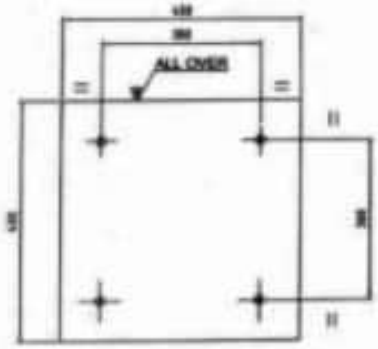

FRONT VIEW

TOP VIEW

NOTE:
2. LIMITS OF DIMENSION SHALL BE AS PER IRS S.10 - 78 (LATEST).
1. ALL DIMENSIONS ARE IN MILLIMETRES.

MATL. & SPEC.	STEEL IS : 2062 GRD. - S 10
MILLIMETRES	10 0 10 20 DO NOT SCALE

NO OFF	DESCRIPTION	NO
	GUIDE TRAY POST	
	FOR ASSEMBLY	

SIGNAL WORKSHOP / ER / HOWRAH.

GUIDE TRAY POST - BASE PLATE

DRG. NO. SW / S / 29 / 772 / A

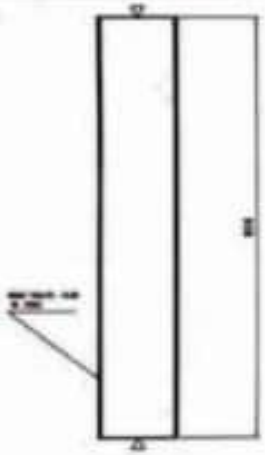

FRONT VIEW

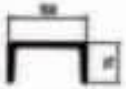

TOP VIEW

NOTE:
2. LIMITS OF DIMENSION SHALL BE AS PER IRS S.10 - 78 (LATEST).
1. ALL DIMENSIONS ARE IN MILLIMETRES.

MATL. & SPEC.	IRS : S10
MILLIMETRES	10 0 10 20 DO NOT SCALE

NO OFF	DESCRIPTION	NO
	GUIDE TRAY POST	
	FOR ASSEMBLY	

SIGNAL WORKSHOP / ER / HOWRAH.

GUIDE TRAY POST - POST

DRG. NO. SW / S / 29 / 772 / B

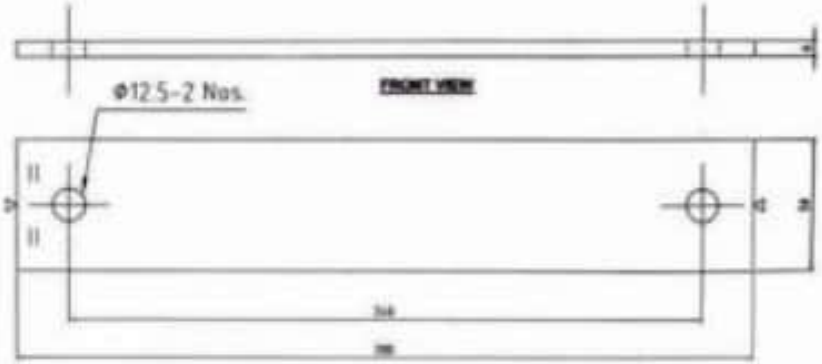

FRONT VIEW

TOP VIEW

NOTE:
2. LIMITS OF DIMENSION SHALL BE AS PER IRS S.10 - 78 (LATEST).
1. ALL DIMENSIONS ARE IN MILLIMETRES.

MATL. & SPEC.	STEEL IS : 2062 GRD. - S 10
MILLIMETRES	10 0 10 20 DO NOT SCALE

NO OFF	DESCRIPTION	NO
	GUIDE TRAY POST	
	FOR ASSEMBLY	

SIGNAL WORKSHOP / ER / HOWRAH.

GUIDE TRAY POST - JOINING PLATE-B

DRG. NO. SW / S / 29 / 772 / C

FILE OR ROUGH GROUND

MACHINE FINISH (ROUGH) UP 40 TO 80

MACHINE FINISH (MEDIUM) UP 16 TO 40

MACHINE FINISH (FINE) UP TO 16

GROUND

HARDEND GROUND

ROUGHNESS NUMBERS IN MICRONS

APPROVED	VERIFIED		CHECKED		DRAWN	SPEC :	IRS : S10	SIGNAL WORKSHOP / ER / HOWRAH.
(P.K.DAS)	(A.K.KUMAR)	(S.K.MAHATO)	(S.SINGH HAZRA)	(S.K.[illegible])	(S.K.DHAL)	SCALE :	MILLIMETRES 10 0 10 20 DO NOT SCALE	SLIDING BOOM (RECTANGULAR SECTION)) - LC GATE
DATE / PLS. / SAN	DWG / SIR / DRN	ASSEM / SUP / ASSEM	SUB / POS	SUB / MAP	SUB / DRG.			DRG. NO. SW / SA /29 / 798 SHEET 5 OF 21

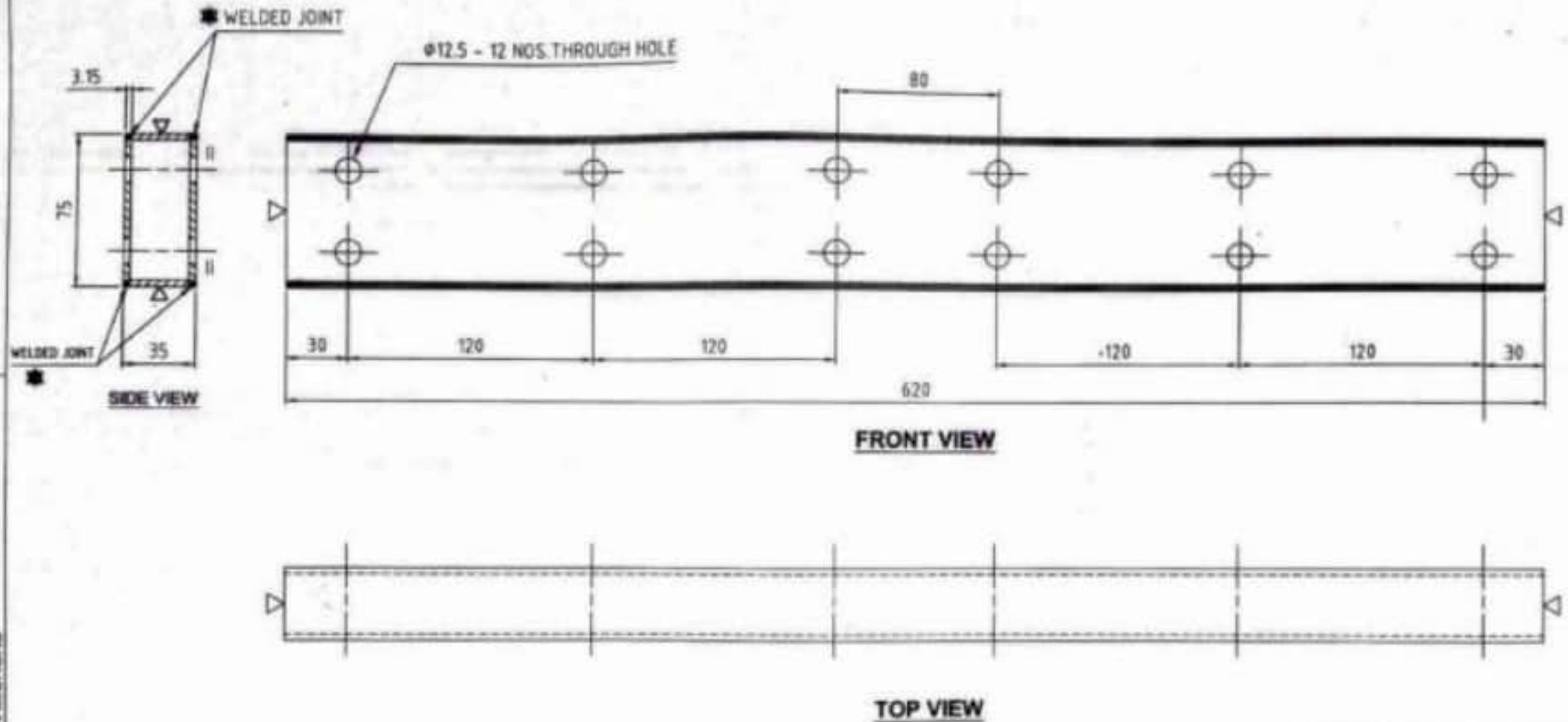

(05) BOOM JOINING INSERT

NOTE:
2. LIMITS OF DIMENSION SHALL BE AS PER IRS S :10 - 78 (LATEST).
1. ALL DIMENSIONS ARE IN MILLIMETRES.

01	SLIDING BOOM (RECTANGULAR SECTION) - LC GATE	SW/SA/29/768
NO OFF	DESCRIPTION	NO
	FOR ASSEMBLY	

MATL & SPEC.	STEEL IS : 2062 IRS : S 10	SIGNAL WORKSHOP / ER / HOWRAH.
MILLIMETRES 10 0 10 20 DO NOT SCALE		SLIDING BOOM (RECTANGULAR SECTION) - LC GATE - BOOM JOINING INSERT
		DRG. NO. SW/S/29/773

APPROVED	VERIFIED		CHECKED		DRAWN	SPEC :	IRS : S10	SIGNAL WORKSHOP / ER / HOWRAH.	
						SCALE :	MILLIMETRES 10 0 10 20 DO NOT SCALE	SLIDING BOOM (RECTANGULAR SECTION)) - LC GATE	
								DRG. NO. SW/SA/29/768	SHEET: 6 OF 21

FILE OR ROUGH GROUND > 80

MACHINE FINISH (ROUGH) UP 40 TO 80

MACHINE FINISH (MEDIUM) UP 16 TO 40

MACHINE FINISH (FINE) UP TO 16

GROUND

HARDEND GROUND

ROUGHNESS NUMBER IN MICRONS

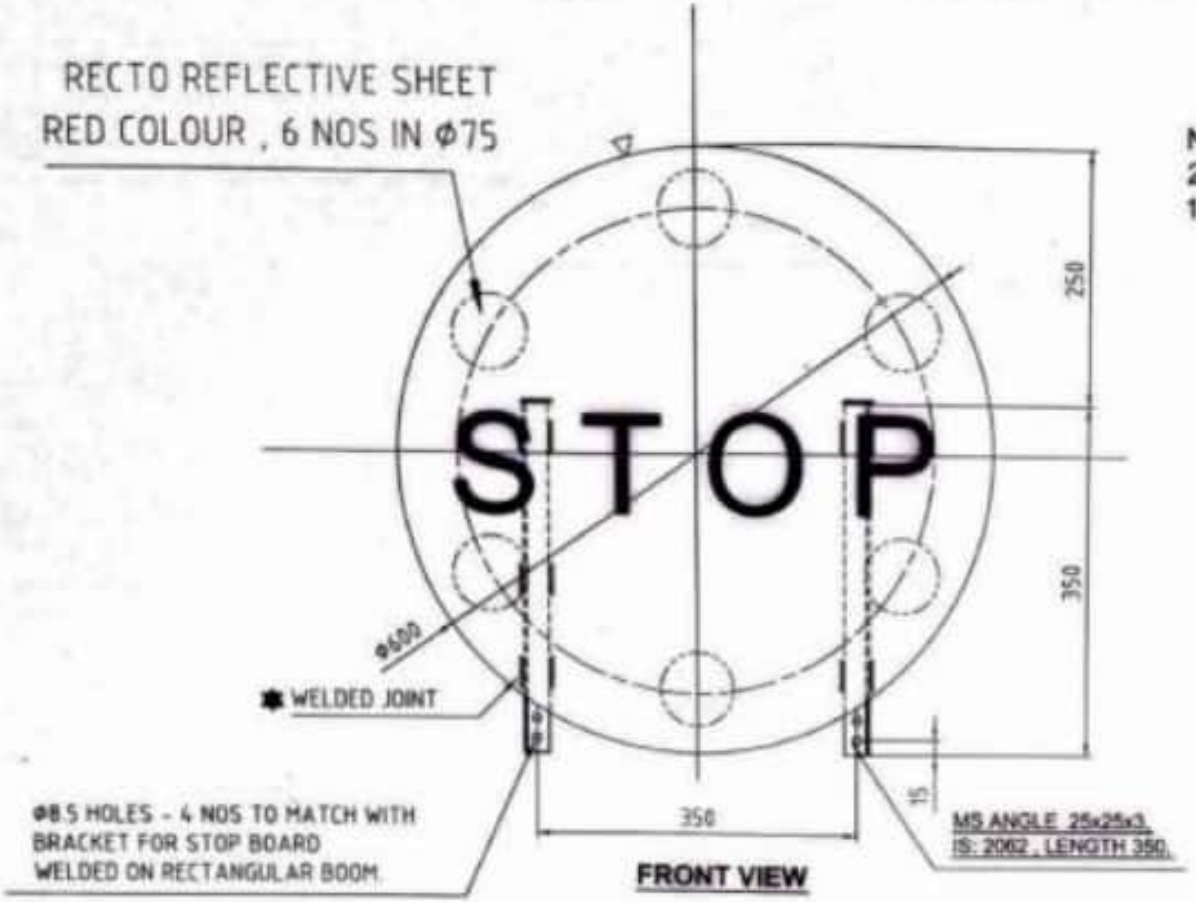

NOTE:
2. LIMITS OF DIMENSION SHALL BE AS PER IRS S :10 - 78 (LATEST).
1. ALL DIMENSIONS ARE IN MILLIMETRES.

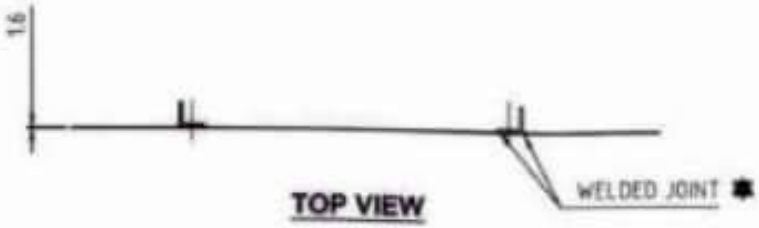

(06) STOP BOARD

01	SLIDING BOOM (RECTANGULAR SECTION) - LC GATE	SW/SA/29/768
NO OFF.	DESCRIPTION	NO REQD.
	FOR ASSEMBLY	

MATL & SPEC. STEEL IS : 2062 IRS : S 10

MILLIMETRES 10 0 10 20 DO NOT SCALE

SIGNAL WORKSHOP / ER / HOWRAH.

SLIDING BOOM (RECTANGULAR SECTION) - LC GATE - STOP BOARD.

DRG. NO. SW/S/29/774

APPROVED	VERIFIED		CHECKED		DRAWN	SPEC :	IRS : S10	SIGNAL WORKSHOP / ER / HOWRAH.	
						SCALE :	MILLIMETRES 10 0 10 20 DO NOT SCALE	SLIDING BOOM (RECTANGULAR SECTION)) - LC GATE	
								DRG. NO. SW / SA / 29 / 768	SHEET:7 OF 21

FILE OR ROUGH GROUND > 80

MACHINE FINISH (ROUGH) UP 40 TO 80

MACHINE FINISH (MEDIUM) UP 16 TO 40

MACHINE FINISH (FINE) UP TO 16

GROUND

HARDEND GROUND

ROUGHNESS NUMBER IN MICRONS

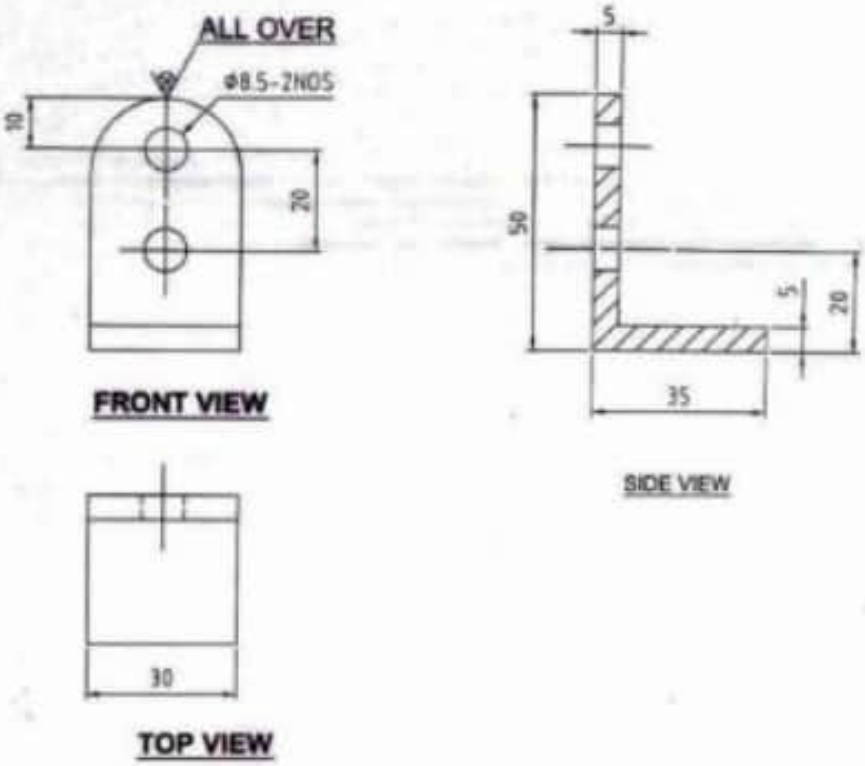

(07) BRACKET FOR STOP BOARD

NOTE:
3. BRACKET FOR STOP BOARD SHALL BE WELDED AROUND TO FIX ON RECTANGULAR BOOM.
2. LIMITS OF DIMENSION SHALL BE AS PER IRS S :10 - 78 (LATEST).
1. ALL DIMENSIONS ARE IN MILLIMETRES.

02	SLIDING BOOM (RECTANGULAR SECTION) - LC GATE	SW/SA/29/768
NO.OFF	DESCRIPTION	NO
	FOR ASSEMBLY	

MATL & SPEC.	STEEL IS : 2062 IRS : S 10
MILLIMETRES 10 0 10 20 DO NOT SCALE	

SIGNAL WORKSHOP / ER / HOWRAH.

SLIDING BOOM (RECTANGULAR SECTION) - LC GATE - BRACKET FOR STOP BOARD.

DRG. NO. SW / S / 29 / 775

FILE OR ROUGH GROUND Ra > 80
MACHINE FINISH (ROUGH) UP 40 TO 80
MACHINE FINISH (MEDIUM) UP 16 TO 40
MACHINE FINISH (FINE) UP TO 16
GROUND
HARDEND GROUND
ROUGHNESS NUMBER IN MICRONS

APPROVED	VERIFIED		CHECKED		DRAWN	SPEC :	IRS : S10	SIGNATURE
(P.K.DAS)	(K. KUMAR)	(B.K.MAHTO)	(S.SHISH HAZRA)	(S. MONDAL)	(B.K.BIKKA)	SCALE :	MILLIMETRES 10 0 10 20 DO NOT SCALE	SIGNAL WORKSHOP / ER / HOWRAH.
DATE / P.S. / 1006	DATE / SIGN / 1006	DATE / SIGN / 1006	DATE / POS	DATE / INSP.	DATE / DRG.			SLIDING BOOM (RECTANGULAR SECTION)) - LC GATE
								DRG. NO. SW / SA /29 / 768 — SHEET 8 OF 21

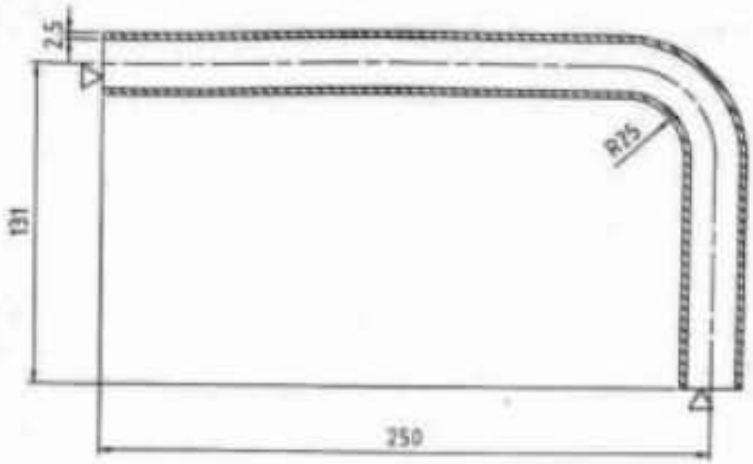

FRONT VIEW

SIDE VIEW

(08) BOOM HANDLE

NOTE:
4. HOT DIP ZINC COATING ON M.S. PIPE AS PER IS: 4736-1986.
3. BOOM HANDLE SHAL BE WELDED AROUND TO FIX ON RECTANGULAR BOOM.
2. LIMITS OF DIMENSION SHALL BE AS PER IRS S :10 - 78 (LATEST).
1. ALL DIMENSIONS ARE IN MILLIMETRES.

01	SLIDING BOOM (RECTANGULAR SECTION) - LC GATE	SW/SA/29/768
NO.OFF	DESCRIPTION	NO
	FOR ASSEMBLY	
	SIGNAL WORKSHOP / ER / HOWRAH.	

MATL & SPEC.	M.S. LIGHT TUBE IS : 1239 IRS : S 10
MILLIMETRES 10 0 10 20 DO NOT SCALE	SLIDING BOOM (RECTANGULAR SECTION) - LC GATE - BOOM HANDLE
	DRG. NO. SW / S / 29 / 776

APPROVED	VERIFIED		CHECKED		DRAWN	SPEC :	IRS : S10	SIGNAL WORKSHOP / ER / HOWRAH.	
(P.K.DAS)	(K.KUMAR)	(S.K.NANDY)	(S.DHIREN HAZRA)	(S.MUNDAL)	(S.K.DHAR)	SCALE :	MILLIMETRES 10 0 10 20 DO NOT SCALE	SLIDING BOOM (RECTANGULAR SECTION)) - LC GATE	
CMTE / PLG. / KKR	CWM / SW / HWH	AM(W) / SW / HWH	SSE / POD	SSE / WSP.	SSE / DRG.			DRG. NO. SW / SA / 29 / 768	SHEET: 9 OF 21

FILE OR ROUGH GROUND ▲ > 80

MACHINE FINISH (ROUGH) UP 40 TO 80

MACHINE FINISH (MEDIUM) UP 16 TO 40

MACHINE FINISH (FINE) UP TO 16

GROUND

HARDEND GROUND

● ROUGHNESS NUMBER IN MICRONS

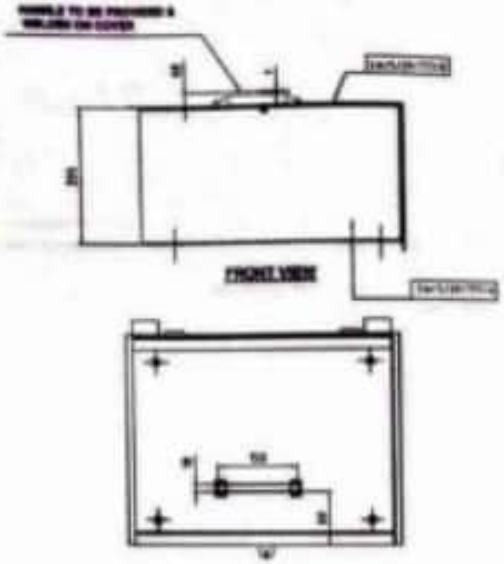

NOTE:
2. LIMITS OF DIMENSION SHALL BE AS PER IRS S : 10 - 78 (LATEST).
1. ALL DIMENSIONS ARE IN MILLIMETRES.

	COVER		
	CASE		
PART NO	DESCRIPTION	NO REQD	

SIGNAL WORKSHOP / ER / HOWRAH.

SLIDING BOOM (RECTANGULAR SECTION) - LC GATE - PROTECTION BOX

DRG. NO. SW / SA / 29 / 777

SPEC :	IRS : S10		
SCALE :	MILLIMETRES 10 0 10 20 DO NOT SCALE	NO REQD	DESCRIPTION / FOR ASSEMBLY

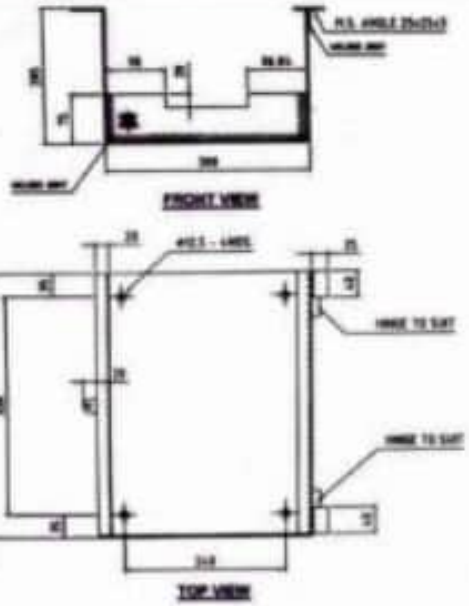

NOTE:
2. LIMITS OF DIMENSION SHALL BE AS PER IRS S : 10 - 78 (LATEST).
1. ALL DIMENSIONS ARE IN MILLIMETRES.

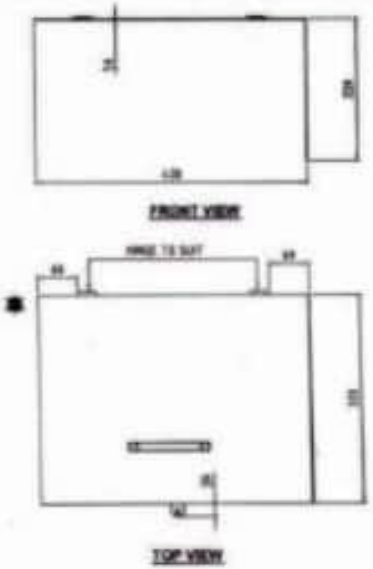

NOTE:
2. LIMITS OF DIMENSION SHALL BE AS PER IRS S : 10 - 78 (LATEST).
1. ALL DIMENSIONS ARE IN MILLIMETRES.

	PROTECTION BOX	SW / SA / 29 / 777
	DESCRIPTION	NO
	FOR ASSEMBLY	
MAT'L & SPEC.	STEEL IS : 2062 IRS : S 10	SIGNAL WORKSHOP / ER / HOWRAH.
	MILLIMETRES 10 0 10 20 DO NOT SCALE	PROTECTION BOX - CASE
		DRG. NO. SW / S / 29 / 777 / A

	PROTECTION BOX	SW / SA / 29 / 777
	DESCRIPTION	NO
	FOR ASSEMBLY	
MAT'L & SPEC.	STEEL IS : 2062 IRS : S 10	SIGNAL WORKSHOP / ER / HOWRAH.
	MILLIMETRES 10 0 10 20 DO NOT SCALE	PROTECTION BOX-COVER
		DRG. NO. SW / S / 29 / 777 / B

APPROVED	VERIFIED		CHECKED		DRAWN	SPEC :	IRS : S10	SIGNAL WORKSHOP / ER / HOWRAH.
(P.K.JAIN)	(V. KUMAR)	(B.K.BANERJI)	(B.SUDHIR NAIDU)	(S. MONDAL)	(S.K.SAHA)	SCALE :	MILLIMETRES 10 0 10 20 DO NOT SCALE	SLIDING BOOM (RECTANGULAR SECTION)) - LC GATE
DATE / PLS. / 1001	CONS / SW / SWM	AGENT / SW / 1000	SSE / PCO	SSE / SWP.	SSE / DPM.			DRG. NO. SW / SA / 29 / 788 SHEET 10 OF 21

FILE OR ROUGH GROUND ▲ > 80

MACHINE FINISH (ROUGH) CP 40 TO 80

MACHINE FINISH (MEDIUM) CP 16 TO 40

MACHINE FINISH (FINE) CP TO 16

GROUND

HARDEND GROUND

ROUGHNESS NUMBER IN MICRONS

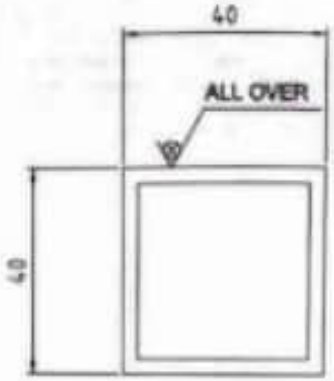

FRONT VIEW

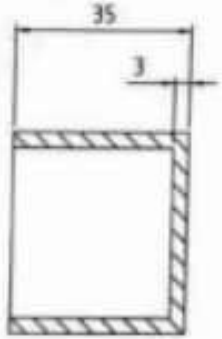

SIDE VIEW

TOP VIEW

(10) BOOM LOCK PIECE

NOTE:
3. BOOM LOCK PIECE SHALL BE WELDED AROUND TO FIX ON RECTANGULAR BOOM.
2. LIMITS OF DIMENSION SHALL BE AS PER IRS S :10 - 78 (LATEST).
1. ALL DIMENSIONS ARE IN MILLIMETRES.

01	SLIDING BOOM (RECTANGULAR SECTION) - LC GATE	SW/SA/29/768
NO. OFF	DESCRIPTION	NO
	FOR ASSEMBLY	

MATL & SPEC.	STEEL IS : 2062 IRS : S 10
MILLIMETRES 10 0 10 20 DO NOT SCALE	

SIGNAL WORKSHOP / ER / HOWRAH.

SLIDING BOOM (RECTANGULAR SECTION) - LC GATE - BOOM LOCK PIECE.

DRG. NO. SW / S / 29 / 778

APPROVED	VERIFIED		CHECKED		DRAWN	SPEC :	IRS : S10	SIGNAL WORKSHOP / ER / HOWRAH.	
(P.K.DAS)	(H. KUMAR)	(S.K.KANDY)	(S.BHUSHAN HAZRA)	(S. MONDAL)	(S.K.SIKKA)	SCALE :	MILLIMETRES 10 0 10 20 DO NOT SCALE	SLIDING BOOM (RECTANGULAR SECTION)) - LC GATE	
CATE / PLS / KKK	CMM / SW / HWH	ADEEN / SW / HWH	SSE / PCO	SSE / MSP	SSE / DRG			DRG. NO. SW / SA / 29 / 768	SHEET:11 OF 21

FILE OR ROUGH GROUND > 80

MACHINE FINISH (ROUGH) UP 40 TO 80

MACHINE FINISH (MEDIUM) UP 16 TO 40

MACHINE FINISH (FINE) UP TO 16

GROUND

HARDEND GROUND

ROUGHNESS NUMBER IN MICRONS

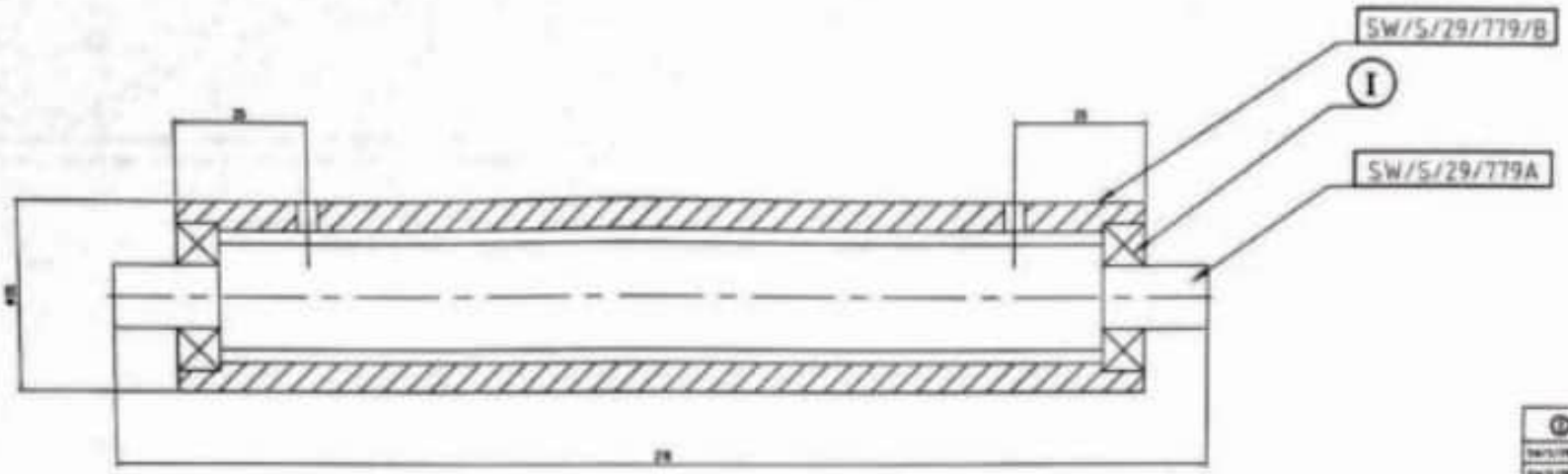

NOTE:
4. FRONT ROLLER SHALL BE WELDED AROUND TO FIX ON GUIDE TRAY.
3. SINCE, SKF BALL BEARING NO.6001 Z (2 NOS) ARE BEING USED FOR MANUFACTURING PROTOTYPE SLIDING BOOM (RECTANGULAR SECTION) - LC GATE.
2. LIMITS OF DIMENSION SHALL BE AS PER IRS S :10 - 76 (LATEST).
1. ALL DIMENSIONS ARE IN MILLIMETRES.

SECTIONAL FRONT VIEW

(I) FRONT ROLLER

(I)	BEARING (SKF 6001 Z) OR SIMILAR		02
SW/S/29/779/B	HOUSING		01
SW/S/29/779/A	SHAFT		01
PART NO	DESCRIPTION		NO. REQD

SIGNAL WORKSHOP / ER / HOWRAH.

SLIDING BOOM (RECTANGULAR SECTION) - LC GATE - FRONT ROLLER

DRG. NO.SW/SA/29/779

SPEC :	IRS : S10	01	SLIDING BOOM (RECTANGULAR SECTION) - LC GATE	DIMENSION
SCALE :	MILLIMETRES 10 0 10 20 DO NOT SCALE	NO. OFF	DESCRIPTION / FOR ASSEMBLY	NO. OFF

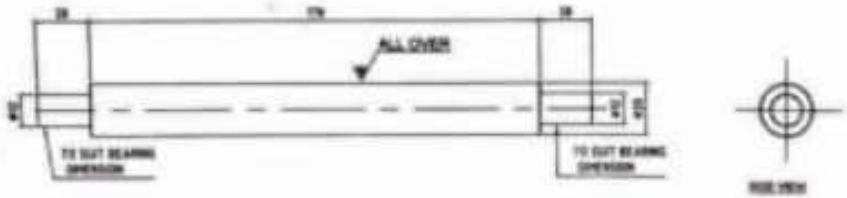

FRONT VIEW

SIDE VIEW

NOTE:
2. LIMITS OF DIMENSION SHALL BE AS PER IRS S :10 - 76 (LATEST).
1. ALL DIMENSIONS ARE IN MILLIMETRES.

01	FRONT ROLLER	SW/SA/29/779
NO. OFF	DESCRIPTION	NO.
	FOR ASSEMBLY	
MAT'L & SPEC.	SPEC. IS : 2062 GRD. E 10	SIGNAL WORKSHOP / ER / HOWRAH
MILLIMETRES 10 0 10 20 DO NOT SCALE		FRONT ROLLER SHAFT
		DRG. NO. SW / S / 29 / 779 / A

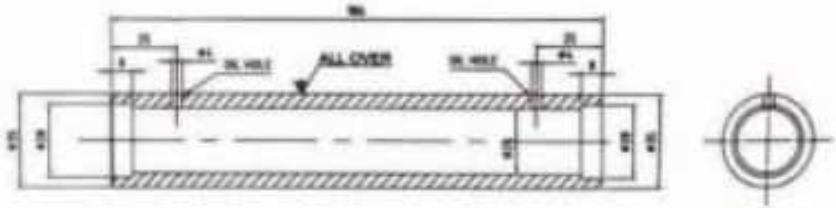

SECTIONAL FRONT VIEW

SIDE VIEW

NOTE:
2. LIMITS OF DIMENSION SHALL BE AS PER IRS S :10 - 76 (LATEST).
1. ALL DIMENSIONS ARE IN MILLIMETRES.

01	FRONT ROLLER	SW/SA/29/779
NO. OFF	DESCRIPTION	NO.
	FOR ASSEMBLY	
MAT'L & SPEC.	SPEC. IS : 2062 GRD. E 10	SIGNAL WORKSHOP / ER / HOWRAH
MILLIMETRES 10 0 10 20 DO NOT SCALE		FRONT ROLLER - HOUSING
		DRG. NO. SW / S / 29 / 779 / B

APPROVED	VERIFIED		CHECKED		DRAWN	SPEC : IRS : S10	SIGNAL WORKSHOP / ER / HOWRAH.
(P.K.DAS)	(S. KUMAR)	(K.K.SAHA)	(B.JANARDAN NAIDU)	(S. MORAL)	(S.K.DAS)	SCALE : MILLIMETRES 10 0 10 20 DO NOT SCALE	SLIDING BOOM (RECTANGULAR SECTION)) - LC GATE
GATE / PLG. / WSK	CWM / S.K / WSK	ADMIN / SW / WSK	SSE / PCD	SSE / MMT	SSE / DRG.		DRG. NO. SW/SA/29/779B — SHEET 12 OF 01

FILE OR ROUGH GROUND ▲ > 60

MACHINE FINISH (ROUGH) UP 40 TO 60

MACHINE FINISH (MEDIUM) UP 16 TO 40

MACHINE FINISH (FINE) UP TO 16

GROUND

HARDEND GROUND

● ROUGHNESS NUMBER IN MICRONS

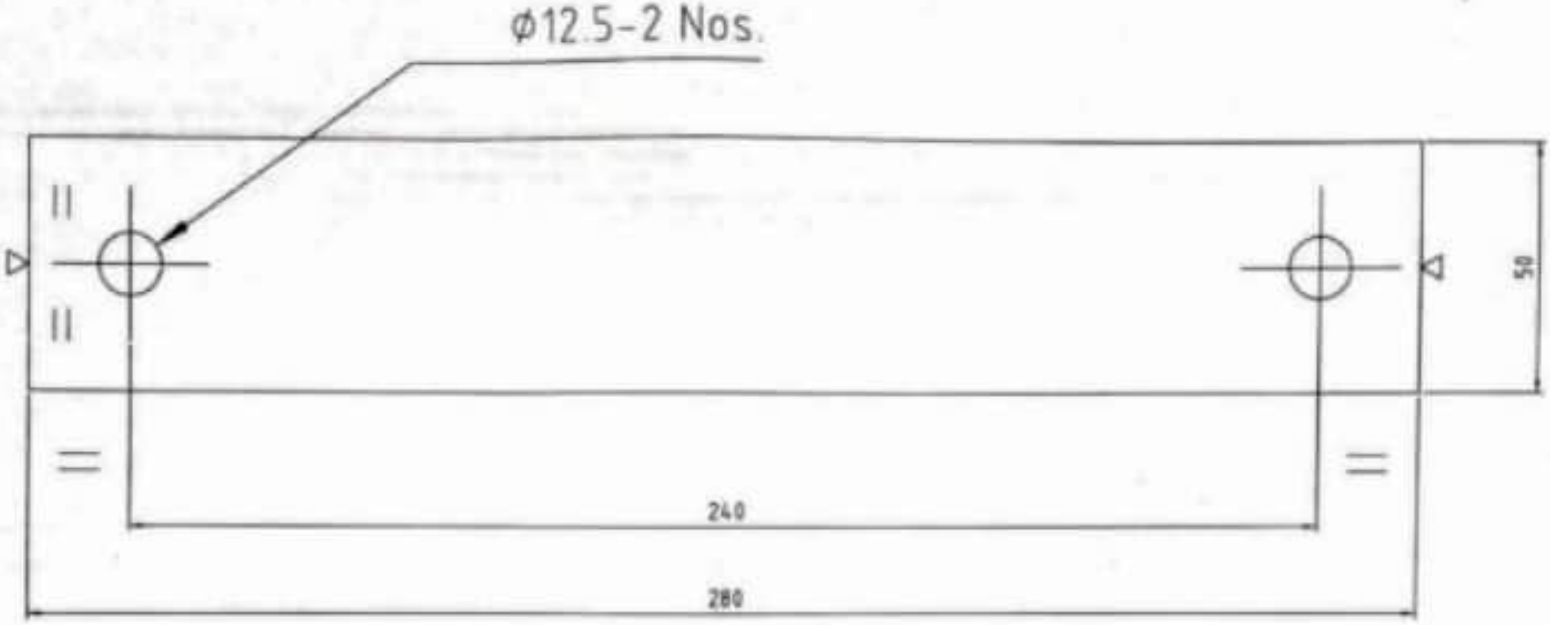

FRONT VIEW

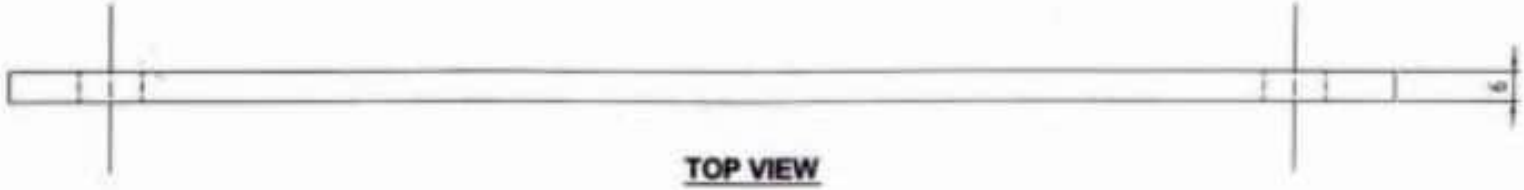

TOP VIEW

⑫ JOINING PLATE -'A'

NOTE:
3. JOINING PLATE - 'A' SHALL BE WELDED AROUND TO FIX ON GUIDE TRAY.
2. LIMITS OF DIMENSION SHALL BE AS PER IRS S :10 - 78 (LATEST).
1. ALL DIMENSIONS ARE IN MILLIMETRES.

DE	SLIDING BOOM (RECTANGULAR SECTION) - LC GATE	SW/SA/29/768
NO. OFF	DESCRIPTION	NO
	FOR ASSEMBLY	

MATL & SPEC.	STEEL IS : 2062 IRS : S 10	SIGNAL WORKSHOP / ER / HOWRAH.
MILLIMETRES 10 0 10 20 DO NOT SCALE		SLIDING BOOM (RECTANGULAR SECTION) - LC GATE - JOINING PLATE -A.
		DRG. NO. SW / S / 29 / 780

APPROVED	VERIFIED		CHECKED		DRAWN	SPEC :	IRS : S10	SIGNAL WORKSHOP / ER / HOWRAH.	
(P.KUMAR)	(N.KUMAR)	(B.K.ANAND)	(B.BHOSH HAZRA)	(S.MONDAL)	(B.R.SIVA)	SCALE :	MILLIMETRES 10 0 10 20 DO NOT SCALE	SLIDING BOOM (RECTANGULAR SECTION)) - LC GATE	
DATE / PLG. / KKR	CORM / BR / HWH	AMEN / BR / HWH	SSE / PCO	SSE / MSP.	SSE / DRG.			DRG. NO. SW/SA/29/768	SHEET:13 OF 21

FILE OR ROUGH GROUND Ra > 80

MACHINE FINISH (ROUGH) UP 40 TO 80

MACHINE FINISH (MEDIUM) UP 16 TO 40

MACHINE FINISH (FINE) UP TO 16

GROUND

HARDEND GROUND

ROUGHNESS NUMBER IN MICRONS

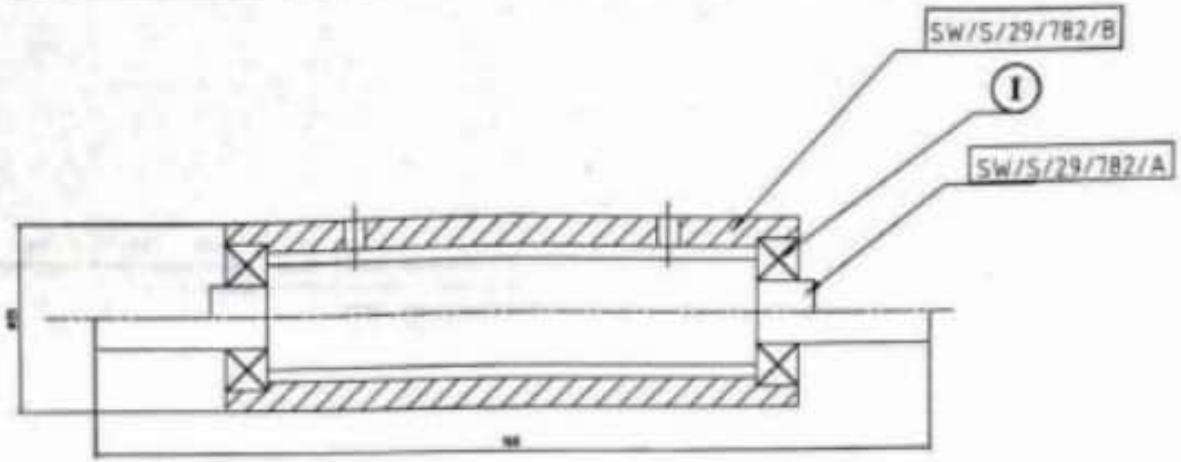

SECTIONAL FRONT VIEW

(I) IDLER ROLLER

NOTE:
4. IDLER ROLLER SHALL BE WELDED AROUND TO FIX ON GUIDE TRAY.
3. SINCE, SKF BALL BEARING NO.6001 Z (4 NOS) ARE BEING USED FOR MANUFACTURING PROTOTYPE SLIDING BOOM (RECTANGULAR SECTION) - LC GATE,
2. LIMITS OF DIMENSION SHALL BE AS PER IRS S : 10 - 78 (LATEST).
1. ALL DIMENSIONS ARE IN MILLIMETRES.

(I)	BEARING (SKF 6001 Z) (4 SMALLER)	4
[illegible]	HOUSING	01
[illegible]	SHAFT	01
PART NO	DESCRIPTION	NO. REQD.

SIGNAL WORKSHOP / ER / HOWRAH.

SLIDING BOOM (RECTANGULAR SECTION) - LC GATE - IDLER ROLLER

DRG. NO.SW/SA/29/781

SPEC :	IRS : S10		
SCALE :	MILLIMETRES 10 0 10 20 DO NOT SCALE	NO	SLIDING BOOM (RECTANGULAR SECTION) - LC GATE
		NO OFF	DESCRIPTION / FOR ASSEMBLY

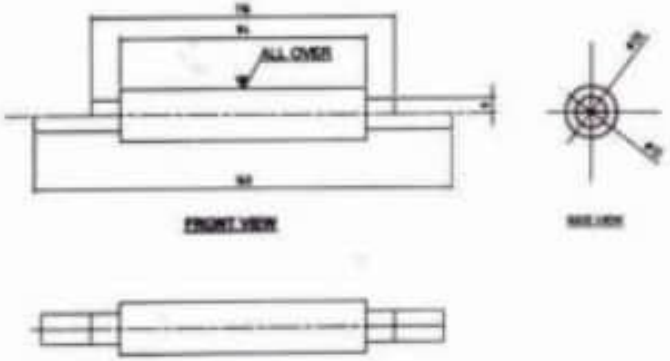

FRONT VIEW

SIDE VIEW

TOP VIEW

NOTE:
2. LIMITS OF DIMENSION SHALL BE AS PER IRS S : 10 - 78 (LATEST).
1. ALL DIMENSIONS ARE IN MILLIMETRES.

(I)	IDLER ROLLER	SW/SA/29/781
NO OFF	DESCRIPTION / FOR ASSEMBLY	NO
MATL & SPEC	STEEL IS : 2062 GRD. E 350	SIGNAL WORKSHOP / ER / HOWRAH.
	MILLIMETRES 10 0 10 20 DO NOT SCALE	IDLER ROLLER-SHAFT
		DRG. NO. SW / S / 29 / 781 / A

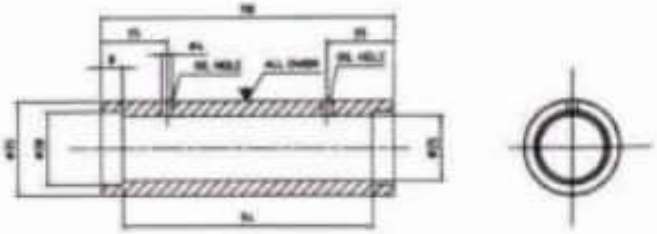

SECTIONAL FRONT VIEW

SIDE VIEW

NOTE:
2. LIMITS OF DIMENSION SHALL BE AS PER IRS S : 10 - 78 (LATEST).
1. ALL DIMENSIONS ARE IN MILLIMETRES.

(I)	IDLER ROLLER	SW/SA/29/781
NO OFF	DESCRIPTION / FOR ASSEMBLY	NO
MATL & SPEC	STEEL IS : 2062 GRD. E 350	SIGNAL WORKSHOP / ER / HOWRAH.
	MILLIMETRES 10 0 10 20 DO NOT SCALE	IDLER ROLLER-HOUSING
		DRG. NO. SW / S / 29 / 781 / B

APPROVED	VERIFIED		CHECKED		DRAWN	SPEC :	IRS : S10	SIGNAL WORKSHOP / ER / HOWRAH.
(P.KUMAR)	(S.KUMAR)	(B.K.SAHOO)	(S.BIKASH HAZRA)	(S.MONDAL)	(S.BARAN)	SCALE :	MILLIMETRES 10 0 10 20 DO NOT SCALE	SLIDING BOOM (RECTANGULAR SECTION)) - LC GATE
DATE / PLUS / XXX	[illegible]	[illegible]	[illegible]	[illegible]	[illegible]			DRG. NO. SW/SA/29/758 — SHEET 14 OF 21

FILE OR ROUGH GROUND UP > 80

MACHINE FINISH (ROUGH) UP 40 TO 80

MACHINE FINISH (MEDIUM) UP 10 TO 40

MACHINE FINISH (FINE) UP TO 10

GROUND

HARDEND GROUND

ROUGHNESS NUMBER IN MICRONS

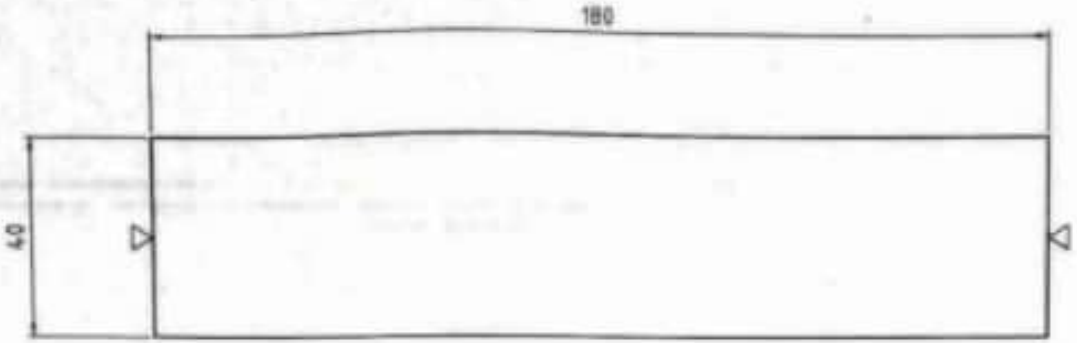

FRONT VIEW

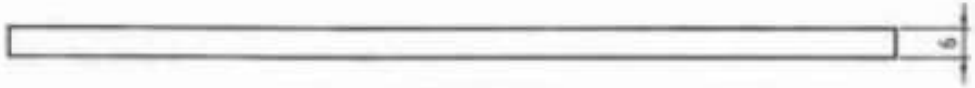

TOP VIEW

(14) SUPPORT PLATE FOR GUIDE TRAY

NOTE:
3. SUPPORT PLATE FOR GUIDE TRAY SHALL BE WELDED AROUND TO FIX ON GUIDE TRAY.
2. LIMITS OF DIMENSION SHALL BE AS PER IRS S :10 - 78 (LATEST).
1. ALL DIMENSIONS ARE IN MILLIMETRES.

FILE OR ROUGH GROUND ▲ > 80
MACHINE FINISH (ROUGH) UP 40 TO 80
MACHINE FINISH (MEDIUM) UP 16 TO 40
MACHINE FINISH (FINE) UP TO 16
GROUND
HARDEND GROUND
● ROUGHNESS NUMBER IN MICRONS

11	SLIDING BOOM (RECTANGULAR SECTION) - LC GATE	SW/SA/29/768
NO. OFF	DESCRIPTION	NO
	FOR ASSEMBLY	

MATL & SPEC.	STEEL IS : 2062 IRS : S 10	SIGNAL WORKSHOP / ER / HOWRAH.
MILLIMETRES 10 0 10 20 DO NOT SCALE		SLIDING BOOM (RECTANGULAR SECTION) - LC GATE - SUPPORT PLATE FOR GUIDE TRAY
		DRG. NO. SW / S / 29 / 782

APPROVED	VERIFIED		CHECKED		DRAWN	SPEC :	IRS : S10	SIGNAL WORKSHOP / ER / HOWRAH.	
						SCALE :	MILLIMETRES 10 0 10 20 DO NOT SCALE	SLIDING BOOM (RECTANGULAR SECTION)) - LC GATE	
								DRG. NO. SW / SA /29 / 768	SHEET:15 OF 21

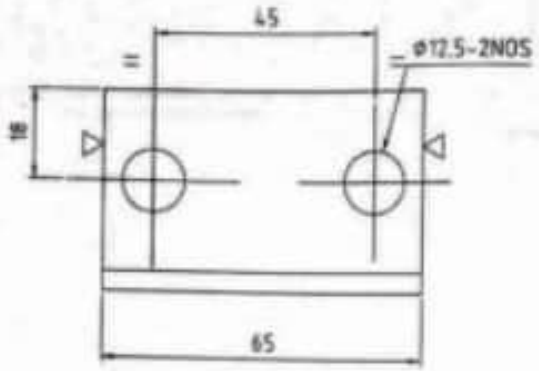

FRONT VIEW

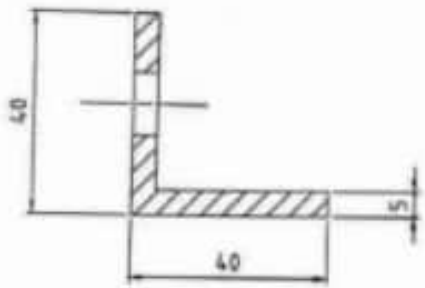

SIDE VIEW

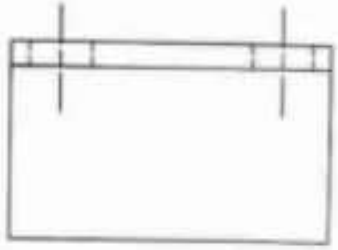

TOP VIEW

(15) JOINING BRACKET BIG

NOTE:
3. JOINING BRACKET BIG SHALL BE WELDED AROUND TO FIX ON GUIDE TRAY.
2. LIMITS OF DIMENSION SHALL BE AS PER IRS S :10 - 78 (LATEST).
1. ALL DIMENSIONS ARE IN MILLIMETRES.

FILE OR ROUGH GROUND ▲ > 80
MACHINE FINISH (ROUGH) UP 40 TO 80
MACHINE FINISH (MEDIUM) UP 16 TO 40
MACHINE FINISH (FINE) UP TO 16
GROUND
HARDEND GROUND
▲ ROUGHNESS NUMBER IN MICRONS

04	SLIDING BOOM (RECTANGULAR SECTION) - LC GATE	SW/SA/29/768
NO. OFF	DESCRIPTION	NO
	FOR ASSEMBLY	

MATL & SPEC.	STEEL IS : 2062 IRS : S 10	SIGNAL WORKSHOP / ER / HOWRAH.
MILLIMETRES 10 0 10 20 DO NOT SCALE		SLIDING BOOM (RECTANGULAR SECTION) - LC GATE - JOINING BRACKET BIG
		DRG. NO. SW / S / 29 / 783

APPROVED	VERIFIED		CHECKED		DRAWN	SPEC :	IRS : S10	SIGNAL WORKSHOP / ER / HOWRAH.	
(P.K.DAS)	(H. KUMAR)	(S.K.NANDY)	(S.SIKDISH HAZRA)	(S. MONDAL)	(S.K.DIKKA)	SCALE :	MILLIMETRES 10 0 10 20 DO NOT SCALE	SLIDING BOOM (RECTANGULAR SECTION)) - LC GATE	
CRTE / PLG. / KGK	CHM / SW / HWH	AMEW / SW / HWH	SSE / PCD	SSE / WSP.	SSE / DRG.			DRG. NO. SW / SA /29 / 768	SHEET:16 OF 21

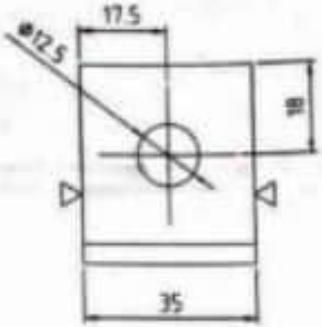

FRONT VIEW

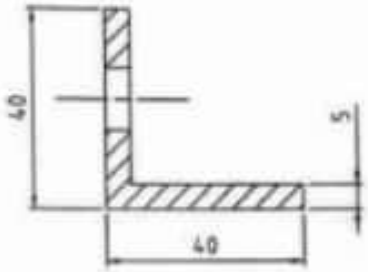

SIDE VIEW

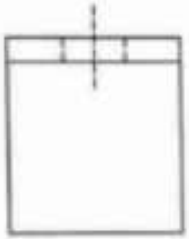

TOP VIEW

(16) JOINING BRACKET SMALL

08	SLIDING BOOM (RECTANGULAR SECTION) - LC GATE	SW/SA/29/768
NO. OFF	DESCRIPTION	NO
	FOR ASSEMBLY	
	SIGNAL WORKSHOP / ER / HOWRAH.	

NOTE:
3. JOINING BRACKET SHALL BE WELDED AROUND TO FIX ON GUIDE TRAY.
2. LIMITS OF DIMENSION SHALL BE AS PER IRS S :10 - 78 (LATEST).
1. ALL DIMENSIONS ARE IN MILLIMETRES.

MATL & SPEC.	STEEL IS : 2062 IRS : S 10	SLIDING BOOM (RECTANGULAR SECTION) - LC GATE - JOINING BRACKET SMALL.
MILLIMETRES 10 0 10 20 DO NOT SCALE		DRG. NO. SW / S / 29 / 784

APPROVED	VERIFIED		CHECKED		DRAWN	SPEC :	IRS : S10	SIGNAL WORKSHOP / ER / HOWRAH.	
						SCALE :	MILLIMETRES 10 0 10 20 DO NOT SCALE	SLIDING BOOM (RECTANGULAR SECTION)) - LC GATE	
								DRG. NO. SW / SA /29 / 768	SHEET:17 OF 21

FILE OR ROUGH GROUND
MACHINE FINISH (ROUGH) UP 40 TO 80
MACHINE FINISH (MEDIUM) UP 16 TO 40
MACHINE FINISH (FINE) UP TO 16
GROUND
HARDEND GROUND
ROUGHNESS NUMBER IN MICRONS

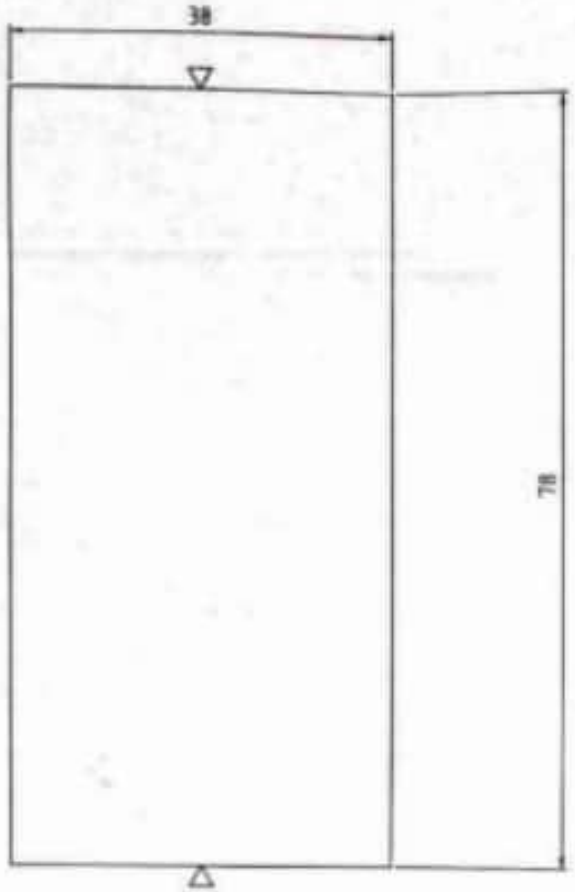

FRONT VIEW

TOP VIEW

(17) BOOM END PLATE

NOTE:
3. BOM END PLATE SHALL BE WELDED AROUND TO FIX ON RECTANGULAR BOOM.
2. LIMITS OF DIMENSION SHALL BE AS PER IRS S :10 - 78 (LATEST).
1. ALL DIMENSIONS ARE IN MILLIMETRES.

02	SLIDING BOOM (RECTANGULAR SECTION) - LC GATE	SW/SA/29/768
NO. OFF	* DESCRIPTION	NO
	FOR ASSEMBLY	

MATL & SPEC.	STEEL IS : 2062 IRS : S 10	SIGNAL WORKSHOP / ER / HOWRAH.
MILLIMETRES 10 0 10 20 DO NOT SCALE		SLIDING BOOM (RECTANGULAR SECTION) - LC GATE - BOOM END PLATE.
		DRG. NO. SW / S / 29 / 785

APPROVED	VERIFIED		CHECKED		DRAWN	SPEC :	IRS : S10	SIGNAL WORKSHOP / ER / HOWRAH.	
(P.K.DAS)	(H. KUMAR)	(S.K.MAHTY)	(S.GHOSH HAZRA)	(S. MODAL)	(S.K.DIKSA)	SCALE :	MILLIMETRES 10 0 10 20 DO NOT SCALE	SLIDING BOOM (RECTANGULAR SECTION)) - LC GATE	
DATE / PLG. / KKK	CHM / SW / HWH	AM/SW / SW / HWH	SSE / PCD	SSE / MMP	SSE / DRG.			DRG. NO. SW / SA /29 / 768	SHEET:18 OF 21

FILE OR ROUGH GROUND ✱ > 80

MACHINE FINISH (ROUGH) UP 40 TO 80

MACHINE FINISH (MEDIUM) UP 16 TO 40

MACHINE FINISH (FINE) UP TO 16

GROUND

HARDEND GROUND

✱ ROUGHNESS NUMBER IN MICRONS

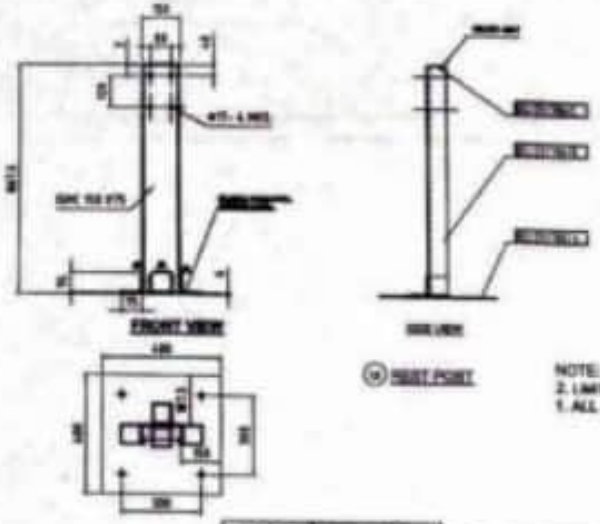

NOTE:
2. LIMITS OF DIMENSION SHALL BE AS PER IRS S-10 - 79 (LATEST).
1. ALL DIMENSIONS ARE IN MILLIMETRES.

	HAT PIECE	
	POST	
	BASE PLATE	
PART NO.	DESCRIPTION	NO. REQD.

SIGNAL WORKSHOP / ER / HOWRAH.

01		
NO. OFF	FOR ASSEMBLY	NO

SPEC: IRS : S10

SCALE: MILLIMETRES 10 0 10 20 DO NOT SCALE

SLIDING BOOM (RECTANGULAR SECTION) - LC GATE - REST POST

DRG. NO. SW / SA / 29 / 798

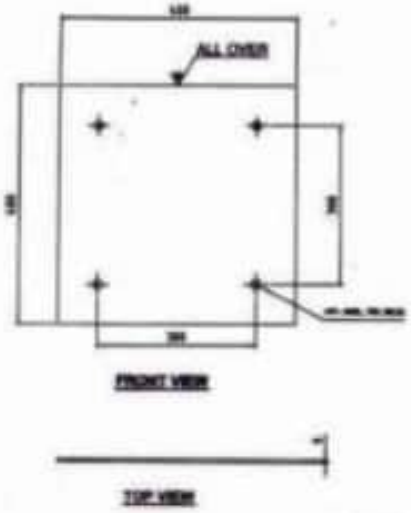

NOTE:
2. LIMITS OF DIMENSION SHALL BE AS PER IRS S-10 - 79 (LATEST).
1. ALL DIMENSIONS ARE IN MILLIMETRES.

01	REST POST	
NO. OFF	DESCRIPTION	NO.
	FOR ASSEMBLY	

MATL & SPEC: STEEL

SIGNAL WORKSHOP / ER / HOWRAH.

REST POST - BASE PLATE

DRG. NO. SW / S / 29 / 798 / A

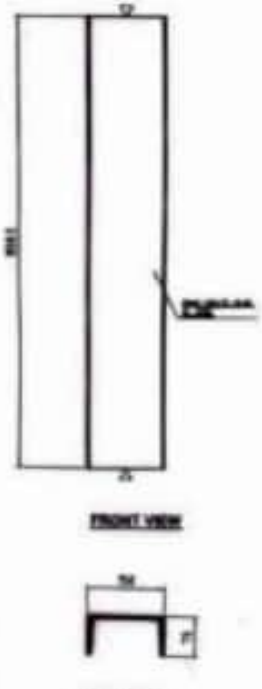

NOTE:
2. LIMITS OF DIMENSION SHALL BE AS PER IRS S-10 - 79 (LATEST).
1. ALL DIMENSIONS ARE IN MILLIMETRES.

01	REST POST	
NO. OFF	DESCRIPTION	NO.
	FOR ASSEMBLY	

MATL & SPEC: STEEL

SIGNAL WORKSHOP / ER / HOWRAH.

SCALE: MILLIMETRES 10 0 10 20 DO NOT SCALE

REST POST - POST

DRG. NO. SW / S / 29 / 798 / B

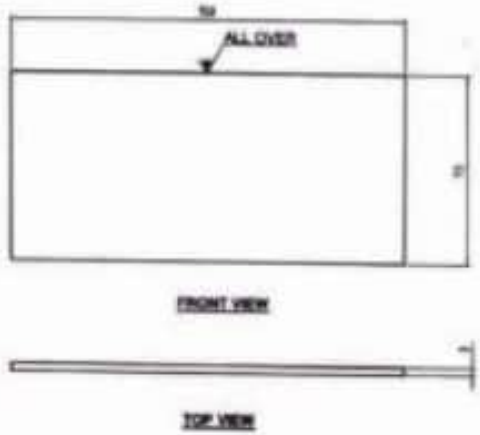

NOTE:
2. LIMITS OF DIMENSION SHALL BE AS PER IRS S-10 - 79 (LATEST).
1. ALL DIMENSIONS ARE IN MILLIMETRES.

01	REST POST	
NO. OFF	DESCRIPTION	NO.
	FOR ASSEMBLY	

MATL & SPEC: STEEL

SIGNAL WORKSHOP / ER / HOWRAH.

REST POST-TOP PIECE

DRG. NO. SW / S / 29 / 798 / C

APPROVED	VERIFIED		CHECKED		DRAWN	SPEC: IRS : S10	SIGNAL WORKSHOP / ER / HOWRAH.
(P.K.DAS)	(S. KUMAR)	(S.K.ANAND)	(SUBHASH YADAV)	(S. MUNDAL)	(S.K.DAS)	SCALE: MILLIMETRES 10 0 10 20 DO NOT SCALE	SLIDING BOOM (RECTANGULAR SECTION)) - LC GATE
DATE / PLAN / KKR	CORR / SIR / SRM	RMRM / SW / SRM	SAC / PCO	SSE / MAP	SSE / DRG		DRG. NO. SW/SA/29/798 SHEET 10 OF 21

FILE OR ROUGH GROUND ▲ > 80

MACHINE FINISH (ROUGH) UP 40 TO 80

MACHINE FINISH (MEDIUM) UP 16 TO 40

MACHINE FINISH (FINE) UP TO 16

GROUND

HARDEND GROUND

▲ ROUGHNESS NUMBER IN MICRONS

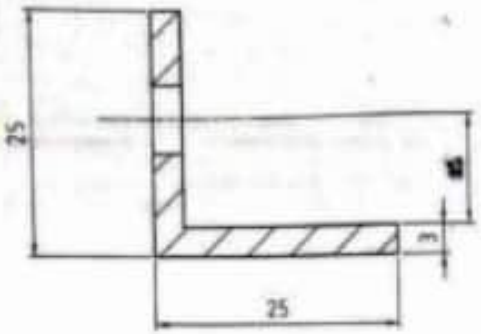

FRONT VIEW

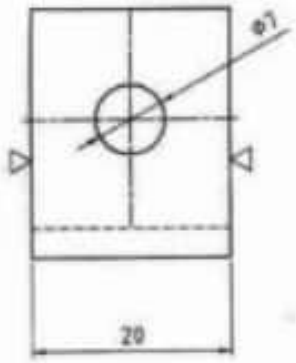

SIDE VIEW

TOP VIEW

(19) BRACKET FOR CHAIN

NOTE:
3. BRACKET FOR CHAIN SHALL BE WELDED AROUND TO FIX ON RECTANGULAR BOOM.
2. LIMITS OF DIMENSION SHALL BE AS PER IRS S :10 - 78 (LATEST).
1. ALL DIMENSIONS ARE IN MILLIMETRES.

NO. OFF	DESCRIPTION	NO
01	SLIDING BOOM (RECTANGULAR SECTION) - LC GATE	SW/SA/29/768
	FOR ASSEMBLY	

MATL & SPEC.	STEEL IS : 2062 IRS : S 10	SIGNAL WORKSHOP / ER / HOWRAH.
MILLIMETRES 10 0 10 20 DO NOT SCALE		SLIDING BOOM (RECTANGULAR SECTION) - LC GATE - BRACKET FOR CHAIN
		DRG. NO. SW / S / 29 / 787

APPROVED	VERIFIED		CHECKED		DRAWN	SPEC :	IRS : S10	SIGNAL WORKSHOP / ER / HOWRAH.	
(P.K.DAS)	(T. KUMAR)	(S.K.KANETI)	(S.SANDIP HAZRA)	(S. MONDAL)	(S.K.DAS)	SCALE :	MILLIMETRES 10 0 10 20 DO NOT SCALE	SLIDING BOOM (RECTANGULAR SECTION)) - LC GATE	
DATE / PLS / [illegible]	CWM / SW / [illegible]	ASSM / SW / [illegible]	SSE / POD	SSE / [illegible]	SSE / DRG.			DRG. NO. SW/SA/29/768	SHEET 20 OF 21

FILE OR ROUGH GROUND ▲ > 80

MACHINE FINISH (ROUGH) UP 40 TO 80

MACHINE FINISH (MEDIUM) UP 16 TO 40

MACHINE FINISH (FINE) UP TO 16

GROUND

HARDEND GROUND

● ROUGHNESS NUMBER IN MICRONS

S&T Drawing

Chapter - 11

Apparatus case, Outdoor installation, Fuses, ARA Terminal, Hylam Sheet, Phenolic Laminated sheets etc.

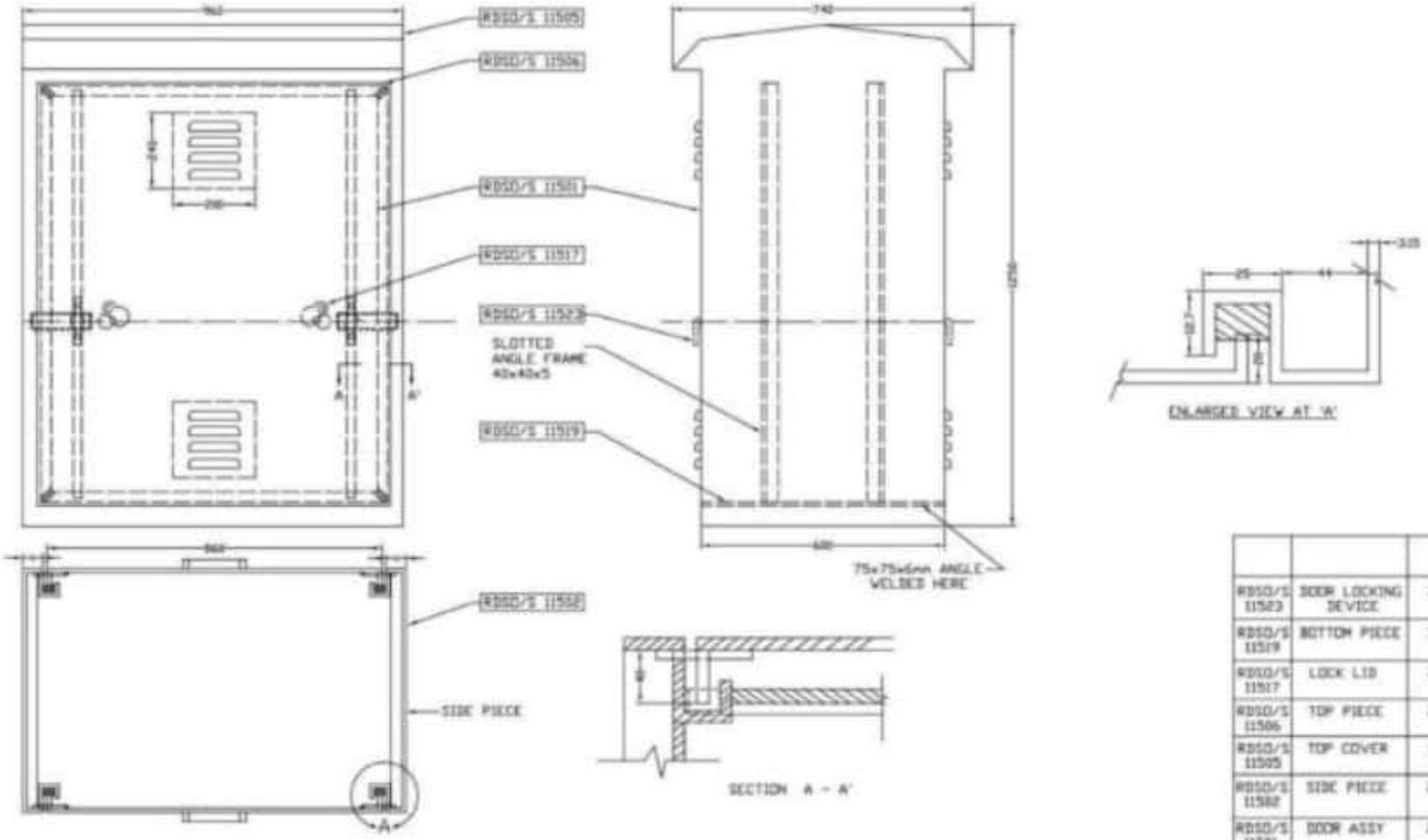

PART NO.	DESCRIPTION	NO. REQD
RDSO/S 11523	DOOR LOCKING DEVICE	2
RDSO/S 11519	BOTTOM PIECE	1
RDSO/S 11517	LOCK LID	2
RDSO/S 11506	TOP PIECE	2
RDSO/S 11505	TOP COVER	1
RDSO/S 11502	SIDE PIECE	2
RDSO/S 11501	DOOR ASSY	2

R. D. S. O.

APPARATUS CASE ASSEMBLY (LARGE)

RDSO/S 11500

12. LOCK LID TO BE RIVETTED TO COVER KEY HOLE.
11. OPENING OF BOTH THE DOORS OF APPARATUS CASE SHOULD BE WITHIN 90 deg. TO 100 deg. ALT. 1
10. WEIGHT OF APPARATUS CASE (WITHOUT 'E' TYPE LOCK) IS APPROX. 160 kg. THE WEIGHT SHALL NOT FALL BELOW THE GIVEN VALUE BY MORE THAN 5%.
9. MANUFACTURER SHALL GIVE HIS PERMANENT IDENTITIFICATION MARK, MANUFACTURE'S NAME & YEAR OF MANUFACTURING INSIDE DOOR AT CONSPICUOUS LOCATION.
8. MARK SHOWN "X" IS METLIC ARC WELDING.
7. HOLE CENTERS SHALL NOT DEVIATE MORE THAN 0.5mm.
6. ALL DIMENSIONS SHALL BE WITHIN +/-1 mm UNLESS OTHERWISE SPECIFIED.
5. METALLIC ARC WELDING SHALL BE USED WHEREVER REQUIRED.
4. APPARATUS CASE SHALL BE APPLIED WITH THREE COATS OF PAINT-(1st COAT- RED LEAD AS PER IS- 102, (2nd COAT- RED OXIDE, (3rd COAT- WHITE ALUMINIUM PAINT AS PER IS- 165.
3. MINIATURE E-TYPE LOCK SHALL BE PROVIDED AS PER KEY WARD NO. GIVEN BY THE RAILWAY.
2. DURABLE AND WATER PROOF GASKET LINING IN GROOVE SHALL BE PROVIDED AT HOUSING OF DOOR TO PREVENT INGRESS OF RAIN, INSECTS ETC.
1. ALL DIMENSIONS ARE IN MILLIMETERS.

MATL. & SPEC	MS/SHEET OF 3.25 mm(10 SWG) IS- 2062			
SCALE	DO NOT SCALE	ALT	DESCRIPTION	DATE
		1	NOTE NO. 10 MODIFIED.	

NOTE AND SPECIFICATION

CALCULATION REGISTER NO. | DRN. V.K.SHARMA | TRE. | CASE NO. STS/E/APPARATUS CASE | NOTIFICATION NO.
PAGES | DONE BY | CHD. P.P.SHARTTYA | CHD. | PASSED | APPROVED

NOTE:-

1. ALL DIMENSIONS IN M.M.
2. FOUNDATION SHOULD BE CAST, PREPARING TEMPLATE FOR THE FOUNDATION BOLTS.
3. OUTER SURFACE SHOULD BE PLASTERED WITH 1:4 CEMENT SAND UP TO 300 FROM THE TOP OF THE SURFACE.
4. ON ALL SIDES EARTH SHOULD BE RAMMED UP TO THE LEVEL SHOWN IN THE SKETCH.
5. FOUNDATION WITH MIXTURE OF CEMENT, SAND AND STONE CHIPS. SIZE 20C(1:3:6)

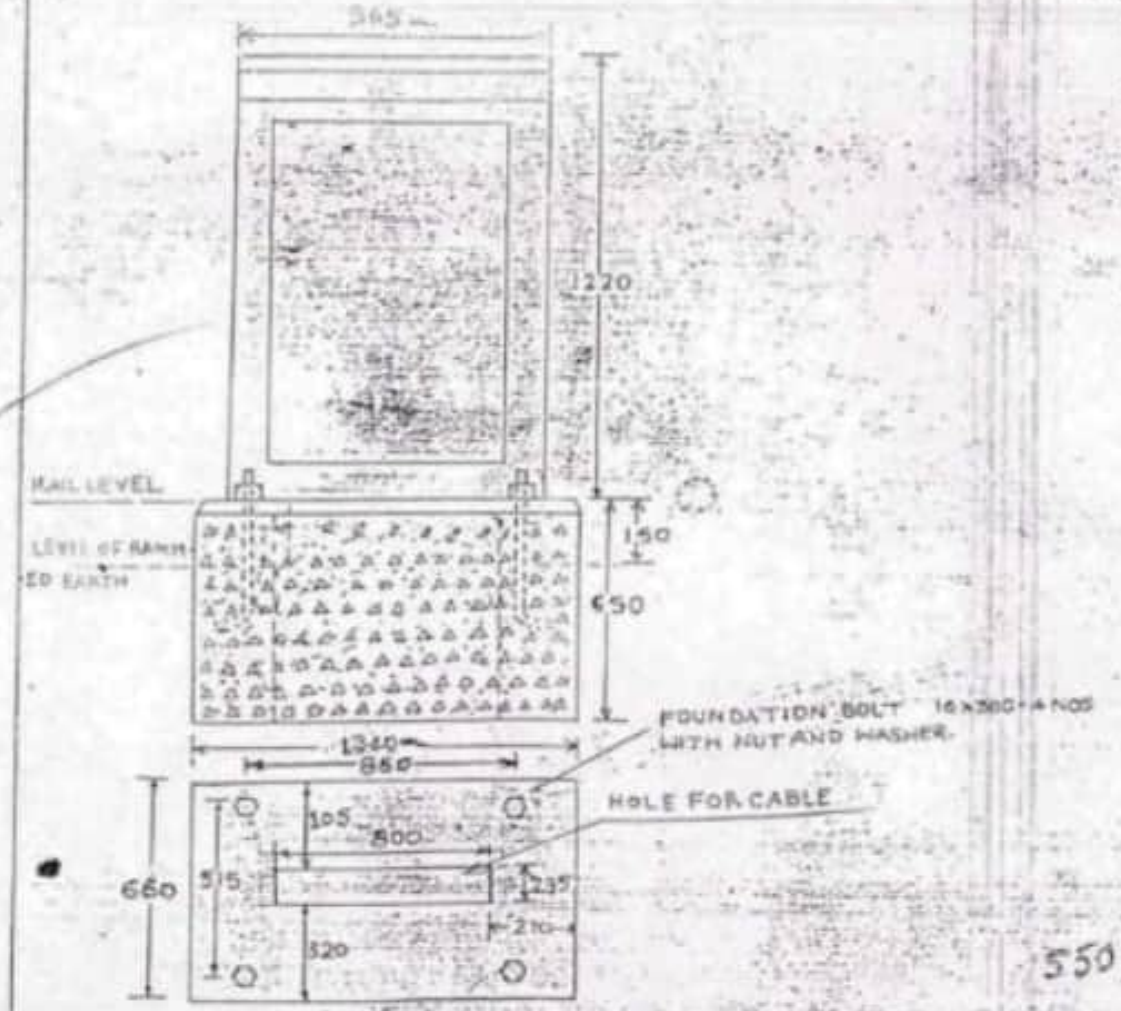

SUPERSEDES DRG No. S & T - C 33 (NXG)

550 - 60

THIS DRG SHOULD BE USED ONLY IN TENDER CASE NO CSTE/CON/94, CSTE/CON/101, CSTE/CON/103 & CSTE/CON/88

E.R.	APPROVED	CHECKED	DRAWN.	FOUNDATION FOR APPARATUS CASE (SINGLE)	S.K. NO.
					S&T-6-6/98 (NXG)

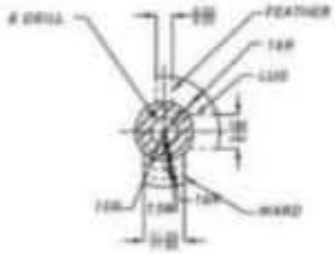

SECTION YY

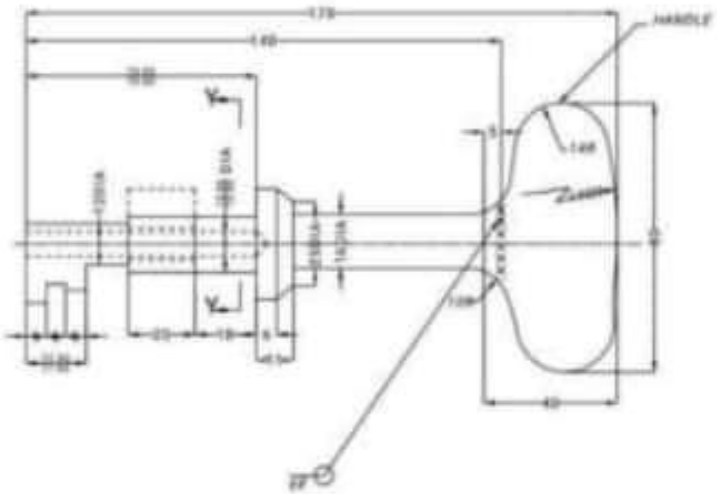

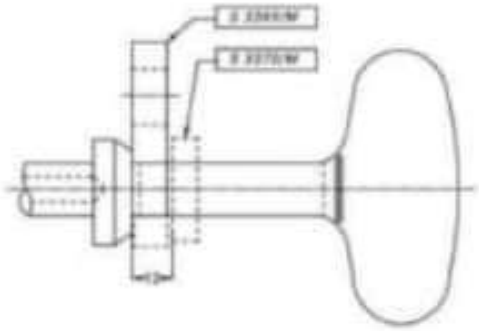

SKETCH 'A'

6. HANDLE SHALL BE WELDED SEPARTEY & REST OF THE KEY MAY BE TURNED OUT FROM SOLID ROUND BAR IF THE KEY IS TO BE USED WITH GATE LOCKS LINK (S 3369/M) SHALL FIRST BE INSERTED INTO THE KEY SHANK AND COLLAR (S 3370/M) WELDED IN POSITION AS SHOWN IN SKETCH 'A' IN LONG DOTTED BEFORE HANDLE IS WELDED.
5. THE TYPE OF WARD ON THE KEY SHALL ALSO BE IN ACCORDANCE WITH THE DRAWING NO. 2378A1/M-A43/M AS SPECIFIED BY THE PURCHASER.
4. POSITION OF FEATHER & LUG WITH RESPECT TO WARD SHALL BE ACCORDING TO THE TYPE OF KEY SPECIFIED BY THE PURCHASER TO DRAWING NO. S 3378A1/M-A43/M.
3. SIZE OF FEATHER , LUG & WARD SHALL NOT DEVIATE BY MORE THAN +-0.1 UNLESS OTHERWISE SPECIFIED.
2. ALL DIMENSIONS SHALL BE WITHIN +-0.5 , UNLESS OTHERWISE SPECIFIED, DEPENDING UPON RELATED DIMENSION.
1. ALL DIMENSION IN MILLIMETRES.

NOTE

FINISH ROUGH GROUND ● = 80	12 MACHINE FINISH (GROUND) 40 TO 80	1.6 MACHINE FINISH (GRINDING) 6 TO 40	0.8 MACHINE FINISH (FINE) UPTO 16	GROUND	HARDENED GROUND	

● SURFACE NUMBER IN MICRONS

MATL & SPEC	STEEL IS : 226 HRS / 510
SCALE	DO NOT SCALE

ALT	DESCRIPTION	DATE

NO. OFF	DESCRIPTION FOR ASSEMBLY	NOT

R. D. S. O.

KEY LOCK ('E' TYPE)-KEY

IRS (S)

S 3377/M

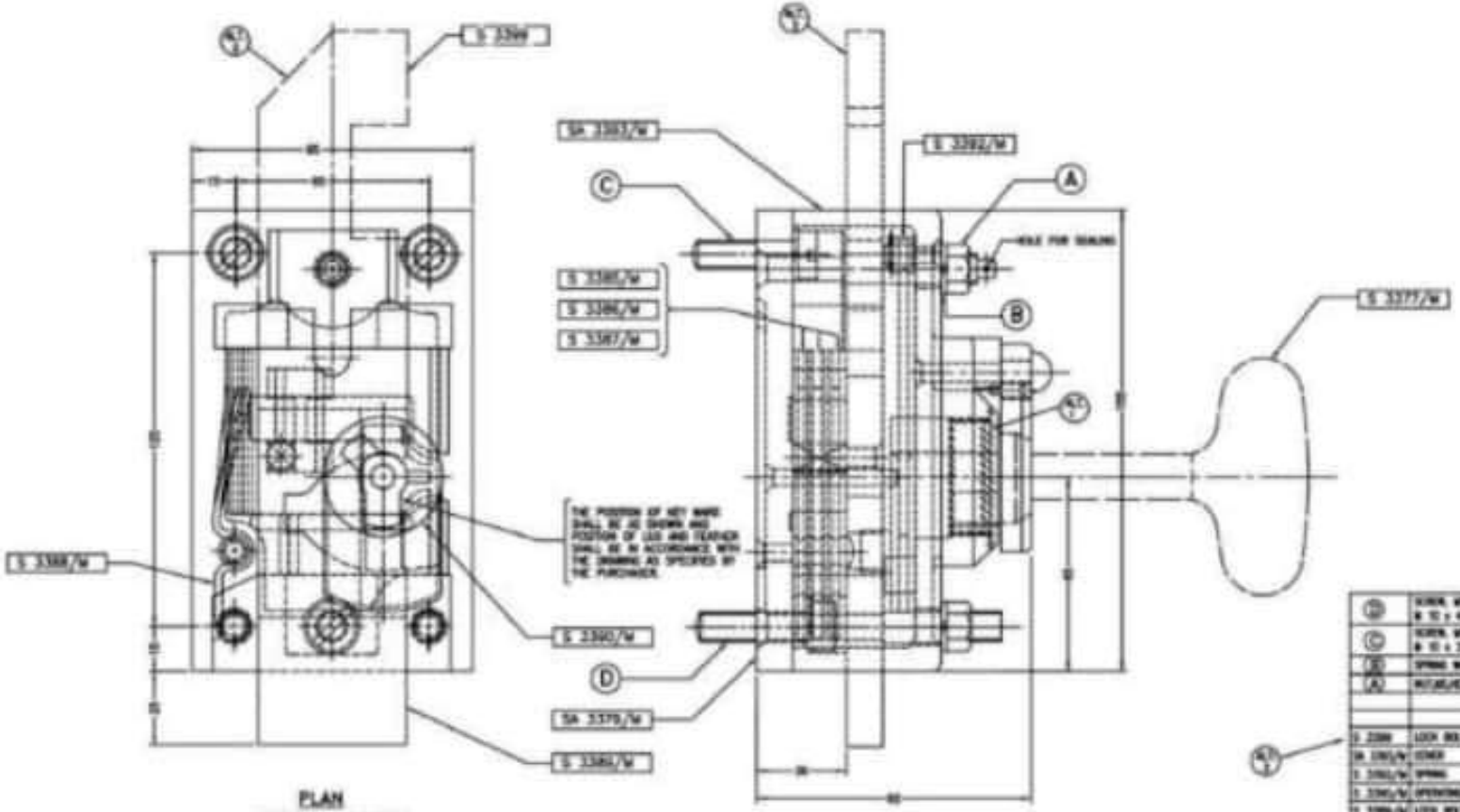

PLAN
WITHOUT COVER

KEY CAN ONLY BE TAKEN OUT WHEN THE LOCK BOLT IS OUT AND KEY WARD IS IN POSITION AS SHOWN

PART No.	DESCRIPTION	SA 3376/M No.	Tot. req. 3376/M (PER SET)
		1	1
		2	2
			4
		2	2
S 3398	LOCK BOLT	1	–
SA 3383/W	COVER	1	1
S 3392/W	SPRING	1	1
S 3385/W	OPERATING PIECE	1	1
S 3386/W	LOCK BOLT	–	1
S 3387/W	TUMBLER SPRING	2	2
S 3389/W	TUMBLER No. 2	NO REQD	NO REQD
S 3390/W	TUMBLER No. 2	NO REQD	NO REQD
S 3389/W	TUMBLER No. 1	NO REQD	NO REQD
SA 3379/W	BASE	1	1

R. D. S. O.

KEY LOCK ('E' TYPE)

IRS (S)

SA 3376/M-76A *

4. *KEY LOCK 'E' TYPE TO DRG. No. SA 3379A SHALL BE USED FOR WINCH HANDLE LOCKING (SA 81.32 A) OF LIFTING BARRIER.
3. KEY SHALL BE ORDERED SEPARATELY AS PER DRAWING No. S 3377/M.
2. THE ARRANGEMENT OF TUMBLER AND KEY COMBINATIONS SHALL BE MADE IN ACCORDANCE WITH THE DRAWING Nos. S 3378A1/M-A42/M DEPENDING UPON THE TYPE OF KEYS AS SPECIFIED BY THE PURCHASER.
1. ALL DIMENSIONS IN MILLIMETRES.

NOTE

SPEC	IRS : S 30 & S 10
SCALE	MILLIMETRES 10 0 10 20 30 — 1:1 — DO NOT SCALE

ALT.	DESCRIPTION	DATE	No. OFF	FOR ASSEMBLY	DRG. No.
2	DRG. No. SA 3379A ADD NOTE 4 ADDED, PART LIST & VIEW MODIFIED.	5.11.76			
1	VIEW MODIFIED	5.8.74			

SI ADD 3/179 MICRO FILMED 10/97.

CALCULATION REGISTER No.	DRN. G.P. SEN	TRD	CASE No. 27/WM/91	NOTIFICATION No.
PROJ.	CHK BY	CHD. G. CHANDRAMANI	CHD. G.L. MAHSUR	PASSED / APPROVED

DRAWING No. SA 3376/M (MS) INCLUDES UPTO ALT No. NIL OF SA 3376/W (ADV.)

S&T Drawing

Chapter - 12

Cable laying material, cable protection, cable execution, Jointing Kits items etc.

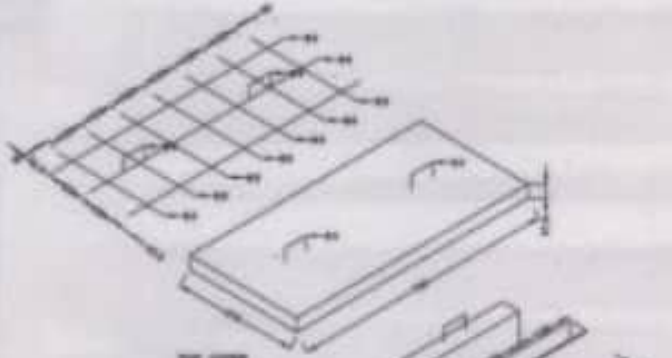

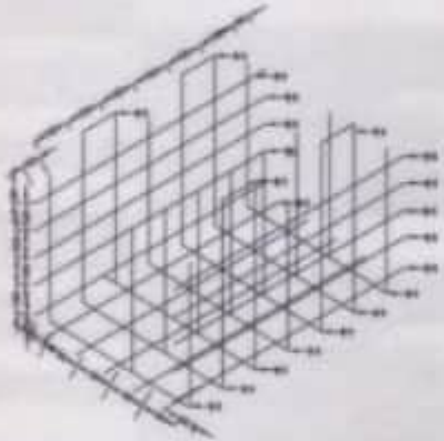

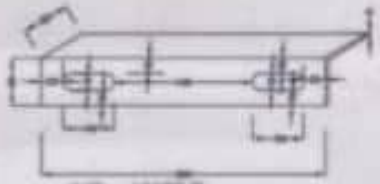

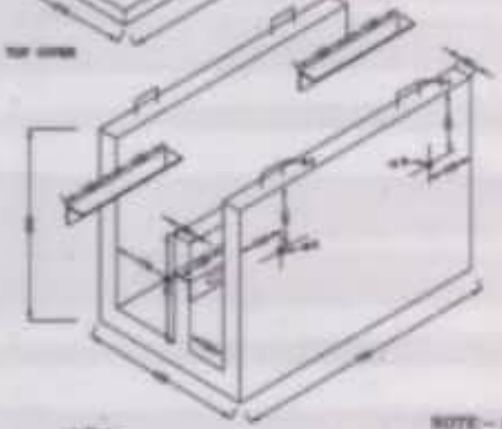

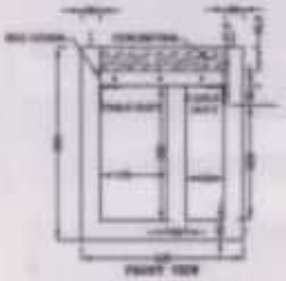

NOTE :- 1. THIMBLING AND CAPPING ARE SUITABLE FOR MOUNTING ADJACENT TO THE TRACK THRESHOLD.
2. THE THIMBLING TO BE ALIGNED BY PUTTING M.S. ANGLE SIZE 50 X 50 X 5 MM LENGTH NOMINAL.
3. 8.0/8.0 MM DIAMETER HIGH STRENGTH DEFORMED STEEL BARS CONFORMING TO IS : 1786 TO BE USED FOR REINFORCEMENT OR AS AN ALTERNATIVE, REINFORCEMENT CAN ALSO BE PROVIDED AS WELDED MESH OF APPROVED MAKE (TATA STEEL, SAIL, IISCO, JSW, ESSAR) CONFORMING TO IS:1566-1982 MADE WITH PLAIN, PLAIN DIAMETER AS PER DRAWINGS (NOT THAT) IN REQUIRED SPACING WITH MINIMUM YIELD STRENGTH OF 500MPA AND MINIMUM PERCENTAGE ELONGATION OF 16% AS PER WTC.WEIGHT TOLERANCE IN KG/SQUARE METER SHOULD BEAR PER IS:1786-2008. LAPPING IF REQUIRED. TO BE PROVIDED AS PER IS:456-2000 USING BONDING WIRE(NTC FROM RAIL LAB IS MINIMUM LAP LENGTH 50D.)
4. M-25 GRADE OF CONCRETE TO BE USED CONFORMING TO IS : 10262-1982 AND IS : 456-2000-40mm NOM COARSE AGGREGATE TO BE USED.
5. OPC OF 43 GRADE TO BE USED CONFORMING TO IS : 8112-1989.
6. THE ACCEPTANCE TEST SHALL BE CONDUCTED IN A RECOGNIZED LABORATORY AND THE COST OF THE TEST AS CHARGED BY THE LABORATORY SHALL BE BORNE BY THE CONTRACTOR.
7. CURING SHALL BE DONE AS PER THE IS 456-2000.
8. DUCT SHOULD BE FACTORY MADE.
9. ALL DIMENSIONS ARE IN MILLIMETER.
10. 18 MM DIAMETER SLOTTED HOLE SHALL BE PROVIDED IN M.S. ANGLE.
11. TWO SETS OF NUT,BOLT,TWO WASHERS SHALL BE SUPPLIED WITH EACH DUCT M 16 X 90 MM HALF THREADED CONFORMING TO SPECIFICATION IS 1363(PART-1,2002).
12. CONCRETING TO BE DONE ABOVE THE COVER FOR WHICH SEPARATE ITEM SHOULD BE PROVIDED IN TENDER SCHEDULE.

SUPERSEDES TYPICAL DRAWING No.E1/TMC/1/24 VPTO ALT1

TYPE I - FOR CABLES 30 TO 60 + TELECOM

	E.R	APPROVED		CHECKED				DRAWN	SCALE	TYPICAL DRAWING FOR RCC CABLE DUCT TYPE I	DRG. NO. E/TYP/CABL SHEET 20 OF 27
		DESIGN	DATE					DATE			

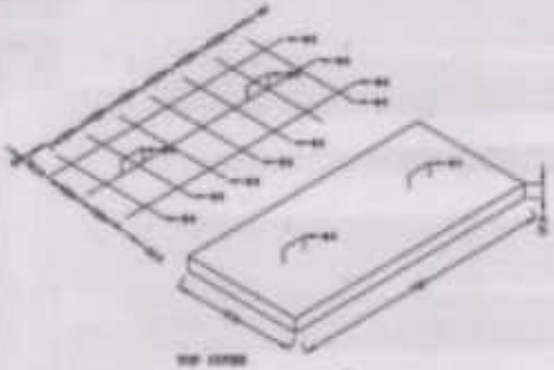

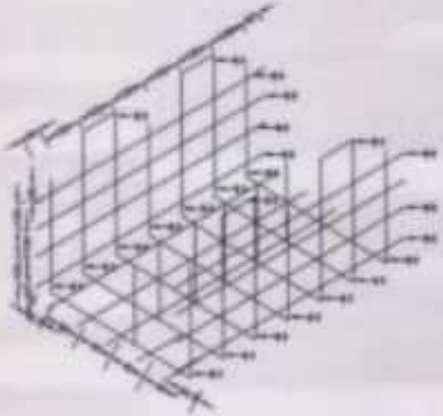

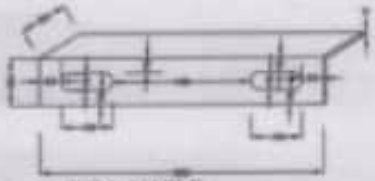

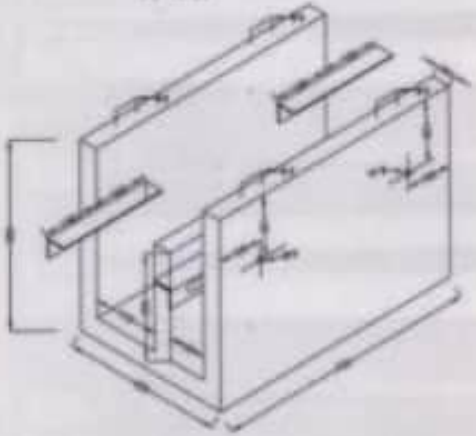

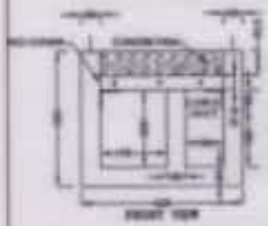

NOTE:-

1. TRUNKING AND CAPPING ARE SUITABLE FOR MOUNTING ADJACENT TO THE TRACK FENCINGS.
2. THE TRUNKING TO BE ALIGNED BY PUTTING M.S. ANGLE SIZE. 50 X 50 X 5 MM. LENGTH 300MM.
3. 6.0/8.0 MM. DIAMETER HIGH STRENGTH DEFORMED STEEL BARS CONFORMING TO IS : 1139-66 TO BE USED FOR REINFORCEMENT. OR AS AN ALTERNATIVE, REINFORCEMENT CAN ALSO BE PROVIDED AS WELDED MESH OF APPROVED MAKE (TATA STEEL, SAIL, JSPL, JSW, ESSL) CONFORMING TO IS:1566:1982 MADE WITH 5MM. 6MM DIAMETER AS PER DRAWINGS (NOT THAT) IN REQUIRED SPACING WITH MINIMUM YIELD STRENGTH OF 500MPA AND MINIMUM PERCENTAGE ELONGATION OF 14% AS PER MTC.WEIGHT TOLERANCE IN KG/RUNNING METER SHOULD BEAR PER IS:1786:2008. LAPPING IF REQUIRED. TO BE PROVIDED AS PER IS:456:2000 USING BINDING WIRE(NOT FROM MAIN LAP IS MORE).(LAP LENGTH 50D).
4. M-20 GRADE OF CONCRETE TO BE USED CONFORMING TO IS : 10262-1982 AND IS : 456-2000-(20mm SIZE CHARGE AGGREGATE TO BE USED.
5. OPC OF 43 GRADE TO BE USED CONFORMING TO IS : 8112-1989.
6. THE ACCEPTANCE TEST SHALL BE CONDUCTED IN A RECOGNIZED LABORATORY AND THE COST OF THE TEST AS CHARGED BY THE LABORATORY SHALL BE BORNE BY THE CONTRACTOR.
7. CURING SHALL BE DONE AS PER THE IS 456-2000.
8. DUCT SHOULD BE FACTORY MADE.
9. ALL DIMENSIONS ARE IN MILLIMETER.
10. 18 MM DIAMETER SLOTTED HOLE SHALL BE PROVIDED IN M.S. ANGLE.
11. TWO SETS OF NUT,BOLT,TWO WASHERS SHALL BE SUPPLIED WITH EACH DUCT M 16 X 60 MM HALF THREADED CONFORMING TO SPECIFICATION IS: 1364(PART-1-2002).
12. CONCRETING TO BE DONE ABOVE THE COVER FOR WHICH SEPARATE ITEM SHOULD BE PROVIDED IN TENDER SCHEDULE.

SUPERSEDES TYPICAL DRAWING No.T.1/DMT/3/94 CPTTC ALT.1.

TYPE II - FOR CABLES 20 TO 30 + TELECOM

	E.R	APPROVED	CHECKED			DRAWN	SCALE

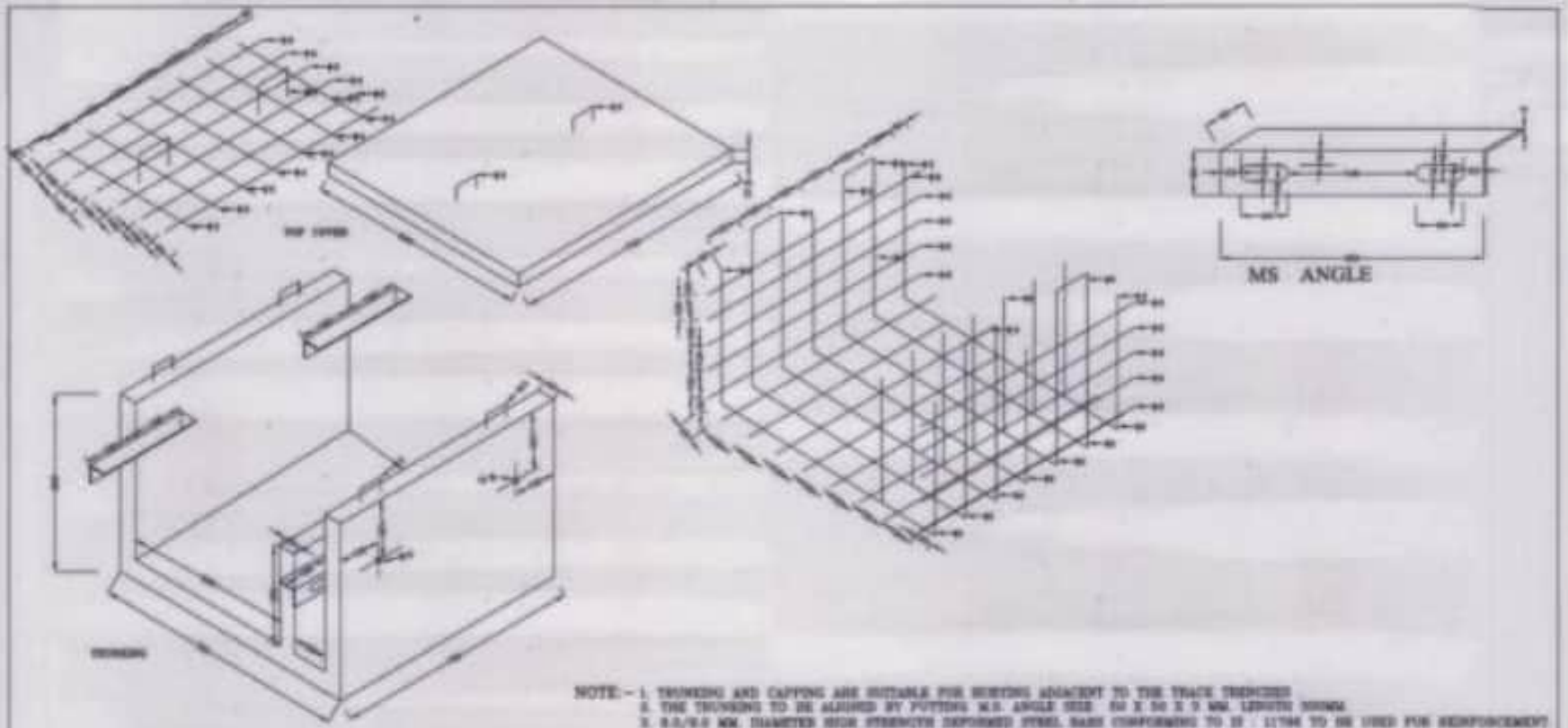

NOTE:-
1. TRUNKING AND CAPPING ARE SUITABLE FOR MOUNTING ADJACENT TO THE TRACK TRENCHES.
2. THE TRUNKING TO BE ALIGNED BY PUTTING M.S. ANGLE SIZE 50 X 50 X 5 MM. LENGTH 300MM.
3. 8.0/6.0 MM. DIAMETER HIGH STRENGTH DEFORMED STEEL BARS CONFORMING TO IS : 1786 TO BE USED FOR REINFORCEMENT OR AS AN ALTERNATIVE, REINFORCEMENT CAN ALSO BE PROVIDED AS WELDED MESH OF APPROVED MAKE (TATA STEEL, SAIL, JSPL, JSW, ESSL) CONFORMING TO IS:1566:1982 MADE WITH 6MM, 6MM DIAMETER AS PER DRAWINGS (NOT THAT) IN REQUIRED SPACING WITH MINIMUM YIELD STRENGTH OF 500MPA AND MINIMUM PERCENTAGE ELONGATION OF 14% AS PER MTC.WEIGHT TOLERANCE IN KG/SQUARE METER SHOULD BEAR PER IS:1786-2008. LAPPING IF REQUIRED, TO BE PROVIDED AS PER IS:456:2000 USING BINDING WIRE(NOT FROM NAIL LAP IS MUST) (LAP LENGTH 500).
4. M-25 GRADE OF CONCRETE TO BE USED CONFORMING TO IS : 10262-1982 AND IS : 456-2000.-10mm SIZE COARSE AGGREGATE TO BE USED.
5. OPC OF 43 GRADE TO BE USED CONFORMING TO IS : 8112-1989.
6. THE ACCEPTANCE TEST SHALL BE CONDUCTED IN A RECOGNIZED LABORATORY AND THE COST OF THE TEST AS CHARGED BY THE LABORATORY SHALL BE BORNE BY THE CONTRACTOR.
7. CURING SHALL BE DONE AS PER THE IS 456-2000.
8. DUCT SHOULD BE FACTORY MADE.
9. ALL DIMENSIONS ARE IN MILLIMETER.
10. 10 MM DIAMETER TAUTTED HOLE SHALL BE PROVIDED IN M.S. ANGLE.
11. TWO SETS OF NUT,BOLT,TWO WASHERS SHALL BE SUPPLIED WITH EACH DUCT M 10 X 80 MM HALF THREADED CONFORMING TO SPECIFICATION IS 1363(PART-1:2002).
12. CONCRETING TO BE DONE ABOVE THE COVER FOR WHICH SEPARATE ITEM SHOULD BE PROVIDED IN TENDER SCHEDULE.

SUPERSEDES TYPICAL DRAWING No.E1/Cmt/1/04 UPTO ALT.1

TYPE VII - FOR CABLES 100 TO 150.

	E.R	APPROVED	CHECKED		DRAWN	SCALE	TYPICAL DRAWING FOR ALL CABLE DUCT TYPE VII	DRG. NO. E/TT/1006
								SHEET NO.1/7

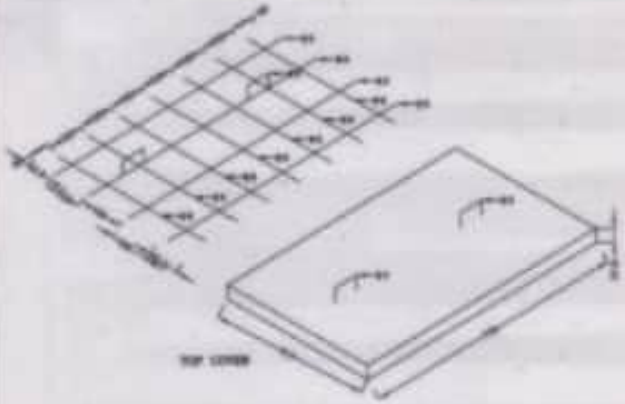

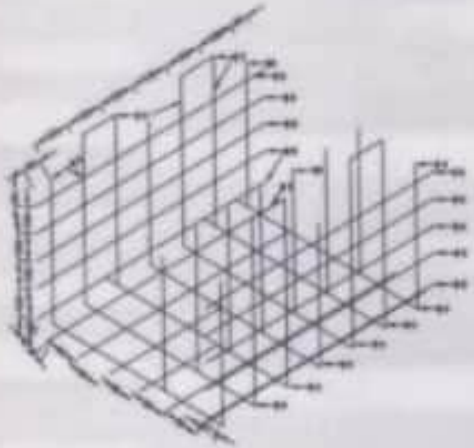

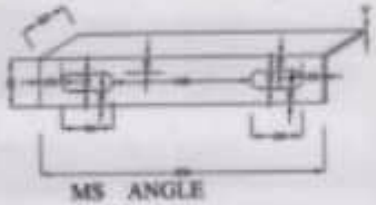

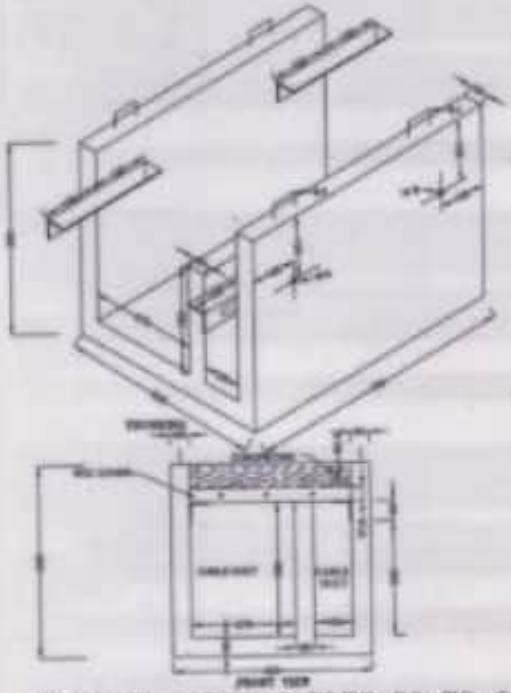

NOTE :-

1. TRUNKING AND CAPPING ARE SUITABLE FOR MOUNTING ADJACENT TO THE TRACK TRENCHES.
2. THE TRUNKING TO BE ALIGNED BY PUTTING M.S. ANGLE SIZE 50 X 50 X 5 MM LENGTH 300MM.
3. 8.0/9.0 MM DIAMETER HIGH STRENGTH DEFORMED STEEL BARS CONFORMING TO IS : 1139/66 TO BE USED FOR REINFORCEMENT. OR AS AN ALTERNATIVE, REINFORCEMENT CAN ALSO BE PROVIDED AS WELDED MESH OF APPROVED MAKE (TATA STEEL, SAIL, JSPL, JSW, ESSL) CONFORMING TO IS:1566:1982 MADE WITH 9MM, 8MM DIAMETER AS PER DRAWING (NOT TMT) IN REQUIRED SPACING WITH MINIMUM YIELD STRENGTH OF 550MPa AND MINIMUM PERCENTAGE ELONGATION OF 14% AS PER IS:432(PART-1). LAPPING IF REQUIRED, TO BE PROVIDED AS PER IS:456:2000 USING BINDING WIRE(NOT FROM BARS, LAP IS NOT) (LAP LENGTH 50D).
4. M-25 GRADE OF CONCRETE TO BE USED CONFORMING TO IS : 456-2000 AND IS : 456-2000-10mm SIZE COARSE AGGREGATE TO BE USED.
5. OPC OF 43 GRADE TO BE USED CONFORMING TO IS : 8112-1989.
6. THE ACCEPTANCE TEST SHALL BE CONDUCTED IN A RECOGNIZED LABORATORY AND THE COST OF THE TEST AS CHARGED BY THE LABORATORY SHALL BE BORNE BY THE CONTRACTOR.
7. CURING SHALL BE DONE AS PER THE IS: 456-2000.
8. DUCT SHOULD BE FACTORY MADE.
9. ALL DIMENSIONS ARE IN MILLIMETER.
10. 18 MM DIAMETER SLOTTED HOLE SHALL BE PROVIDED IN M.S. ANGLE.
11. TWO SETS OF NUT,BOLT,TWO WASHERS SHALL BE SUPPLIED WITH EACH DUCT M 16 X 40 MM HALF THREADED CONFORMING TO SPECIFICATION IS: 1364(PART-1:2002).
12. CONCRETING TO BE DONE ABOVE THE COVER FOR WHICH SEPARATE ITEM SHOULD BE PROVIDED IN TENDER SCHEDULE.

SUPERSEDES TYPICAL DRAWING No.E1/TMC/1/04 UPTO ALT.1

	E.R	APPROVED		CONSULTED				DRAWN / SCALE	TYPICAL DRAWING FOR RCC CABLE DUCT TYPE VI	DRG. NO. E/TTT/0006
		DESIGN	CHECKED BY							SHEET NO.6/7

TYPE VI - FOR CABLES 50 TO 90

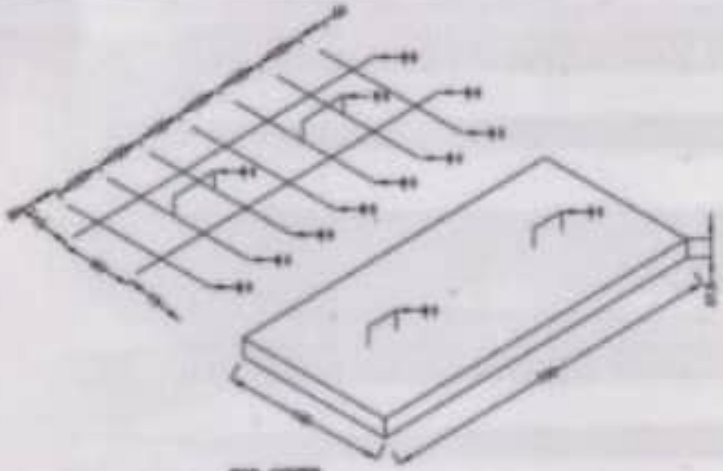

TOP COVER

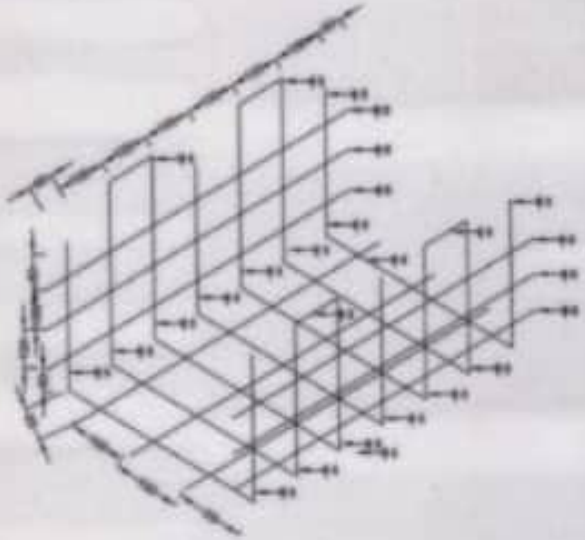

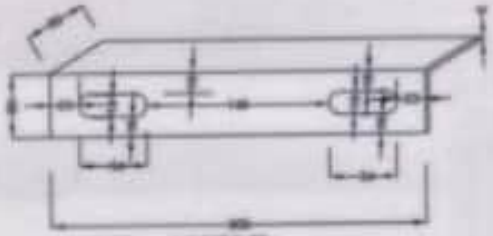

MS ANGLE

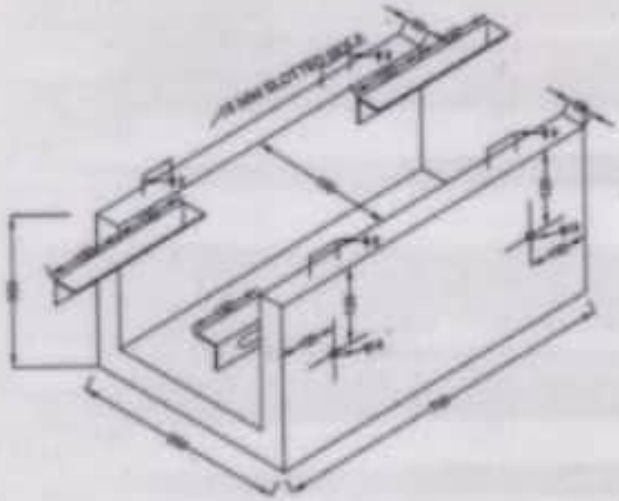

TRUNKING

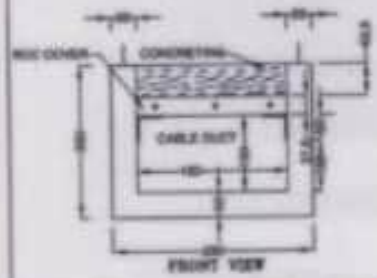

FRONT VIEW

TYPE V – FOR CABLES UPTO 8.

NOTE:-

1. TRUNKING AND CAPPING ARE SUITABLE FOR BURYING ADJACENT TO THE TRACK TRENCHES.
2. THE TRUNKING TO BE ALIGNED BY PUTTING M.S. ANGLE SIZE 50 X 50 X 3 MM. LENGTH 300MM.
3. 6.0/8.0 MM. DIAMETER HIGH STRENGTH DEFORMED STEEL BARS CONFORMING TO IS : 11700 TO BE USED FOR REINFORCEMENT. OR AS AN ALTERNATIVE, REINFORCEMENT CAN ALSO BE PROVIDED AS WELDED MESH OF APPROVED MAKE (TATA STEEL, SAIL, JSPL, JSW, HSIL) CONFORMING TO IS.1566:1982 MADE WITH 8MM, 6MM DIAMETER AS PER DRAWINGS (NOT TMT) IN REQUIRED SPACING WITH MINIMUM YIELD STRENGTH OF 550MPA AND MINIMUM PERCENTAGE ELONGATION OF 16% AS PER MTC.WEIGHT TOLERANCE IN KG/SQUARE METER SHOULD BEAR PER IS.1786:2008. LAPPING IF REQUIRED. TO BE PROVIDED AS PER IS.456:2000 USING BINDING WIRE.(MTC FROM NABL LAB IS MUST). (LAP LENGTH 50D)
4. M-25 GRADE OF CONCRETE TO BE USED CONFORMING TO IS : 10262-1982 AND IS : 456-2000-10mm SIZE COARSE AGGREGATE TO BE USED.
5. OPC OF 43 GRADE TO BE USED CONFORMING TO IS : 81112-1989.
6. THE ACCEPTANCE TEST SHALL BE CONDUCTED IN A RECOGNIZED LABORATORY AND THE COST OF THE TEST AS CHARGED BY THE LABORATORY SHALL BE BORNE BY THE CONTRACTOR.
7. CURING SHALL BE DONE AS PER THE IS: 456-2000.
8. DUCT SHOULD BE FACTORY MADE.
9. ALL DIMENSIONS ARE IN MILLIMETER.
10. 16 MM DIAMETER SLOTTED HOLE SHALL BE PROVIDED IN M.S. ANGLE.
11. TWO SETS OF NUT,BOLT,TWO WASHERS SHALL BE SUPPLIED WITH EACH DUCT M 16 X 60 MM HALF THREADED CONFORMING TO SPECIFICATION IS: 1364(PART-1:2023).
12. CONCRETING TO BE DONE ABOVE THE COVER FOR WHICH SEPARATE ITEM SHOULD BE PROVIDED IN TENDER SCHEDULE.

SUPERSEDES TYPICAL DRAWING No.S.I./S&T/1/24 UPTO ALT.1.

		APPROVED		CHECKED				DRAWN	SCALE		DRG. NO.
	E.R	POSTS	ADDL.C.E							TYPICAL DRAWING FOR RCC RAIL CABLE DUCT TYPE V	
											SHEET NO.5/7

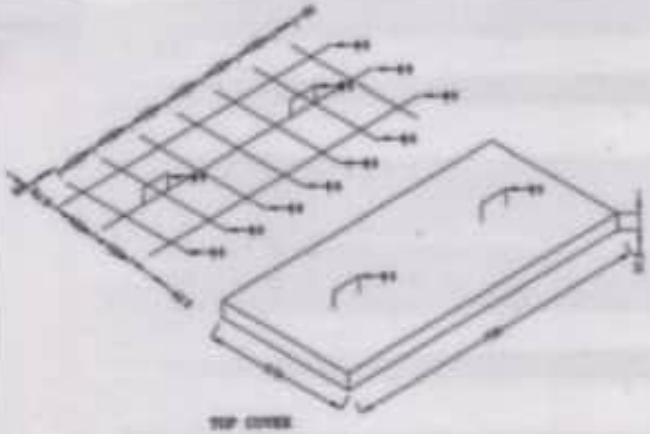

TOP COVER

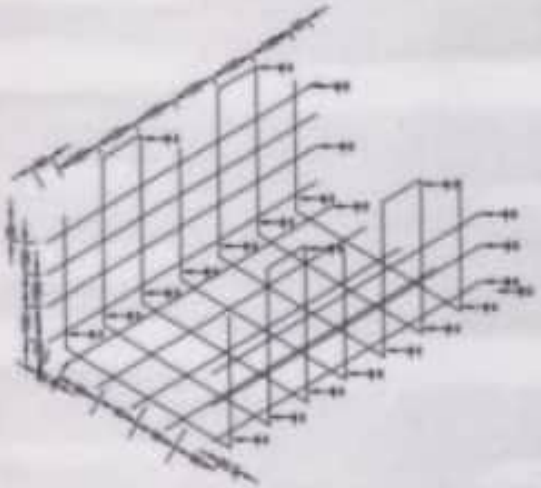

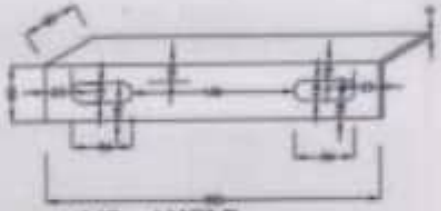

MS ANGLE

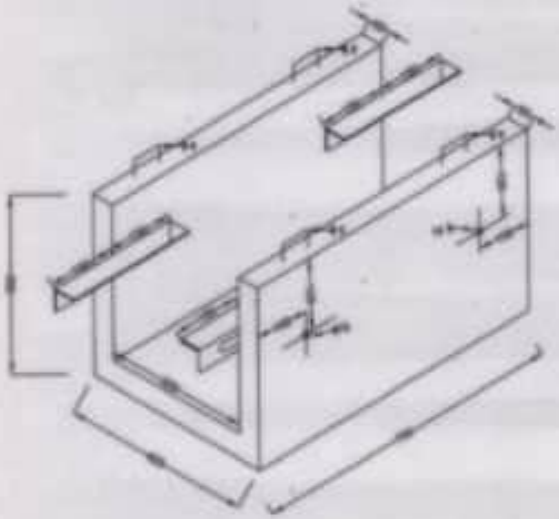

TRUNKING

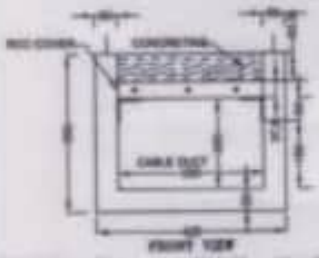

FRONT VIEW

NOTE:-
1. TRUNKING AND CAPPING ARE SUITABLE FOR BURYING ADJACENT TO THE TRACK TRENCHES.
2. THE TRUNKING TO BE ALIGNED BY PUTTING M.S. ANGLE SIZE 50 X 50 X 5 MM. LENGTH 300MM.
3. 6.0/8.0 MM. DIAMETER HIGH STRENGTH DEFORMED STEEL BARS CONFORMING TO IS : 11794 TO BE USED FOR REINFORCEMENT. OR AS AN ALTERNATIVE, REINFORCEMENT CAN ALSO BE PROVIDED AS WELDED MESH OF APPROVED MAKE (TATA STEEL, SAIL, JSPL, JSW, BSSL) CONFORMING TO IS:1566:1982 MADE WITH 5MM, 6MM DIAMETER AS PER DRAWINGS (NOT TMT) IN REQUIRED SPACING WITH MINIMUM YIELD STRENGTH OF 550MPA AND MINIMUM PERCENTAGE ELONGATION OF 14% AS PER MTC.WEIGHT TOLERANCE IN KG/SQUARE METER SHOULD BEAS PER IS.1786:2008. LAPPING IF REQUIRED. TO BE PROVIDED AS PER IS:456:2000 USING BINDING WIRE.(MTC FROM MARL LAB IS MUST).(LAP LENGTH 50D)
4. M-25 GRADE OF CONCRETE TO BE USED CONFORMING TO IS : 10262-1982 AND IS : 456-2000-10mm SIZE COARSE AGGREGATE TO BE USED.
5. OPC OF 43 GRADE TO BE USED CONFORMING TO IS : 8112-1989.
6. THE ACCEPTANCE TEST SHALL BE CONDUCTED IN A RECOGNIZED LABORATORY AND THE COST OF THE TEST AS CHARGED BY THE LABORATORY SHALL BE BORNE BY THE CONTRACTOR.
7. CURING SHALL BE DONE AS PER THE IS: 456-2000.
8. DUCT SHOULD BE FACTORY MADE.
9. ALL DIMENSIONS ARE IN MILLIMETER.
10. 18 MM DIAMETER SLOTTED HOLE SHALL BE PROVIDED IN M.S. ANGLE.
11. TWO SETS OF NUT,BOLT,TWO WASHERS SHALL BE SUPPLIED WITH EACH DUCT M 16 X 80 MM HALF THREADED CONFORMING TO SPECIFICATION IS: 1364(PART-1:2002).
12. CONCRETING TO BE DONE ABOVE THE COVER FOR WHICH SEPARATE ITEM SHOULD BE PROVIDED IN TENDER SCHEDULE.

SUPERSEDES TYPICAL DRAWING No.S.I./S&T/1/24 UP70 ALT.1

TYPE IV - FOR CABLES 40 TO 60 + TELECOM

		APPROVED	CHECKED	DRAWN	SCALE		
	E.R					TYPICAL DRAWING FOR BOX CABLE DUCT TYPE IV	SHEET NO.4/7

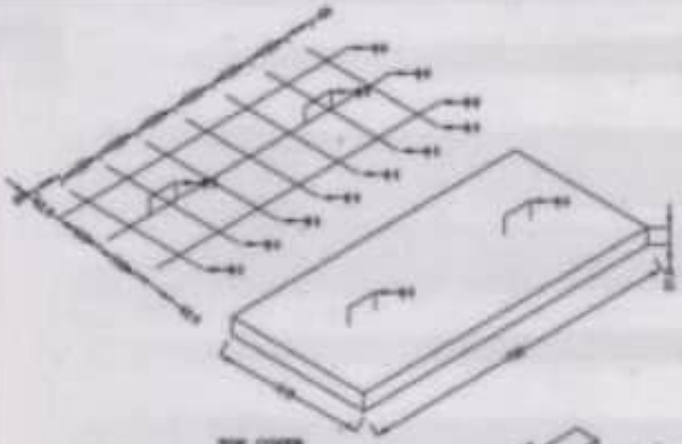

TOP COVER

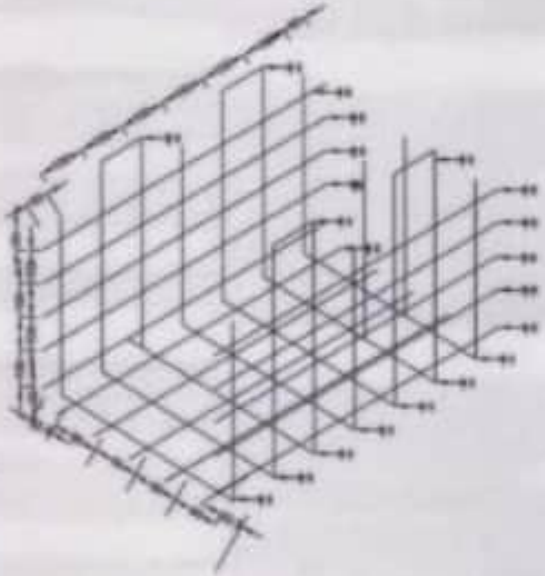

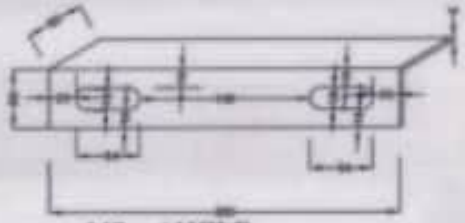

MS ANGLE

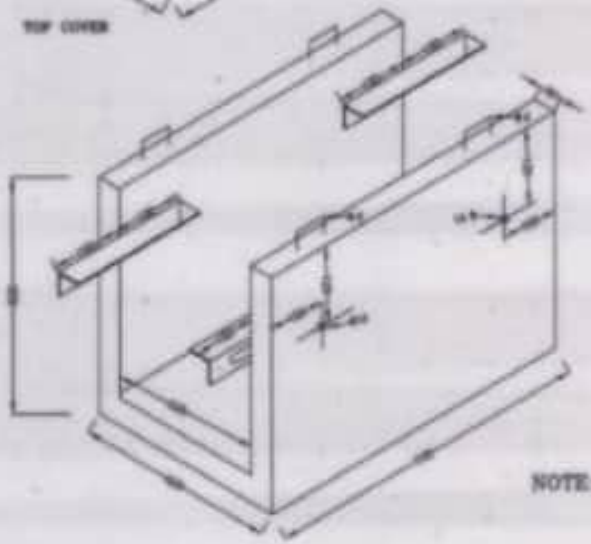

THUNKING

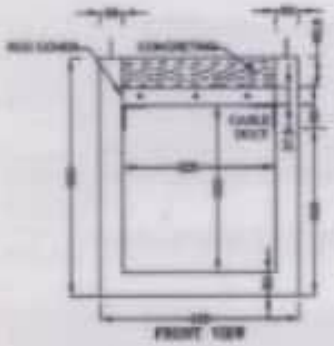

NOTE:-

1. THUNKING AND CAPPING ARE SUITABLE FOR BURYING ADJACENT TO THE TRACK TRENCHES.
2. THE THUNKING TO BE ALIGNED BY PUTTING M.S. ANGLE SIZE 50 X 50 X 3 MM. LENGTH 300MM.
3. 6.0/8.0 MM. DIAMETER HIGH STRENGTH DEFORMED STEEL BARS CONFORMING TO IS : 11786 TO BE USED FOR REINFORCEMENT. OR AS AN ALTERNATIVE, REINFORCEMENT CAN ALSO BE PROVIDED AS WELDED MESH OF APPROVED MAKE (TATA STEEL, SAIL, JSPL, JSW, RINL) CONFORMING TO IS:1566-1982 MADE WITH 6MM, 8MM DIAMETER AS PER DRAWINGS (NOT TMT) IN REQUIRED SPACING WITH MINIMUM YIELD STRENGTH OF 550MPA AND MINIMUM PERCENTAGE ELONGATION OF 16% AS PER MTC.WEIGHT TOLERANCE IN KG/SQUARE METER SHOULD BEAR PER IS:1786-2008. LAPPING IF REQUIRED TO BE PROVIDED AS PER IS:456-2000 USING BINDING WIRE.(MTC FROM NABL LAB IS MUST).(LAP LENGTH 50D)
4. M-25 GRADE OF CONCRETE TO BE USED CONFORMING TO IS : 10262-1982 AND IS : 456-2000-10mm SIZE COARSE AGGREGATE TO BE USED.
5. OPC OF 43 GRADE TO BE USED CONFORMING TO IS : 8112-1989.
6. THE ACCEPTANCE TEST SHALL BE CONDUCTED IN A RECOGNIZED LABORATORY AND THE COST OF THE TEST AS CHARGED BY THE LABORATORY SHALL BE BORNE BY THE CONTRACTOR.
7. CURING SHALL BE DONE AS PER THE IS: 456-2000.
8. DUCT SHOULD BE FACTORY MADE.
9. ALL DIMENSIONS ARE IN MILLIMETER.
10. 18 MM DIAMETER SLOTTED HOLE SHALL BE PROVIDED IN M.S. ANGLE.
11. TWO SETS OF NUT,BOLT,TWO WASHERS SHALL BE SUPPLIED WITH EACH DUCT M 16 X 80 MM HALF THREADED CONFORMING TO SPECIFICATION IS: 1364(PART-1:2002).
12. CONCRETING TO BE DONE ABOVE THE COVER FOR WHICH SEPARATE ITEM SHOULD BE PROVIDED IN TENDER SCHEDULE.

SUPERSEDES TYPICAL DRAWING No.S1/SAT/1/24 UPTO ALT.1

TYPE III – FOR CABLES 80 TO 100 + TELECOM

		APPROVED		CHECKED				DRAWN	SCALE		DRG. NO.
	E.R	POSTS	CHIEF E/N							TYPICAL DRAWING FOR RCC CABLE DUCT TYPE III	SHEET NO.6/7

Drg.No.15-D5

DRAWING FOR ROAD / TRACK CROSSING

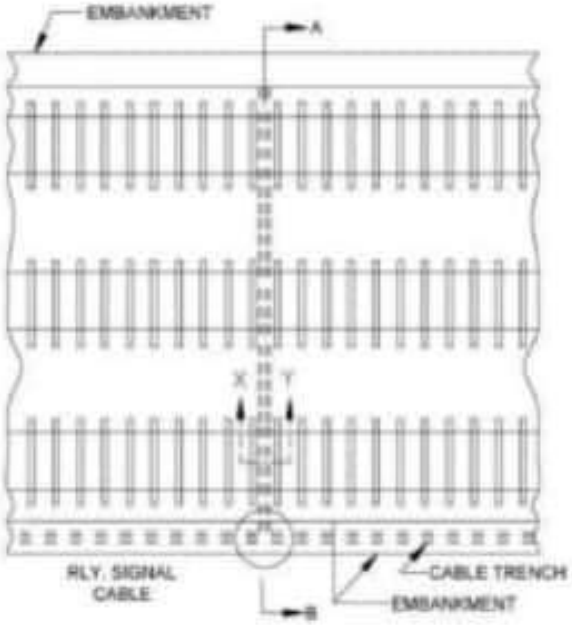

PLAN

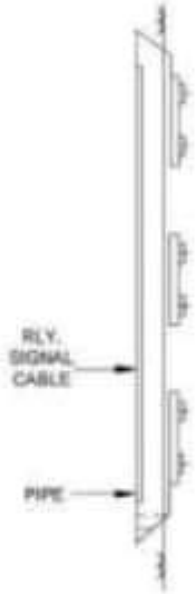

SECTION ON AB

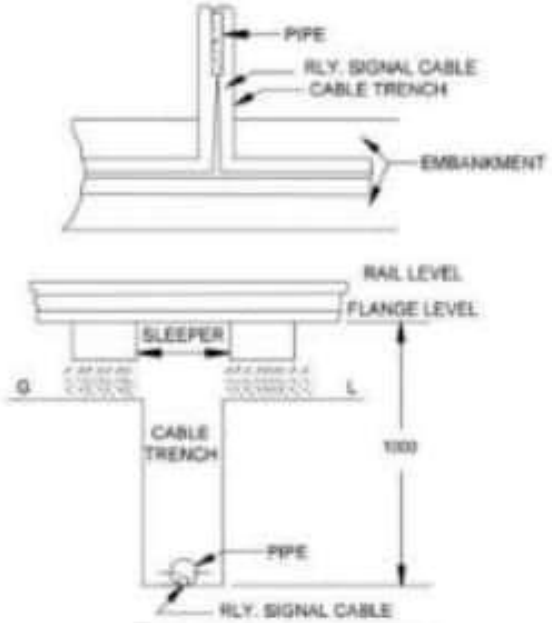

ENLARGED SECTIONAL VIEW AT XY

NOTE: ALL DIMENSIONS ARE IN MILLIMETER.

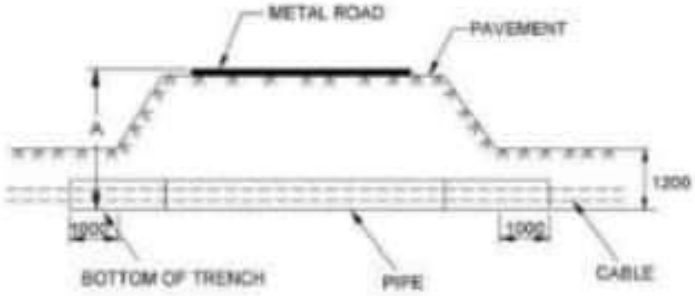

FOR GUIDANCE

Drg.No.15-D6

DRAWING FOR CABLE TROUGH FOR METALLIC BRIDGE

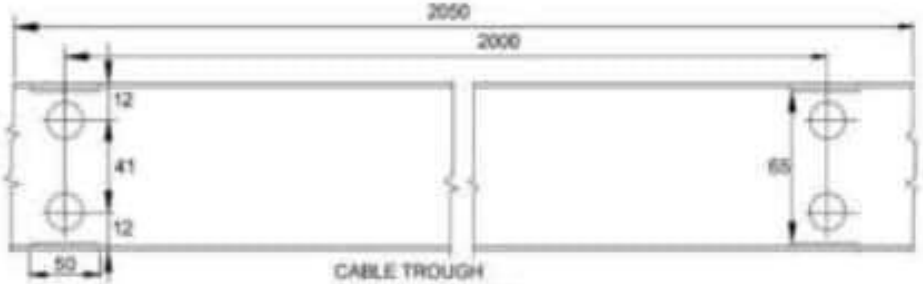

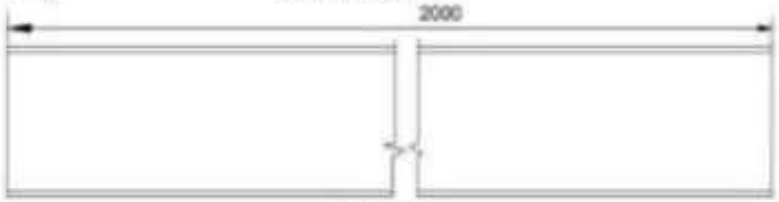

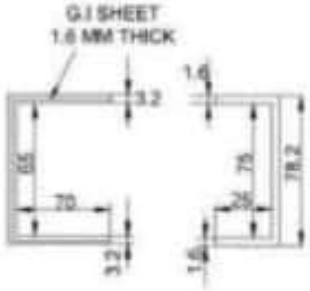

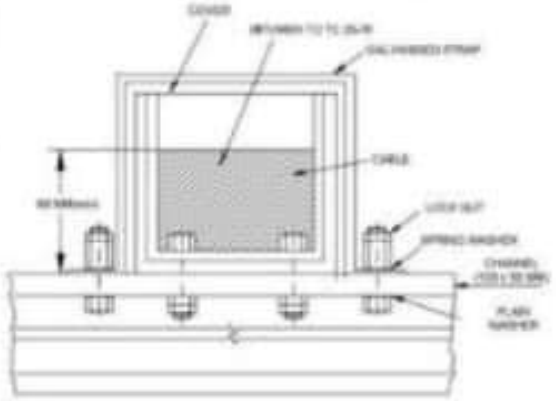

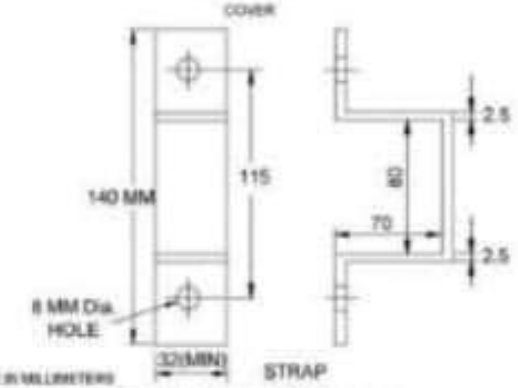

NOTE:-

1. ALL DIMENSIONS ARE IN MILLIMETERS
2. TROUGH TO BE FABRICATED OUT OF GALVANISED STEEL SHEET TO IS:277-1986 WITH FOLLOWING STIPULATIONS. THICKNESS : MINIMUM 1.6 MM GRADE OF ZINC COATING : 200
3. NO WELDING SHALL BE DONE ON ANY COMPONENT FOR FABRICATIONS.
4. CABLE TROUGH TO BE FITTED TELESCOPICALLY.
5. AFTER TIGHTENING NUTS FOR FIXING STRAP THE THREAD OF THE BOLT MAY BE BURRED TO PREVENT THEFT.

SCHEDULE OF MATERIALS

SL.No.	DESCRIPTION	NO.REQD.
1.	TROUGH 2.05 METRES LONG	1
2.	COVER 2.0 METRES LONG	1
3.	STRAP	2
4.	BOLT HEX. HEAD 8 MM Dia. x 32 MM.	4
5.	NUT FOR ABOVE	4
6.	LOCK NUT FOR SL.4	4
7.	DISH WASHER FOR SL.5	4
8.	PLAIN WASHER FOR SL.5	4

FOR GUIDANCE

Drg.No.15-D8

DRAWING FOR CABLE LAYING ON CULVERTS WITH HIGH FLOOD LEVEL

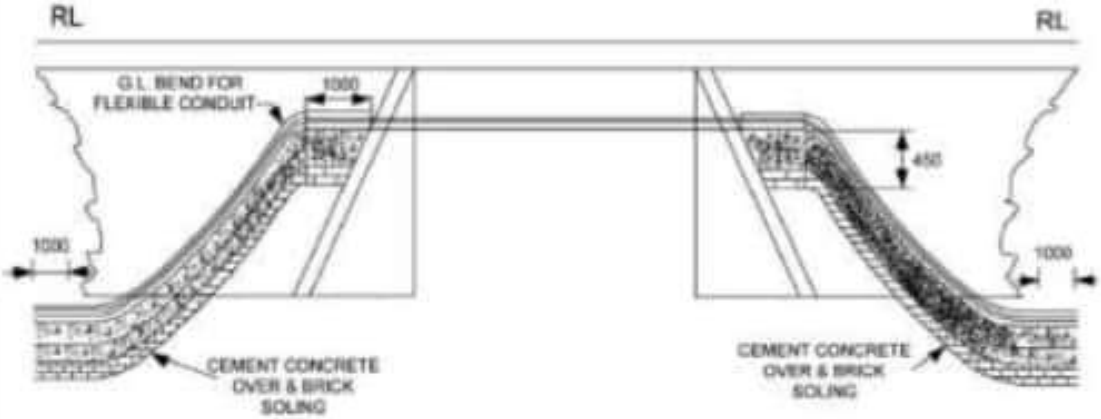

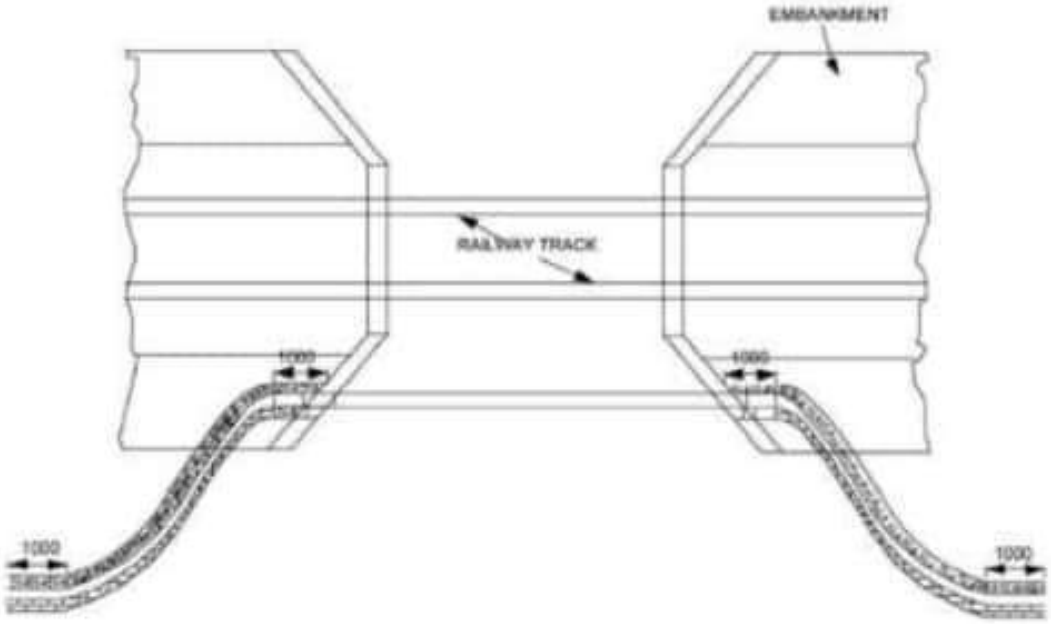

NOTE:-
1. ALL DIMENSIONS ARE IN MILLIMETER.

FOR GUIDANCE

S&T Drawing

Chapter - 13

ELD, Earthing and Bonding etc.

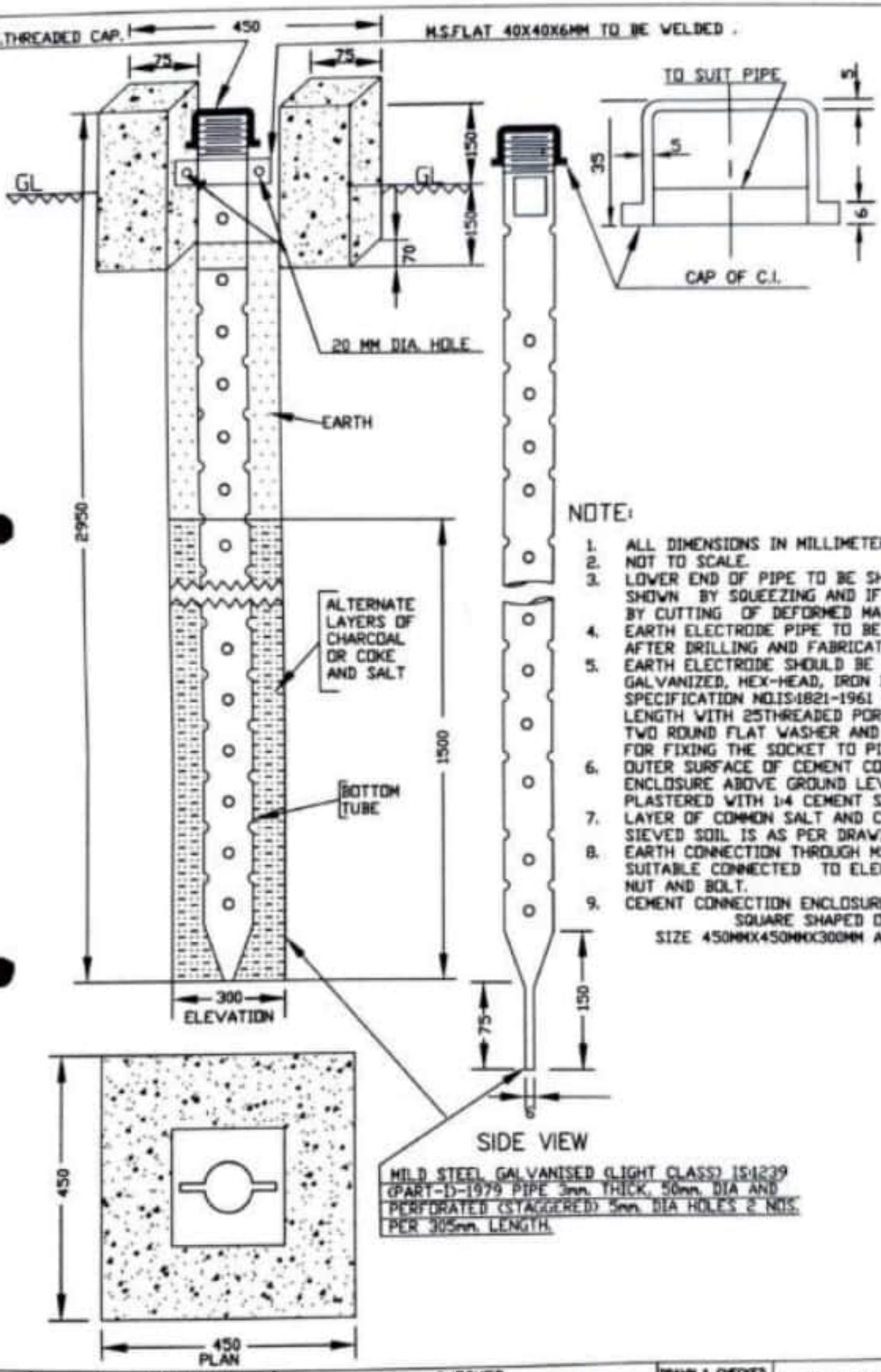

MILD STEEL GALVANISED (LIGHT CLASS) IS:1239 (PART-I)-1979 PIPE 3mm. THICK, 50mm. DIA AND PERFORATED (STAGGERED) 5mm. DIA HOLES 2 NOS. PER 305mm. LENGTH.

NOTE:

1. ALL DIMENSIONS IN MILLIMETER(MM).
2. NOT TO SCALE.
3. LOWER END OF PIPE TO BE SHAPED AS SHOWN BY SQUEEZING AND IF NECESSARY BY CUTTING OF DEFORMED MATERIAL.
4. EARTH ELECTRODE PIPE TO BE GALVANIZED AFTER DRILLING AND FABRICATION.
5. EARTH ELECTRODE SHOULD BE SUPPLIED WITH GALVANIZED, HEX-HEAD, IRON BOLT TO SPECIFICATION NO.IS:1821-1961 (8mm. DIA.X40mm. LENGTH WITH 25THREADED PORTION), TWO ROUND FLAT WASHER AND A NUT TO SUIT FOR FIXING THE SOCKET TO PIPE CLAMP.
6. OUTER SURFACE OF CEMENT CONCRETE ENCLOSURE ABOVE GROUND LEVEL SHOULD BE PLASTERED WITH 1:4 CEMENT SAND.
7. LAYER OF COMMON SALT AND CHARCOAL & SIEVED SOIL IS AS PER DRAWING.
8. EARTH CONNECTION THROUGH MS FLAT/CABLE SUITABLE CONNECTED TO ELECTRODE WITH NUT AND BOLT.
9. CEMENT CONNECTION ENCLOSURE - SQUARE SHAPED OF SIZE 450MMX450MMX300MM AND 75MM THICK.

		APPROVED		CHECKED			DRAWN & CHECKED	TYPICAL DRAWING FOR EARTH ELECTRODE (G.I. PIPE)	DRG. NO.- SL/TYP/0097
NO.-03 OF FILE No. 90.48/2 (PT.-II)	E.R.	(N.K.AGRAWAL)	(V.KUMAR)	(N.SINGH)	(D.KUMAR)	(N.K.UPPADHYAY)	(A.DATTA)		
		PCSTE/ER	CSE/II/ER	DY.CSTE/W/D&D/HQ	ASTE/D&D/HQ	ASTE/HWH/HQ	SSE/W/D		