Wt./ASSLY.	∩-1 FINISH ROUGH	(01) ROUGH CLEANING
Kg	∩-10 FLAME CUT	(18) CHAMFERED
		(016) BURRS REMOVED

SURFACE ROUGHNESS VALUE TO IS:3073

GRADE.NO	N1	N2	N3	N4	N5	N6	N7	N8	N9	N10	N11	N12
Ra µm	.025	.050	0.1	0.2	0.4	0.8	1.6	3.2	6.3	12.5	25	50
SYMBOL	▽▽▽▽			▽▽▽			▽▽			▽		-

ALT. NO.	ALTERATION	REASON	CHECKED BY SSE/VEH	VERIFIED BY ADE/BOGIE	APPROVED BY Dy.CDE/VEH

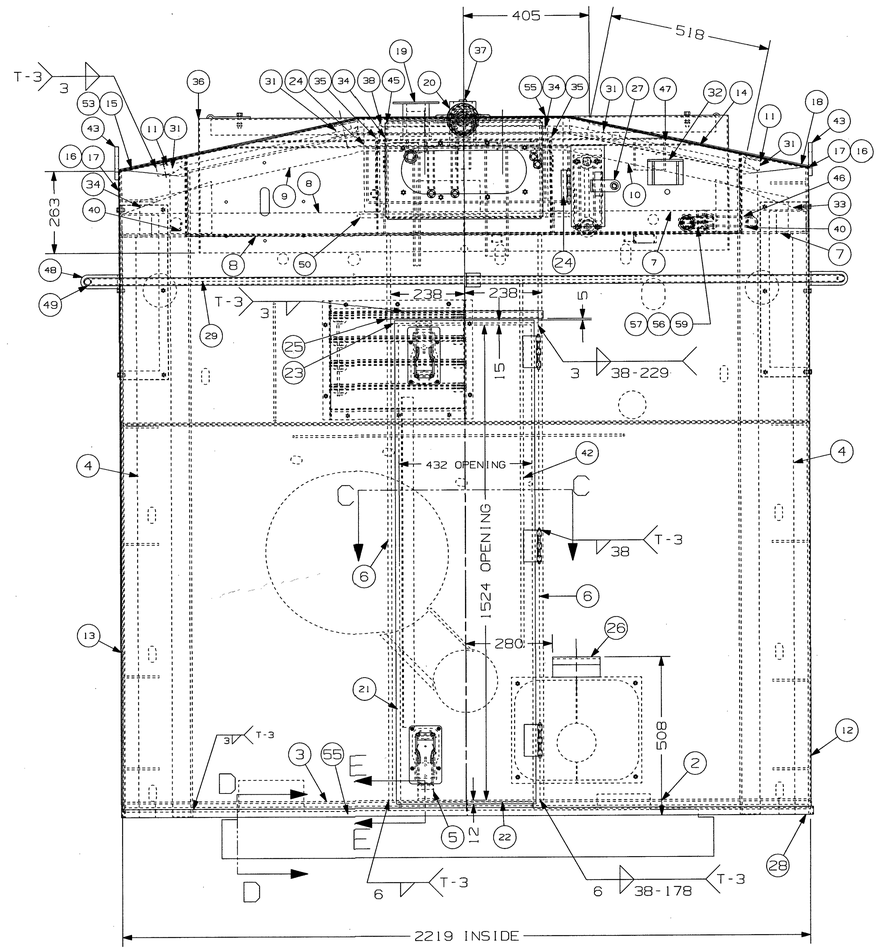

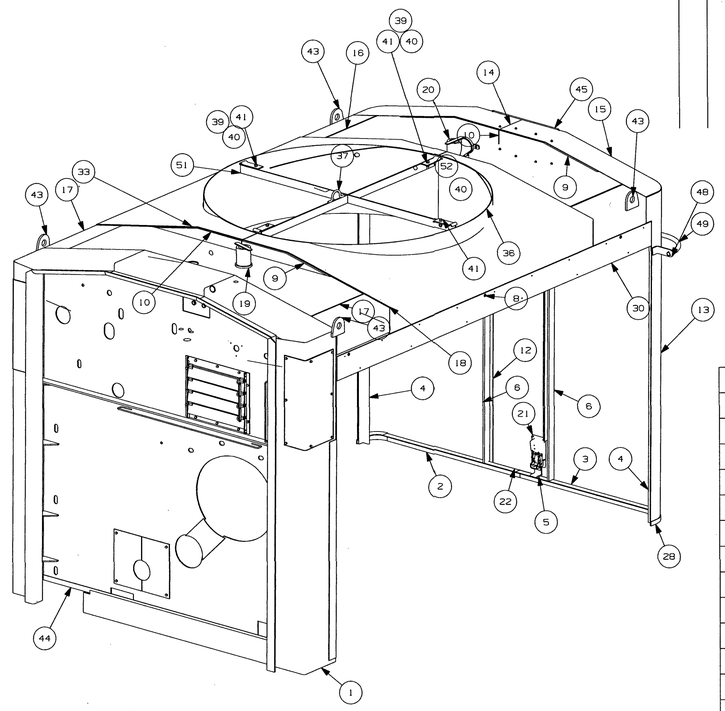

			2	FUN FUNNEL BRACE	35	11319320	-	-	-
			2	FUN FUNNEL BRACE	34	11319215	-	-	-
			4	FUN FUNNEL BRACE	33	11319318	-	-	-
			1	BRACKET FOR AIR HORN	32	11072672	-	-	-
			4	ROOF ANGLE (40X40X6X51 LG).	31	11151067	-	STL.ANGLE	IS:2062, Gr-B.
			2	FILLER PIECE	30	11119226	-	-	TPL-0995
			1	STIFFENER (10X51X1450 LG).	29	11125585	-	STL.PLATE	IS:2062, Gr-B.
			1	FILLER STRIP	28	11319197	-	-	-
			1	INSPECTION DOOR ARRGT.	27	11045905	-	-	-
			1	FOOT STEP	26	11174778	-	-	TPL-0775
			1	GUTTER	25	11105380	-	-	TPL-0507
			2	BACK UP PLATE (6x50x298 LG).	24	11319100	-	STL.PLATE	IS:2062, Gr-B.
			1	DOOR FRAME TOP (40X40X6X467 LG).	23	11157823	-	STL.ANGLE	IS:2062, Gr-B.
			1	FILLER PIECE (3X19X429 LG).	22	11102287	-	STL.SHEET	IS:5986,Gr-205.
			1	DOOR ASSY.	21	11040762	-	-	232V710020
			1	WATER EXPANSION TANK-REAR	20	11707495	-	-	-
			1	WATER EXPANSION TANK-FRONT	19	11707483	-	-	-
			2	ROOF	18	11318053	-	STL.SHEET	IS:5986,Gr-205.
			2	ROOF SHEET FRONT	17	11318041	-	STL.SHEET	IS:5986,Gr-205.
			2	ROOF SHEET REAR	16	11318030	-	STL.SHEET	IS:5986,Gr-205.
			1	ROOF BACK L.H.	15	11318077	-	STL.SHEET	IS:5986,Gr-205.
			1	ROOF BACK R.H.	14	11318028	-	STL.SHEET	IS:5986,Gr-205.
			1	BACK SIDE L.H.	13	11318065	-	STL.SHEET	IS:5986,Gr-205.
			1	ROOF SIDE R.H.	12	11318016	-	STL.SHEET	IS:5986,Gr-205.
			2	ROOF STIFFENER FRONT (10X51X489 LG).	11	11125536	-	STL.PLATE	IS:2062,Gr-B
			3	ROOF STIFFENER	10	11318004	-	STL.PLATE	IS:2062,Gr-B
			3	ROOF STIFFENER	9	11317991	-	STL.PLATE	IS:2062,Gr-B
			1	TOP ANGLE ASSY.(L.H.)	8	11707707	-	-	-
			1	TOP ANGLE ASSY.(R.H.)	7	11707719	-	-	-
			2	STIFFENER (12X50X1810 LG).	6	11179820	-	STL.PLATE	IS:2062,Gr-B
			1	DOOR LATCH CATCH	5	11150970	-	-	-
			2	SIDE ANGLE (50X50X6X1860 LG).	4	11156880	-	STL.ANGLE	IS:2062,Gr-B
			1	BOTTOM ANGLE ASSY.(L.H.)	3	11707094	-	-	-
			1	BOTTOM ANGLE ASSY.(R.H.)	2	11707604	-	-	-
			1	BULK HEAD ARRGT	1	11707422	-	-	-
			NO.OFF	DESCRIPTION & DIMENSION	ITEM	PART NO.	Wt./UNIT	MATERIAL	SPECIFICATION

			2	UNION ELBOW 1"	59	11289259	-	-	TPL-0043
			1	PIPE 1" X 4 1/2" LG. ISO ONE END	58	11682553	-	-	-
			1	LONG COUPLING 1"	57	11325100	-	-	-
			1	PIPE 1" X 3"/ Lg. ISO ONE END	56	11682541	-	-	-
			1	GRATING	55	11700683	-	-	-
			4	NUT 3/8"-16	54	15396121	-	STEEL	IP65000-016
			2	STRIP (485 X 51 X 10 MM THK)	53	11319422	-	STEEL	IS:2062, Gr-B
			4	CLAMP	52	11698228	-	-	-
			1	PIPE NIPPLE 1" NB x3 1/2" LG.ISO 150 150	51	11297130	-	-	-
			1	TAPPING RAIL	50	11189496	-	-	-
			1	HAND RAIL REAR	49	11784908	-	-	-
			3	HAND RAIL SUPPORT	48	11125287	-	-	532V26487
			1	BRACKET	47	11644758	-	-	-
			1	BEND PIPE 1" NB	46	11659348	-	-	-
			1	HEAD LIGHT BRACKET ASSY.	45	11545823	-	-	-
			1	FILLER BULK HEAD(2206 X 32 X 3 MM THK)	44	11319392	-	-	IS:2062,Gr-B
			4	LIFTING PLATE	43	11638497	-	-	TPL-8852
			1	STIFFENER	42	11179831	-	-	TPL-0984
			4	LOCK WASHER 3/8"	41	15396125	-	STEEL	IP83504_016
			6	SPRING WASHER 5/8"	40	15396162	-	-	IP83504_020
			4	HEX.HD.BOLT 3/8"-16 X 1 1/2" LG.	39	15015130	-	STEEL	2P10023-048
			1	ANGLE	38	11319367	-	-	-
			1	LIFTING HOOK	37	11191200	-	-	-
			1	FAN FUNNEL ASSY.	36	11700695	-	-	-

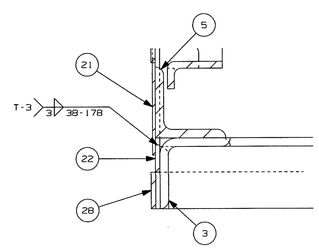

SECTION E-E

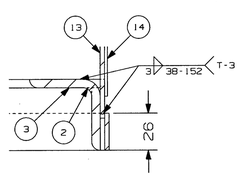

SECTION D-D

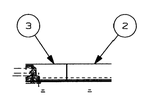

SECTION C-C

NOTE-

1. AFTER MANUFACTURING THE ASM, FROM IN SIDE SHALL BE PAINTED BY HR SUEDE GRAY ALKYD PAINT TO DLW SPEC.NO. MISC.-054.AND OUT SIDE SHOULD BE PAINTED WITH EPOXY ZINK PHOSPHATE PRIMER COATING(FOR P.U.PAINT) AS PER R.D.S.O. SPECIFICATION NO. M & P /PCN/100/2009.
2. SURFACE OF ASM SHOULD BE CLEANED PROPERLY BEFORE APLICATION OF EPOXY ZINC PHOSPHATE PRIMER.
3. ITEM NO.29 & 32 SHALL BE SUPPLIED IN SLIGHT TACK CONDITION SO THAT IT CAN BE DETACK EASILY AT THE TIME OF ASSY.

1. FROM IN SIDE OF STRUCTURE SHALL BE PAINTED BY HR SUEDE GRAY ALKYD PAINT TO DLW SPEC.NO. MISC.-054.AND OUT SIDE IS TO BE COATED BY PRIMER SUITABLE FOR ALKYD PAINT

THIS DRAWING IS A PROPERTY OF BLW/INDIAN RAILWAYS AND ANY UNAUTHORISED USE OF THE DRAWING WILL BE CONSIDERED ILLIGAL AND BLW/INDIAN RAILWAYS WILL HAVE RIGHT TO INITIATE LEGAL PROCEEDINGS AGAINST THE DEFAULTERS.

DY.CDE/VEH	ADE/BOGIE	/11011701 ASSLY. PART NO.
12/3/26	13/3/26	

ISSUING AUTHORITY : SSE/RECORDS
ALL DIMS. ARE IN mm.

TOLERANCES ON UNTOLERANCED DIMENSION TO IS:2102 (M)

WDM3A CONVERSION

GROUP :SUPERSTRUCTURE

RADIATOR COMPARTMENT

SUPERSEDED BY

SUPERSEDES

SCALE	SIZE	CHECKED BY SSE/VEH	
PROJECTION		DRAWN BY	
ALT.			

ब.रे.का. BANARAS LOCOMOTIVE WORKS VARANASI

PART NO. 11707410

SHEET 2 OF2

NX-TEAMCENTER

Signature Not Verified
Digitally signed by UMESH KUMAR TIWARI
Date: 2026.06.12 12:50:19 IST
Reason: RDSO
Document
Location: RDSO-CRIS