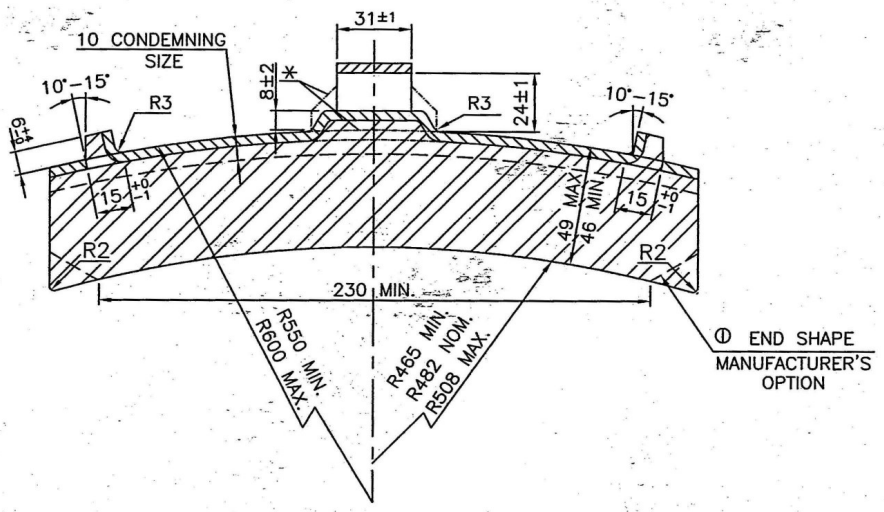

SECTION–AA

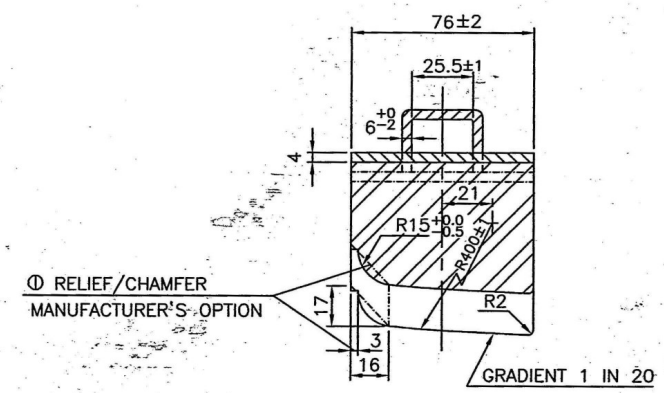

SECTION–BB

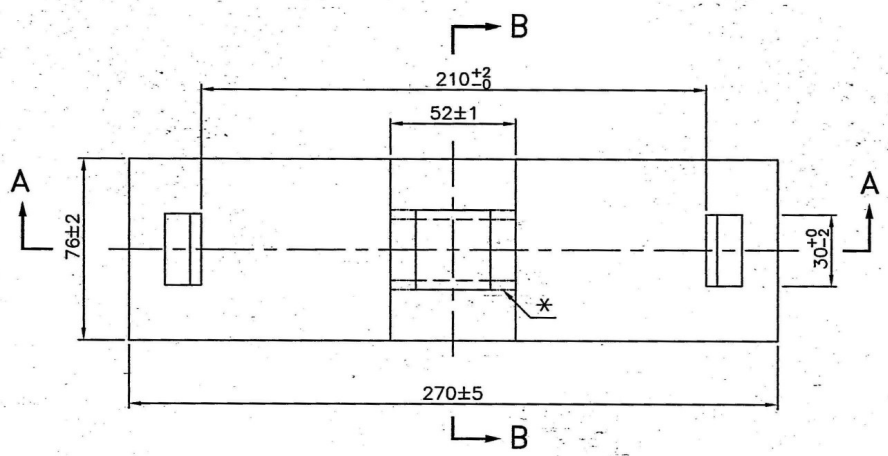

NOTE:–

1. THIS BRAKE BLOCK SUITS WHEEL WITH DIAMETER 915/813mm ON TREAD.
2. RDSO'S APPROVAL REQUIRED FOR NOTES MARKED THUS '①'.
3. CHARACTERISTICS OF BRAKE BLOCK SHALL BE AS PER RDSO SPECIFICATION C–9809 LATEST REVISION.
4. PORTION MARKED THUS '*' IS OPTIONAL FOR DESIGN OF BACK PLATE AND KEY CLAMP.
5. MANUFACTURER WILL SUBMIT THE DRAWING OF BACK PLATE & BRAKE BLOCK INCLUDING WEIGHT OF BRAKE BLOCK TO RDSO FOR APPROVAL.
6. MATERIAL SPECIFICATION & GRADE OF BACK PLATE TO BE SPECIFIED BY THE MANUFACTURER. ROLLING TOLERANCE ON THICKNESS OF BACK PLATE SHALL BE AS PER IS–1852.
7. ALL DIMENSIONS ARE IN mm.
8. UNDEFINED TOLERANCES ±1mm.

ITEM	DESCRIPTION & DIMENSIONS	No.OFF per Bogie	REF. DRG.	Wt.OF ONE (kg)	MATL. & SPEC.	REMARKS
1	'K'TYPE COMPOSITE BRAKE BLOCK	8			C–9809	

ALT.	ITEM	AUTHY.	DESCRIPTION	CKD.	DATE
6	1	SS/11/09	IS SPECIFICATION CORRECTED TO IS:1852 FROM IS:2102 UNDER NOTE–6 AND R2 ADDED IN END VIEW		05/09
5	1	SS/03/09	BRAKE BLOCK PROFILE MODIFIED NOTE–5 TO 8 ADDED TITLE BLOCK CHANGED		02/09
4	1	SS/25/03	DRG. REVISED & REDRAWN		07/03

ASSEMBLY DRGS.

REFERENCE:–

CHECK SHEET No.

SUPERSEDED BY:

SUPERSEDES: Alt. 5

SCALE 1:2

P
C
D
J.S. CD/20/98

B.G. R.D.S.O. [CG]

INDIAN RAILWAY STANDARDS

MAIN LINE COACHING STOCK WITH BOGIE MOUNTED BRAKE SYSTEM

DIMENSIONS OF NON ASBESTOS BASED 'K' TYPE HIGH FRICTION COMPOSITE BRAKE BLOCK

SKETCH–98066

"यह (आरेख) अनुसंधान अभिकल्प एवं मानक संगठन (रेल मंत्रालय) लखनऊ-226011, भारत के संपत्ति है और एतद् लिखित अनुमति के बिना इसका अंशिक या पूर्ण रूप से प्रयोग वर्जित है". ©