Signature Not Verified
Digitally signed by RAJIB DUTTA
Date: 2026.06.11 13:43:14 IST
Reason: IREPS Document
Location: IREPS-CRIS

50/ 13 /2026/O/o Dy.CEE/DKAE/CLW

DIMENSIONS ARE IN mm
METRIC PRECISION HEXAGON HEAD BOLT

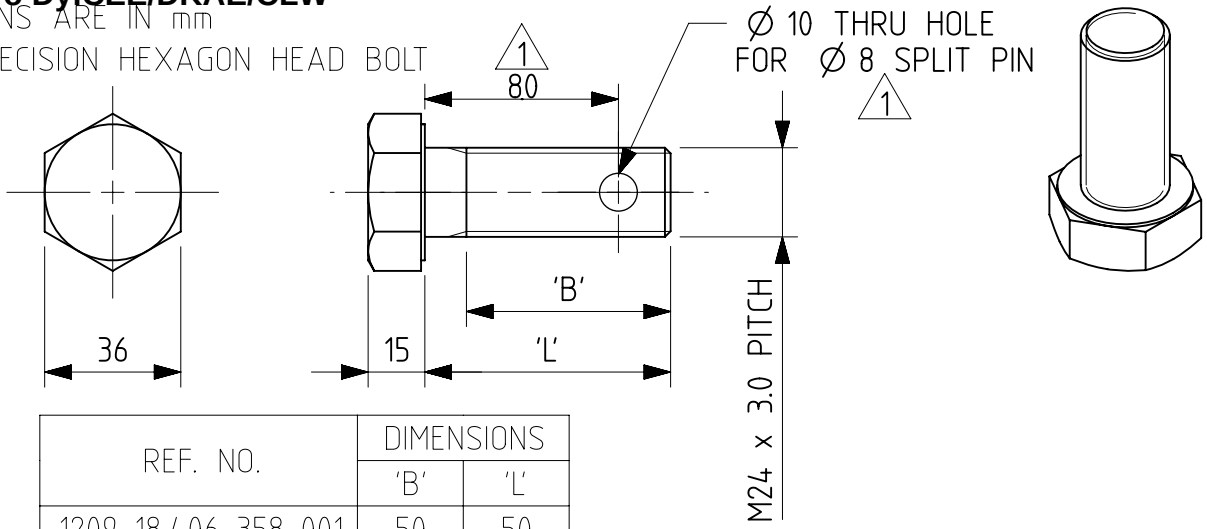

REF. NO.	DIMENSIONS	
	'B'	'L'
1209-18.406-358-001	50	50
1209-18.406-358-002	54	55
1209-18.406-358-003	54	60
1209-18.406-358-004	54	65
1209-18.406-358-005	54	70
1209-18.406-358-006	54	75
1209-18.406-358-007	54	80
1209-18.406-358-008	54	85
1209-18.406-358-009	54	90
1209-18.406-358-010	54	100
1209-18.406-358-011	54	110
1209-18.406-358-012	54	120
1209-18.406-358-013	60	130
1209-18.406-358-014	60	140
1209-18.406-358-015	60	150
1209-18.406-358-016	60	160
1209-18.406-358-017	60	180
1209-18.406-358-018	73	200
1209-18.406-358-019	73	220
1209-18.406-358-020	73	240
1209-18.406-358-021	73	250
1209-18.406-358-022	73	260
1209-18.406-358-023	73	280
1209-18.406-358-024	73	300

1
NOTE: ∅ 10 THRU HOLE ADDED AT REF.NO. 1209-18.406-358-009 (C&D NO. T320/072) ONLY FOR 2 NOS./WAG-9HC LOCO

परिवर्तन संख्या ALT.NO.	प्राधिकार AUTHY	वर्णन DESCRIPTION	दिनांकित आद्यक्षर DATED INITIAL
1	DY.CEE/D-II	∅ 10 THRU HOLE ADDED AT REF.NO. 1209-18.406-358-009. NOTE ADDED	18-03-24

सतह – रुक्षता का मान भा. मा. 3073 / अ. मा. सं. 1302 SURFACE ROUGHNESS VALUE TO IS:3073 / ISO:1302

अनिर्दिष्ट सह्य – सीमा भा. मा. : 2102 / अ. मा. सं. : 2768 UNSPECIFIED TOLEARANCE TO IS : 2102 / ISO : 2768

धातु–वेल्डन चिन्ह भा. मा. : 813 / अ. मा. सं. :2553 WELDING SYMBOLS TO IS:813 / ISO:2553

TOL. CLS.

पदांक GRADE NO.	सं1 N1	सं2 N2	सं3 N3	सं4 N4	सं5 N5	सं6 N6	सं7 N7	सं8 N8	सं9 N9	सं10 N10	सं11 N11	सं12 N12
Rz	0.16-0.3	0.5-0.7	0.9-1.1	1.5-2.0	2.5-3.8	5.0-6.3	9.0-12	16-25	30-40	50-63	75-100	160-250
Ra μm	0.025	0.05	0.1	0.2	0.4	0.8	1.6	3.2	6.3	12.5	25	50
चिन्ह SYMBOL												

अभिकल्पित DGN	
जाँचा व.अ.अ. CHD SSE	RAJEEV KUMAR (Digitally signed by RAJEEV KUMAR Date: 2024.03.18 13:35:17 +05'30')
समीक्षित स.वि.अ. / व.वि.अ. REVIEWED AEE / SEE	
अनुमोदित उ.मु.वि.अ. APPROVED DYCEE	AMIT AGGARWAL (Digitally signed by AMIT AGGARWAL Date: 2024.03.18 16:31:29 +05'30')
दिनांक DATE	18-03-24
रैखिक अनुपात SCALE	1:1
संदर्भ / REF.	182-00018 ALT.- 1

चित्तरंजन रेलइंजन कारखाना
CHITTARANJAN LOCOMOTIVE WORKS, INDIA

पदार्थ MATL	STEEL
प्रति भार कि. ग्रा. WT. EACH IN KG	
विशिष्टि SPECN	IS:1364, PT-2, CLASS- 8.8
वर्णन DESCRIPTION	BOLT HEX M24x3 Zn Pl. (Pass.)
आरेखण संख्या DRAWING NO.	1209-18.406-358
परिवर्तन संख्या ALTERATION. NO.	1
पर्ण SHEET	1 OF 1
	A4

This document/drawing was prepared by or on behalf of CLW and the copyright belongs to CLW. Reproduction in whole or in part requires prior written consent of CLW. As the drawing incorporates confidential information of CLW its disclosure to third parties also requires CLW's prior written consent.

REDRAWN BY COE

5033136/2026/O/o Dy.CEE/DKAE/CLW

ALL DIMENSIONS IN mm UNLESS OTHERWISE SPECIFIED
ISO METRIC PERCISION HEXAGON NUT

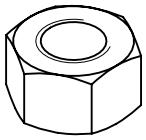

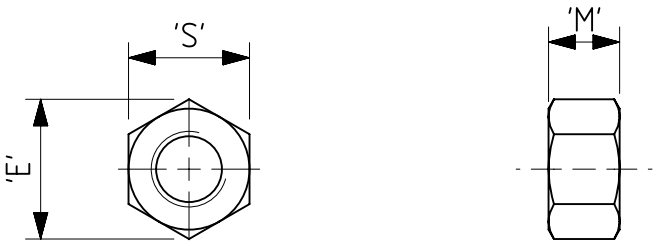

REF. NO.	NOMINAL DIA. (D)	PITCH OF THREAD	DIMENSIONS		
			'S'	'M'	'E'
1209-18.406-382-001	M5	0.8	8.0	4.7	8.79
1209-18.406-382-002	M6	1.0	10.0	5.2	11.05
1209-18.406-382-003	M8	1.25	13.0	6.8	14.38
1209-18.406-382-004	M10	1.5	16.0	8.4	17.77
1209-18.406-382-005	M12	1.75	18.0	10.8	20.03
1209-18.406-382-006	M16	2.0	24.0	14.8	26.75
1209-18.406-382-007	M20	2.5	30.0	18.0	32.95
1209-18.406-382-008	M24	3.0	36.0	21.5	39.55
1209-18.406-382-009	M30	3.5	46.0	25.6	50.85
1209-18.406-382-010	M36	4.0	55.0	31.0	60.79
1209-18.406-382-011	M4				
1209-18.406-382-012	M3				
1209-18.406-382-013	M2.5				

परिवर्तन संख्या ALT.NO.	प्राधिकार AUTHY	वर्णन DESCRIPTION	दिनांकित आद्यक्षर DATED INITIAL
0			

सतह – रुक्षता का मान भा. मा. 3073 / अ. मा. सं. 1302
SURFACE ROUGHNESS VALUE TO IS:3073 / ISO:1302

अनिर्दिष्ट सह्य – सीमा भा. मा. : 2102 / अ. मा. सं. : 2768
UNSPECIFIED TOLEARANCE TO IS : 2102 / ISO : 2768

धातु–वेल्डन चिन्ह भा. मा. : 813 / अ. मा. सं. :2553
WELDING SYMBOLS TO IS:813 / ISO:2553

TOL. CLS.

पदांक GRADE NO.	सं1 N1	सं2 N2	सं3 N3	सं4 N4	सं5 N5	सं6 N6	सं7 N7	सं8 N8	सं9 N9	सं10 N10	सं11 N11	सं12 N12
Rz	0.16-0.3	0.5-0.7	0.9-1.1	1.5-2.0	2.5-3.8	5.0-6.3	9.0-12	16-25	30-40	50-63	75-100	160-250
Ra μm	0.025	0.05	0.1	0.2	0.4	0.8	1.6	3.2	6.3	12.5	25	50
चिन्ह SYMBOL												

अभिकल्पित DGN	
जॉचा व.अ.अ. CHD SSE	RAJEEV KUMAR Digitally signed by RAJEEV KUMAR Date: 2021.12.23 17:38:38 +05'30'
समीक्षित स.वि.अ. / व.वि.अ. REVIEWED AEE / SEE	Pradeep Khatana Digitally signed by Pradeep Khatana Date: 2021.12.23 18:54:11 +05'30'
अनुमोदित उ.मु.वि.अ. APPROVED DYCEE	SYAMA PRASAD PATRA Digitally signed by SYAMA PRASAD PATRA Date: 2022.01.25 15:56:59 +05'30'
दिनांक DATE	13-11-20
रैखिक अनुपात SCALE	1:1
संदर्भ / REF.	182-00037 ALT.-2

चित्तरंजन रेलइंजन कारखाना
CHITTARANJAN LOCOMOTIVE WORKS, INDIA

पदार्थ MATL	STEEL	प्रति भार कि. ग्रा. WT. EACH IN KG	
विशिष्टि SPECN	IS:1364, PT-3		
वर्णन DESCRIPTION	NUT HEX ZN PL. (PASS.)		
आरेखण संख्या DRAWING NO.	1209-18.406-382		
परिवर्तन संख्या ALTERATION. NO.	0	पर्ण SHEET 1 OF 1	A4

This document/drawing was prepared by or on behalf of CLW and the copyright belongs to CLW. Reproduction in whole or in part requires prior written consent of CLW. As the drawing incorporates confidential information of CLW its disclosure to third parties also requires CLW's prior written consent.

REDRAWN BY TCS

5033136/2026/O/o Dy.CEE/DKAE/CLW

SURFACE ROUGHNESS Ra VALUES in µm

ALL DIMENSIONS ARE IN mm.

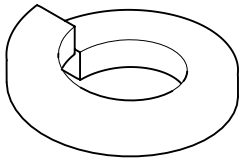

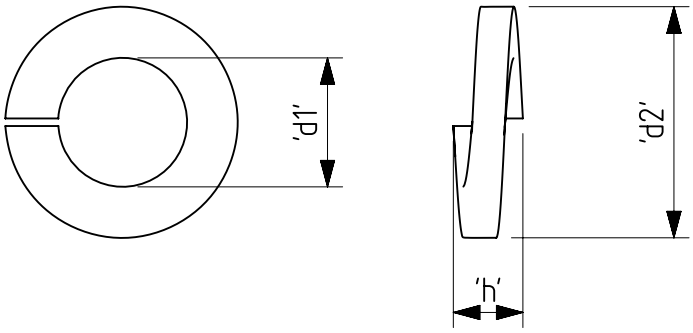

PART DRG. NO.	NOM. SIZE (BOLT DIA)	DIMENSIONS			SECTION THICKNESS
		'd1'	'd2'	'h'	
1209-18.406-488-001	3	3.4	6.2	1.84	0.90
1209-18.406-488-002	4	4.4	7.6	2.07	1.00
1209-18.406-488-003	5	5.4	9.2	2.76	1.30
1209-18.406-488-004	6	6.5	11.8	3.68	1.70
1209-18.406-488-005	8	8.6	14.9	4.60	2.10
1209-18.406-488-006	10	10.7	18.1	5.06	2.35
1209-18.406-488-007	12	12.7	21.1	5.75	2.65
1209-18.406-488-008	14	14.7	24.1	6.90	3.15
1209-18.406-488-009	16	17.0	27.4	8.05	3.70
1209-18.406-488-010	20	21.2	33.6	9.20	4.20
1209-18.406-488-011	24	25.5	40.0	11.50	5.20

परिवर्तन संख्या ALT.NO.	प्राधिकार AUTHY	वर्णन DESCRIPTION	दिनांकित आद्यक्षर DATED INITIAL

सतह – रुक्षता का मान भा. मा. 3073 / अ. मा. सं. 1302 SURFACE ROUGHNESS VALUE TO IS:3073 / ISO:1302	अनिर्दिष्ट सह्य – सीमा भा. मा. : 2102 / अ. मा. सं. : 2768 UNSPECIFIED TOLEARANCE TO IS : 2102 / ISO : 2768	TOL. CLS.
	धातु–वेल्डन चिन्ह भा. मा. : 813 / अ. मा. सं. :2553 WELDING SYMBOLS TO IS:813 / ISO:2553	

पदांक GRADE NO.	सं1 N1	सं2 N2	सं3 N3	सं4 N4	सं5 N5	सं6 N6	सं7 N7	सं8 N8	सं9 N9	सं10 N10	सं11 N11	सं12 N12
Rz	0.16-0.3	0.5-0.7	0.9-1.1	1.5-2.0	2.5-3.8	5.0-6.3	9.0-12	16-25	30-40	50-63	75-100	160-250
Ra µm	0.025	0.05	0.1	0.2	0.4	0.8	1.6	3.2	6.3	12.5	25	50
चिन्ह SYMBOL												

अभिकल्पित DGN	
जाँचा व.अ.अ. CHD SSE	
समीक्षित स.वि.अ. / व.वि.अ. REVIEWED AEE / SEE	
अनुमोदित उ.मु.वि.अ. APPROVED DYCEE	
दिनांक DATE	03-08-23
रैखिक अनुपात SCALE	1:1
संदर्भ / REF. 182-00045	ALT.-

चित्तरंजन रेलइंजन कारखाना
CHITTARANJAN LOCOMOTIVE WORKS, INDIA

पदार्थ MATL	STEEL (Zn. Pass.)
प्रति भार कि. ग्रा. WT. EACH IN KG	
विशिष्टि SPECN	IS: 3063
वर्णन DESCRIPTION	WASHER HELICAL SPRING LOCK Zn Pl(Pass.)
आरेखण संख्या DRAWING NO.	1209-18.406-488
परिवर्तन संख्या ALTERATION. NO.	
पर्ण SHEET	1 OF 1
	A4

This document/drawing was prepared by or on behalf of CLW and the copyright belongs to CLW. Reproduction in whole or in part requires prior written consent of CLW. As the drawing incorporates confidential information of CLW its disclosure to third parties also requires CLW's prior written consent.

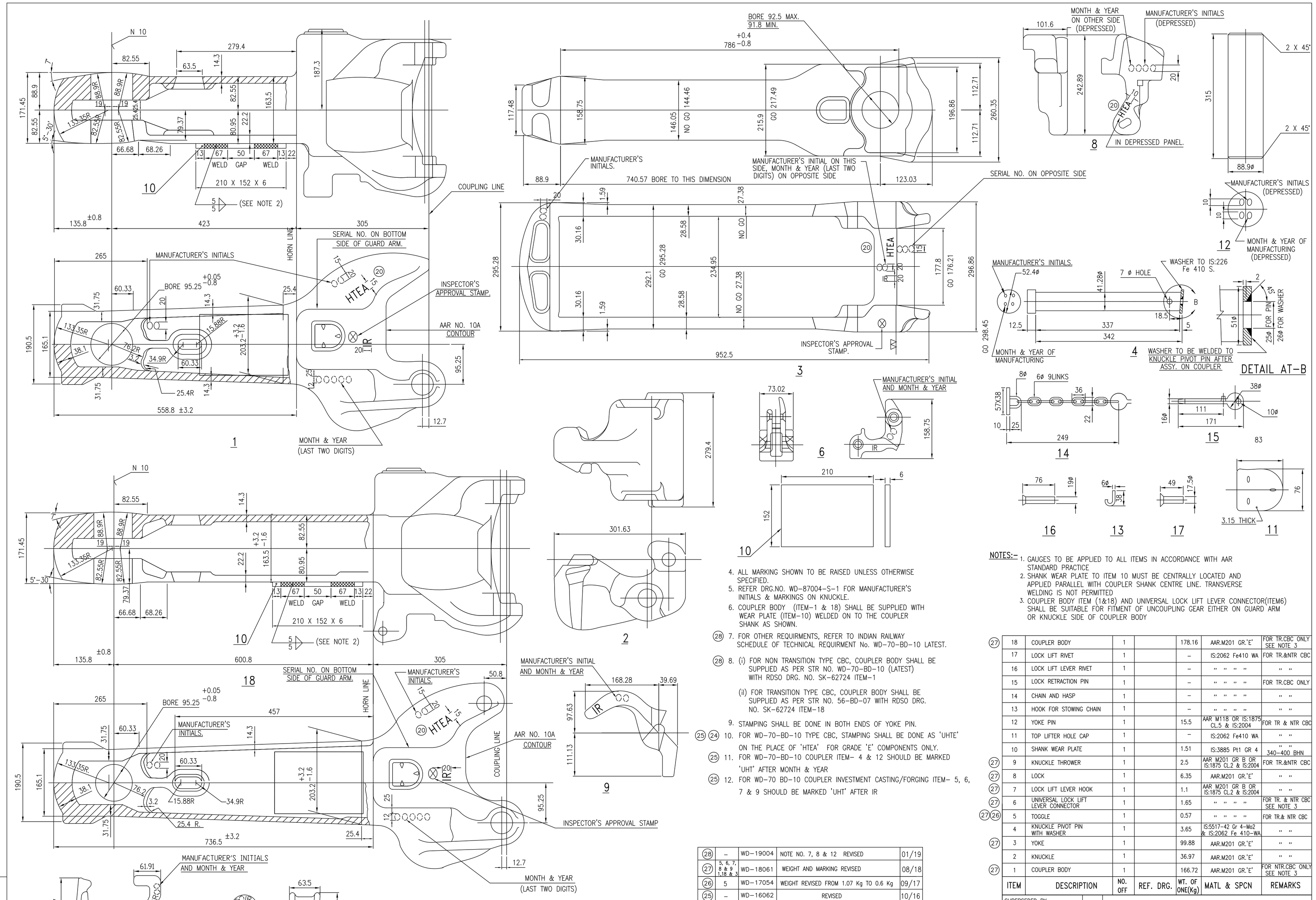

4. ALL MARKING SHOWN TO BE RAISED UNLESS OTHERWISE SPECIFIED.
5. REFER DRG.NO. WD-87004-S-1 FOR MANUFACTURER'S INITIALS & MARKINGS ON KNUCKLE.
6. COUPLER BODY (ITEM-1 & 18) SHALL BE SUPPLIED WITH WEAR PLATE (ITEM-10) WELDED ON TO THE COUPLER SHANK AS SHOWN.

(28) 7. FOR OTHER REQUIRMENTS, REFER TO INDIAN RAILWAY SCHEDULE OF TECHNICAL REQUIRMENT No. WD-70-BD-10 LATEST.

(28) 8. (i) FOR NON TRANSITION TYPE CBC, COUPLER BODY SHALL BE SUPPLIED AS PER STR NO. WD-70-BD-10 (LATEST) WITH RDSO DRG. NO. SK-62724 ITEM-1

(ii) FOR TRANSITION TYPE CBC, COUPLER BODY SHALL BE SUPPLIED AS PER STR NO. 56-BD-07 WITH RDSO DRG. NO. SK-62724 ITEM-18

9. STAMPING SHALL BE DONE IN BOTH ENDS OF YOKE PIN.

(25) (24) 10. FOR WD-70-BD-10 TYPE CBC, STAMPING SHALL BE DONE AS 'UHTE' ON THE PLACE OF 'HTEA' FOR GRADE 'E' COMPONENTS ONLY.

(25) 11. FOR WD-70-BD-10 COUPLER ITEM- 4 & 12 SHOULD BE MARKED 'UHT' AFTER MONTH & YEAR

(25) 12. FOR WD-70 BD-10 COUPLER INVESTMENT CASTING/FORGING ITEM- 5, 6, 7 & 9 SHOULD BE MARKED 'UHT' AFTER IR

NOTES:-

1. GAUGES TO BE APPLIED TO ALL ITEMS IN ACCORDANCE WITH AAR STANDARD PRACTICE
2. SHANK WEAR PLATE TO ITEM 10 MUST BE CENTRALLY LOCATED AND APPLIED PARALLEL WITH COUPLER SHANK CENTRE LINE. TRANSVERSE WELDING IS NOT PERMITTED
3. COUPLER BODY ITEM (1&18) AND UNIVERSAL LOCK LIFT LEVER CONNECTOR(ITEM6) SHALL BE SUITABLE FOR FITMENT OF UNCOUPLING GEAR EITHER ON GUARD ARM OR KNUCKLE SIDE OF COUPLER BODY

	ITEM	DESCRIPTION	NO. OFF	REF. DRG.	WT. OF ONE(Kg)	MATL & SPCN	REMARKS
(27)	18	COUPLER BODY	1		178.16	AAR.M201 GR.'E'	FOR TR.CBC ONLY SEE NOTE 3
	17	LOCK LIFT RIVET	1		–	IS:2062 Fe410 WA	FOR TR.&NTR CBC
	16	LOCK LIFT LEVER RIVET	1		–	" " " "	" "
	15	LOCK RETRACTION PIN	1		–	" " " "	FOR TR.CBC ONLY
	14	CHAIN AND HASP	1		–	" " " "	" "
	13	HOOK FOR STOWING CHAIN	1		–	" " " "	" "
	12	YOKE PIN	1		15.5	AAR M118 OR IS:1875 CL.5 & IS:2004	FOR TR & NTR CBC
	11	TOP LIFTER HOLE CAP	1		–	IS:2062 Fe410 WA	" "
	10	SHANK WEAR PLATE	1		1.51	IS:3885 Pt1 GR 4	" " 340-400 BHN
(27)	9	KNUCKLE THROWER	1		2.5	AAR M201 GR B OR IS:1875 CL.2 & IS:2004	FOR TR.&NTR CBC
(27)	8	LOCK	1		6.35	AAR.M201 GR.'E'	" "
(27)	7	LOCK LIFT LEVER HOOK	1		1.1	AAR M201 GR B OR IS:1875 CL.2 & IS:2004	" "
(27)	6	UNIVERSAL LOCK LIFT LEVER CONNECTOR	1		1.65	" " " "	FOR TR. & NTR CBC SEE NOTE 3
(27)(26)	5	TOGGLE	1		0.57	" " " "	FOR TR.& NTR CBC
	4	KNUCKLE PIVOT PIN WITH WASHER	1		3.65	IS:5517-42 Gr 4-Mo2 & IS:2062 Fe 410-WA	" "
(27)	3	YOKE	1		99.88	AAR.M201 GR.'E'	" "
	2	KNUCKLE	1		36.97	AAR.M201 GR.'E'	" "
(27)	1	COUPLER BODY	1		166.72	AAR.M201 GR.'E'	FOR NTR.CBC ONLY SEE NOTE 3

(28)	–	WD-19004	NOTE NO. 7, 8 & 12 REVISED	01/19	
(27)	5, 6, 7, 8 & 9 1,18 & 3	WD-18061	WEIGHT AND MARKING REVISED	08/18	
(26)	5	WD-17054	WEIGHT REVISED FROM 1.07 Kg TO 0.6 Kg	09/17	
(25)	–	WD-16062	REVISED	10/16	
(24)	–	WD-16036	REVISED	06/16	
(23)	–	WD-10093	REVISED	12/10	
(22)	–	WD-09083	NOTE NO. 8 ADDED	09/09	
(21)	–	WD-08091	REVISED	10/08	WD-81010-S-03
(20)	–	WD-07031	MARKING CHANGED FROM 'HTE' TO 'HTEA'	05/07	SK-62720
(19)	–	WD-04054	REVISED	07/04	SK-62723
ALT	ITEM	AUTHY	DESCRIPTIONS	DATE	ASSLY. DRG

Gr. NO.	N1	N2	N3	N4	N5	N6	N7	N8	N9	N10	N11	N12
Ra µm.	0.025	0.05	0.1	0.2	0.4	0.8	1.6	3.2	6.3	12.5	25	50
SYMBOL	▽▽▽▽			▽▽▽			▽▽			▽		~

SURFACE ROUGHNESS VALUE TO IS:3073.

SUPERSEDED BY			
SUPERSEDES			DATE
SCALE	PASSED	KATHURIA	07/84
	CHECKED	RAGHU	07/84
	DRAWN	CHOPRA	03/84
	TRACED	S.PURI	08/01
	J.S.NO.		

CENTRE BUFFER COUPLER FOR BOGIE WAGONS

DETAILS FOR TRANSITION AND NON-TRANSITION C.B.C.

B.G. | R.D.S.O. [W] | GROUP | SK.62724

COMP. BY	SIG.	DATE

5033136/2026/O/o Dy.CEE/DKAE/CLW