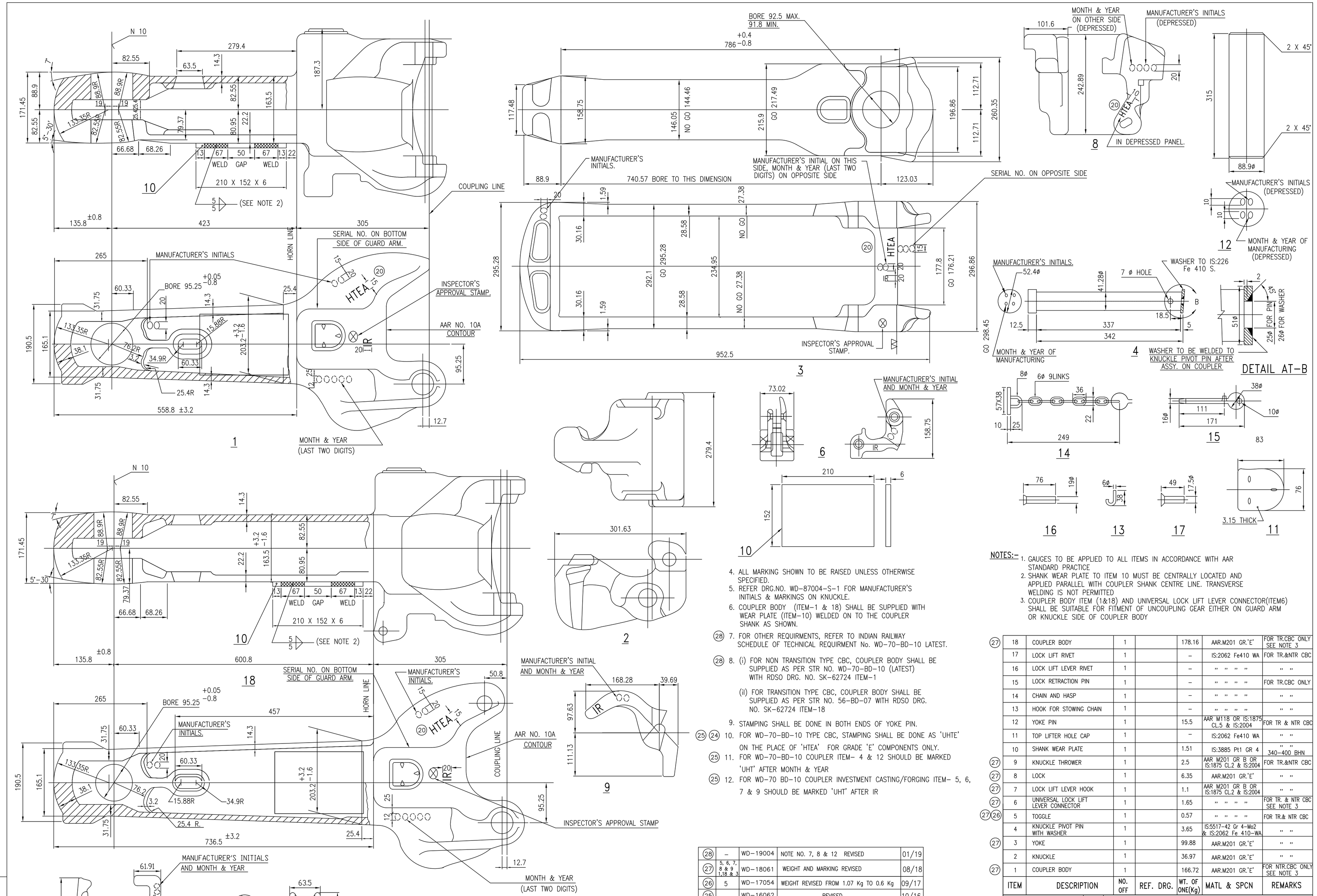

4. ALL MARKING SHOWN TO BE RAISED UNLESS OTHERWISE SPECIFIED.
5. REFER DRG.NO. WD-87004-S-1 FOR MANUFACTURER'S INITIALS & MARKINGS ON KNUCKLE.
6. COUPLER BODY (ITEM-1 & 18) SHALL BE SUPPLIED WITH WEAR PLATE (ITEM-10) WELDED ON TO THE COUPLER SHANK AS SHOWN.

(28) 7. FOR OTHER REQUIRMENTS, REFER TO INDIAN RAILWAY SCHEDULE OF TECHNICAL REQUIRMENT No. WD-70-BD-10 LATEST.

(28) 8. (i) FOR NON TRANSITION TYPE CBC, COUPLER BODY SHALL BE SUPPLIED AS PER STR NO. WD-70-BD-10 (LATEST) WITH RDSO DRG. NO. SK-62724 ITEM-1

(ii) FOR TRANSITION TYPE CBC, COUPLER BODY SHALL BE SUPPLIED AS PER STR NO. 56-BD-07 WITH RDSO DRG. NO. SK-62724 ITEM-18

9. STAMPING SHALL BE DONE IN BOTH ENDS OF YOKE PIN.

(25) (24) 10. FOR WD-70-BD-10 TYPE CBC, STAMPING SHALL BE DONE AS 'UHTE' ON THE PLACE OF 'HTEA' FOR GRADE 'E' COMPONENTS ONLY.

(25) 11. FOR WD-70-BD-10 COUPLER ITEM- 4 & 12 SHOULD BE MARKED 'UHT' AFTER MONTH & YEAR

(25) 12. FOR WD-70 BD-10 COUPLER INVESTMENT CASTING/FORGING ITEM- 5, 6, 7 & 9 SHOULD BE MARKED 'UHT' AFTER IR

NOTES:-
1. GAUGES TO BE APPLIED TO ALL ITEMS IN ACCORDANCE WITH AAR STANDARD PRACTICE
2. SHANK WEAR PLATE TO ITEM 10 MUST BE CENTRALLY LOCATED AND APPLIED PARALLEL WITH COUPLER SHANK CENTRE LINE. TRANSVERSE WELDING IS NOT PERMITTED
3. COUPLER BODY ITEM (1&18) AND UNIVERSAL LOCK LIFT LEVER CONNECTOR(ITEM6) SHALL BE SUITABLE FOR FITMENT OF UNCOUPLING GEAR EITHER ON GUARD ARM OR KNUCKLE SIDE OF COUPLER BODY

	ITEM	DESCRIPTION	NO. OFF	REF. DRG.	WT. OF ONE(Kg)	MATL & SPCN	REMARKS
(27)	18	COUPLER BODY	1		178.16	AAR.M201 GR.'E'	FOR TR.CBC ONLY SEE NOTE 3
	17	LOCK LIFT RIVET	1		–	IS:2062 Fe410 WA	FOR TR.&NTR CBC
	16	LOCK LIFT LEVER RIVET	1		–	" " " "	" "
	15	LOCK RETRACTION PIN	1		–	" " " "	FOR TR.CBC ONLY
	14	CHAIN AND HASP	1		–	" " " "	" "
	13	HOOK FOR STOWING CHAIN	1		–	" " " "	" "
	12	YOKE PIN	1		15.5	AAR M118 OR IS:1875 CL.5 & IS:2004	FOR TR & NTR CBC
	11	TOP LIFTER HOLE CAP	1		–	IS:2062 Fe410 WA	" "
	10	SHANK WEAR PLATE	1		1.51	IS:3885 Pt1 GR 4	" " 340-400 BHN
(27)	9	KNUCKLE THROWER	1		2.5	AAR M201 GR B OR IS:1875 CL.2 & IS:2004	FOR TR.&NTR CBC
(27)	8	LOCK	1		6.35	AAR.M201 GR.'E'	" "
(27)	7	LOCK LIFT LEVER HOOK	1		1.1	AAR M201 GR B OR IS:1875 CL.2 & IS:2004	" "
(27)	6	UNIVERSAL LOCK LIFT LEVER CONNECTOR	1		1.65	" " " "	FOR TR. & NTR CBC SEE NOTE 3
(27)(26)	5	TOGGLE	1		0.57	" " " "	FOR TR.& NTR CBC
	4	KNUCKLE PIVOT PIN WITH WASHER	1		3.65	IS:5517-42 Gr 4-Mo2 & IS:2062 Fe 410-WA	" "
(27)	3	YOKE	1		99.88	AAR.M201 GR.'E'	" "
	2	KNUCKLE	1		36.97	AAR.M201 GR.'E'	" "
(27)	1	COUPLER BODY	1		166.72	AAR.M201 GR.'E'	FOR NTR.CBC ONLY SEE NOTE 3

(28)	–	WD-19004	NOTE NO. 7, 8 & 12 REVISED	01/19	
(27)	5, 6, 7, 8 & 9 1,18 & 3	WD-18061	WEIGHT AND MARKING REVISED	08/18	
(26)	5	WD-17054	WEIGHT REVISED FROM 1.07 Kg TO 0.6 Kg	09/17	
(25)	–	WD-16062	REVISED	10/16	
(24)	–	WD-16036	REVISED	06/16	
(23)	–	WD-10093	REVISED	12/10	
(22)	–	WD-09083	NOTE NO. 8 ADDED	09/09	
(21)	–	WD-08091	REVISED	10/08	WD-81010-S-03
(20)	–	WD-07031	MARKING CHANGED FROM 'HTE' TO 'HTEA'	05/07	SK-62720
(19)	–	WD-04054	REVISED	07/04	SK-62723
ALT	ITEM	AUTHY	DESCRIPTION	DATE	ASSLY. DRG

Gr. NO.	N1	N2	N3	N4	N5	N6	N7	N8	N9	N10	N11	N12
Ra µm.	0.025	0.05	0.1	0.2	0.4	0.8	1.6	3.2	6.3	12.5	25	50
SYMBOL	▽▽▽▽			▽▽▽			▽▽			▽		~

SURFACE ROUGHNESS VALUE TO IS:3073.

Signature Not Verified
Digitally signed by
Date: 2026.01.16
11:10:04 IST
Reason: INFORMATICS
Location: INFRES-CORE

SUPERSEDED BY	
SUPERSEDES	DATE
SCALE	

PASSED	KATHURIA	07/84	
CHECKED	RAGHU	07/84	
DRAWN	CHOPRA	03/84	
TRACED	S.PURI	08/01	
J.S.NO.			

CENTRE BUFFER COUPLER FOR BOGIE WAGONS

DETAILS FOR TRANSITION AND NON-TRANSITION C.B.C.

B.G. | R.D.S.O. [W] | GROUP | SK.62724

DATE	
SIG.	
COMP. BY	