SPECIAL TERMS AND CONDITIONS

Name of Work: As per Tender Notice.

This tender is prepared with IRUSSOR 2021 and DSR 2023 Vol -I, II therefore the bidders should read the each and every items carefully before quoting the rates. All the specifications are as per the Specification and the special condition of contract and Central Public Works Department, Government of India, Specifications- Volume- I and II, Specifications for Horticulture and Landscaping and Indian Railway Unified Standard Specifications (Formation Works, Bridge works and P. Way works) of 2021 along with the latest amendments and work is to be carried out as per all the policy and day to day policy circulars.

Scope of Work:

{ITEMWISE AND SCHEDULE WISE SPECIAL CONDITIONS AND SPECIFICATIONS)

Contractor should read carefully the following scope of work and special conditions before quoting the rates.

Scope of work:

1. Development of design and drawing for RCC Box with junction arrangement dully observing versos IRS, BIS, IRC codes.
2. Proof checking of designs by reputed government institutes e.g. IIT, NIT etc.
3. Approval of design and drawings from Railway authorities.
4. Cutting of existing embankment to required profile.
5. Development of suitable hydraulic jacks of adequate capacity and other arrangements for pushing of box at a good pace.
6. Development of casting cum thrust bed, end frame /cutting shields as per approved scheme of casting and pushing site condition etc.
7. Casting of RCC boxes on casting as per approved scheme. This includes all arrangement for casting e.g. supply of materials (Cement, steel aggregates.), steel shuttering, batching plants, vibrators, power supply arrangement. Cutting bending and binding of reinforcement as per approved drawing, development & approval of design mix, curing etc.
8. Pushing of boxes in to Railway embankment under the running traffic condition under suitable speed restriction & track protection.
9. Excavation and taking out earth from inside the box to facilitate box pushing. (use of mechanical equipments shall be preferred for this purpose.)
10. Maintenance protection and rectification of track pushing operation to ensure safe & smooth passage of railway traffic.
11. Provision of wearing course inside the box.
12. Provision of protection wall.
13. Finishing work e.g. painting, bridge tablets, parapet wall, bank protection, turfing etc.
14. Development of design, drawing and obtaining approval of railway authorities for providing architectural effects on both the faces of box and parapet.
15. The work of Schedule DSR items will be done as per "GOVERNMENT OF INDIA, CENTRAL PUBLIC WORKS DEPARTMENT {CPWD) Specifications (Vol.1 & Vol.2)-2021".
16. The work of Schedule IRUSSOR will be done as per Indian Railways Unified Standard Specification-2021 (Formation Works, Bridge Works and P. Way Works).
17. In case of any disputes/doubts in between Approved plan / Schedule items / Special condition or GCC, the decision of concern Sr. DEN/ DEN of Division office Shall final and bounding to contractor.

A: Casting and jacking of precast RCC box:

1. This item is for casting of RCC Box (As per Design Mix) as per the Railway's drawing and providing the same under running railway tracks by box pushing method to collect level and alignment. All necessary arrangements of plants, equipments as required shall be made by the tenderer/s.

Signature Not Verified
Digitally signed by BIJENDRA KUMAR MEENA
Date: 2026.06.30 15:56:38 IST
Reason: IREPS-CRIS
Location: New Delhi

2. The rate also includes collecting necessary soil data testing the same for design of temporary work/thrust bed /box pushing, nothing extra shall be payable on this account beyond the rate quoted in the tender against this items.
3. The rate includes casting of thrust bed as per USSOR item including its foundation as approved by Engineer In-charge. It also includes manufacturing and fabrication of front end frame /cutting shield /any other special strengthening and modification required to the shield as per the requirement of site conditions along with intermediate jacking stations required.
4. The contractor is required to get the structural designs and drawings developed for RCC thrust bed by reputed consultant or agency. The consultant should have good experience of railway bridges. His design should have been used at least one such bridge.

   The contractor should work with pushing methodology etc. based on the railway's General Arrangement drawing (GAD) with suitable junction arrangement, jack in points.

   The contractor shall get the design and drawing proof checked by any reputed government institutes e.g. IIT, NIT etc.

   The above design and drawing and dully proof checked shall be submitted to the railway for approval within one month's from the date of issue LOA.
5. Approval of design and drawing shall be the responsibility of Railway. However, the contractor will also associate himself with the approval process and will take prompt action to finish clarifications, additional information compliance to observation etc. as per direction of Engineer in charge.
6. Initially the contractor shall submit 03 copies of drawings (01 on good quality tracing paper and 02 ammonia prints) along with complete design to the railways for scrutiny.
7. After scrutiny Railway may suggest certain modifications and the contractor shall submit final copy of drawing (on good quality tracing paper) and design duly incorporating all the corrections/ modifications suggested by Railways.
8. On receipt of final approved drawing the contractor shall submit to the Railway 01 RTF print and 12 ammonia print along with original tracing of the approved drawing. Similarly he will also submit 03 copies of approved design.
9. The cost of development, proof checking, coping /printing etc. with all other associate work is included in the rate quoted by the contractor and no extra payment shall be made on this account.
10. The contractor shall submit the GAD of the casting cum thrust bed be tilling with the casting scheme of boxes for approval. To the railway within 15 days from the date of issue of LOA. On the receipt of approved GAD the contractor shall make immediately arrangements for development of structure design of casting cum thrust bed as per approved GAD and take up the work of preparation of casting cum thrust bed. Structure design of the casting cum thrust bed as per approved GAD and scheme is the sole responsibility of the contractor. The cost of which is included in the rate quoted by the contractor.
11. Contractor shall arrange for development of designs and drawings for providing suitable architectural effects on both the faces of the box and parapet. The cost of this designs and drawings are included in the quoted and nothing extra shall be paid on this account.
12. Railway shall have full ownership and copyright of designs and drawings developed in connection with subject work.
13. Before taking up the work of provision of casting –cum-thrust bed, the existing embankment shall be cut to proper slope as per approved GAD for which payment shall be made under relevant items of schedule.
14. Earthwork in excavation for construction of thrust bed for box pushing including shoring or any other arrangement required to protect the earth slopes from sides of Railway embankment to the satisfaction of Engineer in charge and disposal of excavated earth in the nearby available Railway land within

maximum lead of 1 Km the disposable earth may be utilized to fill borrow pas/widen the Railway embankment or to develop the circulating area.

15. The alignment of the casting-cum-thrust bed shall be commensurate with the proposed alignment of the box and shall be finalized in consultation with the Railway.
16. The casting-cum-thrust bed has important role to play in the process of box pushing hence utmost quality control and dimensional accuracy must be ensured during its casting as per GAD approved by Railway and per contractor's structural design.

B: Casting of RCC boxes:

1. RCC Box is to be in number of segments as indicated in approved GAD in consultation with the Engineer in charge.
2. Detail technical specifications of concreting, steel, cement, curing, shuttering, aggregate, design mix etc. are enclosed with document.
3. The centre line of proposed span of RCC box will be initially set out by the Engineer or his representative. The contractor shall be responsible for accuracy of the lines, levels and dimensions of work in accordance with the drawings, directions or instructions supplied time to time to him and every facility shall be given toe the Engineer for inspection of the same. The contractor shall also alter or amend any error in the dimensions, lines or levels or work set out or constructed by him to the specifications of the Engineer.
4. Junction arrangements between the box segments shall be ensured as per approved GAD and structure drawings.
5. The provision of 2 coats of approved quality of epoxy as per USSOR item with contractor's own labour and material based on Railway's drawing to minimize the movement of the track during the pushing of the box. The item also includes taking suitable precautions while pushing the box under running Railway traffic to ensure that there is no disturbance to the over laying track and there is no shift in the box either in the horizontal or vertical direction. In case it is decided by the Engineer to provide epoxy coating on the outside of top and sides of the box to reduce friction, the same shall be considered to be included in the cost of this item and nothing extra shall be payable over and above the quoted rate.
6. For the purpose of measurement of the pushed length of box the finished length of RCC box in final position will be measured. This will not include the length of front /rear shield or any other temporary fixtures fitted to RCC Box to facilities the jacking operation. The overall length for the purpose of payment will be horizontal length of RCC box pushed, excluding any temporary work.
7. The No. of boxes to be pushed shall be in minimum three segments or as per approved drawing. Thrust bed for segments should be of sufficient length to accommodate minimum Two boxes back to back i.e. both the boxes to be cast before jacking. Pushing of box will not be allowed until both segments are casted and cured for 28 days. Remaining segments should planned as per decided by Engineer in charge or design stipulations. The decision of Engineer in charge shall be binding to contractor regarding length of segment.
8. The item also includes providing thrust wall /bed and other temporary works as required with all labour and materials (excluding as per relevant USSOR item of all type except cutting edge and other removable structural steel) etc. required for temporary work as well as the RCC box will be arranged by the contractor at his own cost.
9. The item also includes provision of all temporary protection work as necessary for existing running Railway tracks and removing the same after completion of work.

10. The item includes making the joints of boxes watertight by cement grouting and applying epoxy compound around joints.
11. The casting of box shall be done in the presence of Rly. Engineer in charge of the work site.
12. The contractor can be asked to remove any buried foundation or overhead of obstruction for which he shall be paid under relevant USSOR items.
13. The concrete design mix shall be as per mix design approved by Engineer. The cement content shall not be less than 440 kg/cum and use of 53 grade cement shall be preferable.
14. The completion of the work the ground all around up to a distance of 30 m is to be carefully dressed and given a slope of 2:1 or as directed by the Engineer in charge. Nothing extra shall be paid on account of this.
15. The dimensions of box changes, then prorate basis opening will be considered for payment.

C: Box pushing:

1. The RCC box segments after attaining full design strength as per design mix shall be pushed through the existing embankment to from an opening for passage of road traffic under Railway tracks.
2. Box pushing shall be carried out using hydraulic jacks of suitable capacity multiple numbers of jacks shall be applied on the pre-decided jacking points. Contractor has to provide M.S. sheet of suitable thickness at the end, around the box & junction of first and successive boxes to avoid infiltration of soil/ slurry, sagging of earth by the side of RCC box.
3. During the pushing operation the alignment & levels of the box shall be watched continuously and at no time the alignment will be allowed to deviate beyond permissible lines both in horizontal as well as vertical directions.
4. Box pushing operation shall be carried out during day time only and must be completed at least one hour before the sunset.
5. Box pushing shall only be carried out in presence of the Railway's Supervisor and with the prior consent of Railway's authorized site representative.
6. The rate of box pushing shall be kept such so as not to disturb the Railway track beyond permissible limits.
7. Box pushing shall only be carried out under proper speed restriction and full track protection as per IRPWM. Necessary speed restriction (SR) for the work shall be arranged by the Railway's. In case due to some traffic operation reason caution order/ traffic block could not be arranged no claim for work held up will be given however on account of delay due to imposition of SR/traffic block extension in time limit for such period will be granted on railway account.
8. During the entire period of box pushing maintenance and rectification of track geometry just above and on both approaches of box shall be the sole responsibility of contractor. He will arrange adequate number of P. Way labour with necessary tools & plants to maintain the track. During and after box pushing. The length of track required to be attended; numbers of labour to be deployed, tools & plants required for maintenance of track will be decided by the Engineer in charge of his authorized representative at site whose decision shall be final and binding in this regard. The rate of relevant USSOR item is inclusive of maintenance and rectification of track during box pushing operation. However for making up of final level and alignment after completion of box pushing the contractor will have to impart two/ three round of packing for which payment shall not be made.
9. In case the contractor fails to deploy adequate number of trained P-way labours and or necessary tools Railway. At its discretion, may deploy its own man power with necessary tools for maintaining the track during box pushing. In this case an amount @ Rs. 500/- (Rs. Five Hundred) per men-day shall be recovered from contractor's dues. This recovery shall be without prejudice to any other right or remedy available in the contract.

10. The gaps created at intermediate jacking points should be grouted with approved quality of material having adequate structural strength immediately after completion of pushing operation so the no leakage occur from the joints during the service of bridge.
11. C. C. wearing coat of suitable thickness, chamber and longitudinal drainage arrangement as per approved drawing shall be provided inside the box.
12. Drag sheet shall be provided by the contractor to minimize drag and disturbance of the soil cushion on the boxes during box pushing operations. Maximum number of drag sheets as directed by Engineer in charge shall be provided based on structural safety of box during pushing and all arrangement required in connection with drag sheet shall be provided free of cost and nothing extra with will be paid. The contractor will be at liability to utilize modem methods, of reducing skin friction with approval of the Engineer in charge. Drag sheet will remain as the property of the contractor after completion of work.
13. During the execution of work if any sub soil/ rain water is met with, the contractor will make their own arrangements to bail out / pump out such water from the site, free of cost.

2. Material supplied by contractor:

-Material confirming to various IS /Railway standards shall only be supplied and used in work after getting the approval for the same in writing from Engineer in charge.

-The contractor shall have to submit the cash memo and challans along with the lot of steel /cement purchased from various retail factory outlets to SSE (W) in token of proof of purchases off steel or cement from reputed dealers, steel / cement shall not be allowed to be used by SSE (W) without these documents.

- The test certificate from approved laboratory shall be produced at the beginning and subsequently at intervals as decided by the Engineer.

-Contractor shall remove from site such materials as rejected by the Engineer in charge within reasonable time as specified by him.

-The payment of steel/ cement shall be as per quantity calculated and actually used by the Railway accordingly to prescribed specification and approved drawings. If any extra quantity of steel /cement over and above shown in the drawing and standard laid down has been used by the contractor, in the opinion of Engineer in charge for any other reason such as wastage of bad workmanship or reasons if any in the opinion of Engineer in charge, then the cost of such material steel/ cement shall not be paid by the Railway.

- All excess consumption shall be borne by the contractor.

3. Other common special condition for this tender:

3.1 Contractor shall be responsible for giving proper layouts/ marking centerlines of structures and these shall only be checked by the Railway representative.

3.2 For ensuring proper curing of structures, the contractor shall put minimum one Khallasi at each site/ Station at the disposal of Engineer in charge, failing which a recovery of Rs. 500/- (Rs. Five hundred) per day per site will be made.

3.3 If required by Railway during any accident /natural calamities, Railway Administration can utilize the tools and plants along with machineries of the contractor working as required as per situation warrants. The hire charges shall be payable to contractor, in this connection a new NS item will be operated by the Railway Administration. No claim shall be entertained on this account.

3.4 The contractor has to submit the list of tools, plants and machineries available at site to the Engineer – in- charge at the time of starting work at site other than specified elsewhere in the Tender Documents.

3.5 The tenderer/s shall quote his/their percentage above/below in words and figures against specified schedules in the rate sheet. If individual percentage or rate quoted in the tender against individual item, then tender shall be treated as invalid and offer shall not be considered. Tenderer/s are requested to take note of this.

3.6 The following views shall be kept in mind while submitting the Running / final bill for technical check: Earthwork register, level book, steel registers, HRs, test certificates where as required etc. shall be maintained carefully and shall submit along with Running/final bill for technical checking.

4.0 In case of any ambiguity between plan and site conditions etc., decision of the Engineer in charge shall be final and binding upon the contractor.

Special condition and specification of work.

1.1 RCC/CC WORK QUALITY CONTROL:

1.1.1 The contractor/s will be required to exercise effective quality control over production, placement and curing of concrete at site. They will ensure proper specifications as laid down in IS 456 (1978). No extra payment for this quality control shall be admissible.

1.1.2 Samples from fresh concrete shall be taken as per IS-1192 (1959) Method of sampling and analysis of concrete and cubes shall be made, cured and tested in accordance with IS:516(1959) - `Method of Test for strength of concrete'. The contractor/s shall arrange for testing of cubes in compression at his own cost in accordance with IS:516(1959) in presence of the Engineer's representative. No extra payment for carrying out such test will be made to the contractor.

1.1.3 The test cubes of 15cm x 15cm x 15cm of size will have to be prepared by the contractor. The number of cubes from any batch of concrete shall be as per IS: 456-1978.

1.1.4 The contractor/s will maintain quality control charts at site of work based on the test results, which should be made available to the inspecting officials on demand.

1.1.5 Aggregate, sand and water to be used for CC/RCC should confirm to relevant ISI standard. Testing shall be made at contractor's cost to ensure quality.

1.1.6 No concreting will be allowed till reinforcement and shuttering work are properly checked and approved in writing by the Engineer's representative.

1.1.7 All concreting to be done for CC/RCC work shall be mechanically mixed by use of concrete mixer and properly compacted by use of vibrators.

1.1.8 Contractor shall ensure monolithic concreting during one shift of concreting. Any rest/pauses such as for meals etc. should be adjusted accordingly with the consent of the Engineer's representative.

1.1.9 During placing of concrete, free fall of concreting shall not be more than 4 ft. (1.25m) and concrete shall be cured to the satisfaction of the site Engineer.

1.1.10 Removal or de shuttering of formwork shall be as per IS- 456-1978 and in the presence of Site Engineer and no patch repair or finishing surface shall be done without approval of Engineer in Charge. Any such rectification will be done by the contractor at his own risk and expenses.

1.1.11 Any part of the RCC which does not come up to the standards or is damaged during any operation of the work shall be fully made good by the contractor at his own cost.

1.1.12 Construction joint may be provided only after approval of Engineer and will be prepared as under.

1.1.13 All the lattice which has come on the surface will be removed by wire brushing before hardening of the concrete in such a manner that aggregate are exposed but not disturbed from their position. Surface should be cleaned by water jetting.

1.1.14 Contractor shall provide only approved type of form work preferably of steel and the same shall be got approved by the Railway before use in work.

1.1.15 Any loose mill scale or loose or scaly rust from the reinforcement must be completely removed

before it is placed in position. Sufficient number of concrete/cover blocks of size equal to minimum cover specified in drawing shall be provided before placing the reinforcement in position.

1.1.16 For all concrete work, the aggregate will be tested as per standard tests prescribed to IS- 2384 Pt. I & II, IS-383 and Unified Standard Specification book to determine their properties and their grading. As far as possible, stock piling of the aggregates shall be done in accordance with the standard practices to enable standard analysis being made of such batch that is brought to the site. The design of the mix will be carefully done from representative samples of the aggregate. The preliminary test results along with analysis of aggregates and mix design calculations should be sent to the Engineer for his approval. The contractor/s will modify/carry out the mix design to the satisfaction of the Engineer if so required and get his final approval. Such approval, however, does not relieve the contractor/s of his/their responsibility and obligations regarding the minimum strength requirement.

1.1.17 Centering and shuttering for all major RCC & CC work, the contractors are required to get designed, the shuttering and centering, properly and submit, their design with drawings for approval of the Engineer. No concreting will be done unless such drawings have been approved by the Engineer.

1.1.19 All the joints between shuttering plates and concrete surface shall be water tight by application of sponge or any other suitable materials.

1.1.20 Form work pattern provided shall be to the satisfaction of Engineer-in-charge. No claim will be entertained on this account.

1.1.21 Quantity of reinforcement as required for the work will not be a matter of dispute for RCC work and no extra payment for using higher reinforcement will be admissible over basic RCC rate.

1.1.22 Coarse aggregate for RCC - (6mm to 20mm) only crushed broken stone metal of approved quality shall be permitted.

1.1.23 Slab concrete shall be placed vibrate and finished in such a way to required slope so as to avoid any possibility of leakage.

1.1.24 If required, dewatering/timbering shall be done by the contractor for which no extra payment shall be made. The method of pumping shall be decided by Engineer at site and shall be as per his direction.

1.2 CURING OF RCC/CC WORK.

1.2.1 Contractor will have to make sufficient arrangement of water required for curing purposes. However, all the vertical surfaces and bottom exposed surfaces of concrete mortars will have to be cured by application of curing compound as per the direction of site Engineer-in-charge of work and nothing extra shall be paid for this.

1.2.2 The contractor/s will have to submit the test results from a Govt. approved Engineering College/Laboratory regarding efficiency of the curing compound and the curing compound shall be allowed to be used only after obtaining written approval from Engineer-in-charge of work.

1.3 CONCRETE GRADE SPECIFICATIONS ETC.

1.3.1 All controlled concrete mix shall be properly designed for available materials from a reputed laboratory approved by the Railway and submitted to Railway before doing the work. No extra payment will be made on this account.

1.3.2 Admixtures or pigments containing calcium chloride should not be used. Workability aids and retarding agents may be used provided that suitable precautions are taken and it can be shown by tests that product to be added will produce the required effect without in any way changing the other

qualities required in the concrete or damaging the steel.

1.3.3 Accelerating admixtures shall not be used in structural member concrete containing reinforcement, pre-stressing tendons or other embedded metal.

1.4 DETAILING

1.4.1 Proper detailing of reinforcement is essential as any cracking caused by defective detailing of reinforcement accelerates corrosion. Importance shall be given to ensure proper drainage, water proofing of the surface with protective coating is necessary.

1.4.2 The contractor shall make necessary arrangement for clearing and removing rust, etc. from reinforcement before the material are put to actual use.

1.5 BINDING WIRE

All ends of binding wire shall be carefully turned inwards so that they do not project out of concrete to start rusting action. Galvanized wires of 18 gauge annealed wire shall only be used as binding wire.

1.6 FORMWORK AND FALSE WORK:

Form work and false work are very important for all concrete structures in question for these have influence on shape strength and durability of the structures. For this reason, details must be correctly designed and installed. The design of the form work shall take account of the required surface conditions (appearance, compatibility with the required finish). The form work and false work together must provide safe working conditions. Safe access must be provided using additional scaffolding as necessary. The drawing of form work shall be got approved by Railway.

1.7 CONSTRUCTION JOINT

No extra payment will be made for gaps between old and new concrete work.

1.8 REMOVAL OF REJECTED MATERIAL

Any filling material (including stone) which is rejected by the Engineer for any reason before or after placing shall be re-excavated and removed from site at the contractor's expenses.

1.9 WATER

The water shall be clean and free from injurious and deleterious materials. Normally potable water may be considered satisfactory.

2.0 SUPPLY OF CEMENT (53 GRADE)

2.1 Cement procured by the Contractor shall be fresh conforming to IS 8112-1989 or latest IS Cement code.

2.2 Cement shall be accompanied with a test certificate issued by manufacturer otherwise a sample of cement at the direction of Engineer shall be tested for initial & final setting time, compressive / tensile strength from reputed Govt. lab or Engg. College at contractor’s cost. In case of any doubt regarding quality of cement, additional samples may be collected and sent to the reputed Govt. lab or Engg. College etc. for testing at Rly’ cost. Only on receipt of satisfactory certificates this cement shall be allowed to be used on works. The procurement of cement shall be planned by the contractor that this does not affect the progress of work.

2.3 The contractor shall have to submit the cash memo along with the lot of cement purchased from the various retailers / cement factory to IOW as a proof of purchase of cement from reputed dealer. No cement shall be accepted by the IOW without cash memo.

2.4 No payment shall be made for the cement used in the work rejected by the Engineer. Cement shall be procured from authorized dealer / cement factory and the receipt shall be furnished on demand. All empty bags shall be taken away by the contractor after use of cement and cost of empty cement bags shall not form part of quoted rates against these items.

2.5 Cement which is not used within period as specified in IS code/manufacturer, shall be removed by contractor from site and shall not be paid for. In no case any expired date cement shall be permitted to be used in the work.

2.6 Cement consumption register shall be meticulously maintained giving quantity of work done / consumption of cement of each day.

2.7 Cement bags left out after completion of work shall be taken by the contractor and the Railway shall not make payment against these bags.

2.8 The cement shall be kept by the contractor under his custody at site of work and Railway will not be responsible for any damage, pilferage theft etc.

2.9 The cement shall be transported by the contractor's own vehicle, labour including loading, unloading and all lead, lift and taxes etc. complete. No extra shall be paid for the same.

2.10 The tenderer should note that the Railway is at liberty to use Railways cement at any time for the work.

2.11 Cement shall be procured/purchased from cement factories/ authorized dealers/retailers from only reputed brands such as Ultratech, Siddhee, Sanghi, Binani, JK(All Brands), Birla, HI-Bond, Ambuja, Hathi, Wonder, Kamal, Nuvoco, ACC, Lafarge, Bangar and coromandel cement.

3.0 SUPPLYING, STRAIGHTENING, CUTTING, BENDING, HOOKING, BINDING AND PLACING IN POSITION HYSD/TMT STEEL IN REINFORCEMENT

3.1 The steel supplied by the contractor shall conform to the latest version of:

(i) IS 432 (Part-I) 1982 or latest version - Specification for mild steel and medium tensile steel bars and hard drawn steel wire for concrete reinforcement.

(ii) IS 1786-1985 or latest version- Specification for high strength deformed steel bars and wires for concrete reinforcement

3.2 Necessary test certificates for steel shall be obtained and submitted to the Railway Engineer. Steel without test Certificate from Engg. College/ govt. approved Lab. shall not be used in the work.

3.3 Quantity for this item shall be calculated as per nominal weight of steel section for the length actually used in the work no payment will be made for the wastage and the contractor will be allowed to take away the scrap and excess steel away from the site.

3.4 The Reinforcement Steel (TMT Bars) shall be procured only from those firms, which are Established, Reliable, Indigenous & Primary Producers of steel, having Integrated Steel Plants (ISP), using iron ore as the basic raw materials and having in-house iron rolling facilities, followed by the production of steel through the process of DRI-EAF/EIF,BF-BOF and Corex-BOF or any other technology[Confirming to Schedule of Technical requirements(STR) for supplying of TMT Reinforcement bars to IR issued by RDSO (Doc No. WK-G-8.1-1 ver.1-3)]. (Vide CAO (c) letter No. WNC 623/5(Steel) Vol. I dated 17.07.2024.

3.5 The contractor shall furnish BIS manufacturer's test certificate along with test results for each category for every lot brought to the site of work. The manufacturer's test results shall be from the manufacturer's lab only. The test results from other lab shall not be accepted and the consignment will be rejected. Testing of steel shall be carried out as per relevant IS (Vide CAO (c) letter No. WNC 623/5(Steel) Vol. I

dated 17.07.2024.

3.6 Some of the Major Integrated Plants as per latest information of Ministry of steel are listed below: (Vide CAO (c) letter No. WNC 623/5(Steel) Vol. I dated 17.07.2024.

(i) Steel Authority of India Limited
(ii) Rastriya Ispat Nigam Limited
(iii) Tata Steel Limited
(iv) Essar Steel Limited
(v) JSW Steel Limited.
(vi) Jindal Steel & Power Limited
(vii) Ispat Industries Ltd
(viii) Bhushan Power & Steel Ltd.
(ix) Bhushan Steel Ltd.
(x) Shri Bajrang power & Ispat Ltd.
(xi) Shyam Steel Industries Limited, Kolkata.
(xii) M/s SRMB SRIJAN Ltd. Kolkata.
(xiii) M/s Shree Nakoda Ispat Ltd., Raipur, Chhattisgarh.
(xiv) M/s Agrawal Foundries Pvt. Ltd. Secunderabad, Telangana
(xv) IISCO
(xvi) JINDAL Panther
(xvii) ADHUNIK TMT
(xviii) Goel TMT
(xix) ELECTRO STEEL
(xx) SUPER SHAKTI
(xxi) AF STAR
(xxii) NEO STEEL
(xxiii) GK TMT
(xxiv) RASHMI
(xxv) RELIABLE
(xxvi) MSP TMT
(xxvii) BALAJI SHAKTI
(xxviii) NANDAN TMT
(xxix) ET TMT
(xxx) SEL
(xxxi) V-XEGA
(xxxii) Electrotherm (India) Limited.
(xxxiii) Real Ispat & Power Limited

3.7 This list is indicative and TMT Reinforcement bars can be procured from any other manufacturers whosoever confirms with the criteria as mentioned para No 3.1 above.

3.8 Contractor may supply and utilize in works, steel of manufactures listed above. However, the price variation (if applicable) shall be governed by Railway board's latest Guidelines, irrespective of supply of steel from any manufacturer of TMT Reinforcement bars.

3.9 The original invoices of materials should be obtained to ensure traceability & usage for each and every material component (including steel, cement) for correlation at later stage. Details such as agency, name of project, site location shall be noted on the invoices. The invoices should be signed by Railway officials ADEN, SSE to confirm their acceptance. Proper attention/care should be taken, if any fake invoices are submitted by any agencies. The original invoices of cement/steel/other materials etc. with details such as agency, name of project, site location etc. by executives must be ensured before passing bills. Consolidated record of the invoices in the work shall be meticulously maintained. (Ref: HQ letter no. WNC 623/0 dated 28.09.2022)

3.10 The contractor shall be responsible for getting the measurement of steel entered into steel register and signed by the Assistant Engineer in charge before concreting is done to avoid dispute regarding quantity of steel used.

3.11 The item is inclusive of the cost of binding wire and no separate payment admissible for the same.

3.12 The contractor shall not use any bar lesser than 3.5m in length unless and otherwise permitted by the Engineer in charge.

3.13 The steel shall be kept by the contractor under his custody at site of work and Railway will not be responsible for any theft/ loss or damages.

3.14 The tender/s shall note that Railway will be at liberty to use Railway steel for this work at any stage. In that case when steel and binding wire are supplied by the Railway free, the labour charge for straightening, cutting, hooking, bending, bindings and placing the steel in position shall be paid.

3.15 The length for lapping of reinforcement hooking, bending etc. shall conform to provision in IS 456 latest editions.

3.16 The quantity so payable under this item shall further be restricted to the quantity as per approved plan / drawing and the decision of the Railway Engineer in this regard shall be final and binding upon the contractor.

4.0 GENERAL CONDITIONS AND SPECIFICATIONS FOR REINFORCEMENT STEEL (TMT BARS) AND STRUCTURAL STEEL.

4.1 All Reinforcement Steel (TMT Bars) and structural Steel shall be procured as per -IS:1786 and IS:2062 respectively. Independent tests shall be conducted, wherever required, to ensure that the materials procured conform to the specifications.

4.2 However, only certain isolated sections of structural steel, not being rolled by ISPs, can be procured from the authorized re-rollers of ISPs or authorized licensee of BIS having traceability system and who use billets produced by ISPs.

4.3 The steel procured shall be reasonably free from cracks, surface flaws, laminations, rough and imperfect edges and all other harmful defects. Steel sections, shall be free from excessive rust, scaling and pitting and shall be well protected. The decision of the Engineer regarding rejecting any steel section on account of any of the above defects shall be final and binding.

4.4 Structural steel work shall conform to the requirement as specified in Indian Railway Unified Standard Specifications (Works and Materials) Vol. I & II.

4.5 Necessary purchase bill along with test certificate for steel shall be obtained and submitted to the Engineer in Charge. Steel without the test certificate from approved laboratory/Engineering college shall not be used in the work. Certified copy of the same shall be submitted to Divisional Office along with running bills/final bills. Steel shall be tested for Tensile strength and bend test as per IS: 1599 as specified in Indian Railway Unified Standard Specifications (Works and Materials) Vol. I & II.

4.6 Quantity for this item shall be calculated as per nominal weight of steel section for the length actually used in the work. No payment will be made for the wastage and the contractor will be allowed to take away the scrap and excess steel away from site.

4.7 The contractor shall be responsible for getting the measurement of steel entered in to steel register and signed by the Engineer in charge of the work before concreting is done to avoid dispute regarding quantity of steel used in the work.

4.8 The rates quoted for this item is deemed to be inclusive of the cost of binding wire and no separate payment shall be admissible for the same.

4.9 The steel shall be kept by the contractor under his custody at the site of work and Railway will not be responsible for any theft thereof.

4.10 The quantity so payable under relevant item shall be restricted to the quantity as per approved plan/drawing and decision of the Engineer in Charge in this regard shall be final and binding upon the contractor.

- Authority: - PCE- CCG's letter No.W/562/1 Misc (W6) dated 03.07.2019

In case of any ambiguity between the plans and site conditions etc., decision of the Engineer-in-charge shall be final and binding on the contractor.

COMPLETION DRAWINGS

-After the completion of works in all respects the contractor shall submit completion drawing in hard copy and in soft copy, PG will be released after submission of completion drawing.

-For furnishing the completion drawings it shall be necessary that the contractor keeps a detailed record of the progress of work duly signed by railway's representative and prepares the drawings when the work is in progress.

-Minimum 25-30 good resolution Arial photograph of each RUB must be submitted along with completion drawing by contractor own account. No extra payment shall be made for the same.

4.0 SPECIAL CONDITION FOR EARTHWORK.

a. The earthwork is to be done for making up the cess, diversion, approach etc. as per requirement.

b. Vegetation etc. on the existing bank wherever applicable shall be removed prior to commencement of earthwork. However roots of the bushes/trees shall be left, as it is assist future growth and consolidation of formation. Tree cutting and removal will be done by the contractor as per instructions of Engineer-in-charge of the work.

c. Earthwork in embankment with contractor's own earth, suitable for formation of Railway Bank as per Railway's representative shall be done at locations specified by the Engineer's representative.

d. Earth work in bank shall be done in successive layers of not more than 30cms. in depth. The rate shall include breaking clods leading, lifting etc. complete. Each layer shall be compacted using hand roller/rammed before laying the next layer.

e. The Contractor/s shall not start the work unless he/they is/are satisfied that the proper ground levels have been recorded in proper level books by the Engineer's representative and the same

are signed in token of that all the levels are accepted by him, failing which the levels recorded in the level book by the Engineer's representative shall be binding on the contractor/s. It will also be the responsibility of the contractor/s not to start the work unless ground level are recorded in proper level books provided for the purpose and the same are signed by him/them.

f. LEVELLING INTERVALS, MEASUREMENT etc.:-

Normally levels shall be taken making a grid of 1m x1m minimum, however if the topography warrants to take more measurements at less intervals the same may be exercised to get exact quantity.

g. Before the commencement of the work, the cross sectional levels of ground will be taken in the presence of contractor/s and will be taken in the presence of contractor/s and will be plotted in due course. Similarly, final level will be recorded in the presence of Contractor/s in proper level books and will also be plotted on the original sheets in to sign both the level books and the profile sheets.

h. The area of the cross sections covered by standard theoretical profile shall only be considered for payment. The contractor/s will not start the earthwork with his /their own earth unless a communication to this effect giving chainages where such work to be done has been given to his / them by the Engineer.

i. If excavated earth from the RUB is available at site and in the opinion of DEN the same is surplus, contractor can use the same earth after permission from DEN.

j. SHRINKAGE OF SUBSIDENCE ALLOWANCE:

Necessary deduction for shrinkage shall be made for compacted earthwork from the quantities as per Unified specification book 2010 & IRUSS (Works & Materials) Vol. I & II of 2010. However 20% shrinkage shall be deducted from non-compacted earth, if any.

k. If during the construction of the embankment (i.e. till it is finished and final measurements have been recorded), subsidence take place due to elements of weather such as rains, floods, cyclone etc. all such rain cuts, subsidence etc. will have to be made good by the contractor/s for which no extra payment whatsoever would be admissible.

l. Sample of soil proposed to be used shall be submitted by the contractor before its use in the work and sample shall be got approved from the concerned DEN, however following soils shall not be used:

i. Soils having 10 to 15% clay and slit greater than 50% exhibiting dispersive nature.

ii. Peat and organic soils.

iii. Soils likely to disintegrate early. iv. Poorly graded sand.

iv The toe line for the bank/cutting as per the side slopes and required formation levels

m. Final payment will made on the basis of cross sectional areas of the finished bank/cutting. The finished bank will mean the bank that has been finished up to desired formation level. No extra payment for settlement of the bank if any, having taken place during the execution/natural settlement due to rain etc. or for settlement of the earthwork into the natural ground will be admissible.

n. The rates quoted by the contractor/s shall be inclusive of taxes, octroi, royalties, freight, cost of transportation of materials to the site of work and all other taxes in force or enforced during the currency of the contract.

o. The earthwork shall be compacted using hand/mechanized rollers after sprinkling quantity of water for obtaining sufficient compaction.

p. As the work is to be done along the running track, all precautions shall be taken by the contractor in ensuring that no infringement take place to the standard schedule of dimensions & no unsafe situation, whatsoever, is created.

4 MAKING CUT OF RAILS:-

q. The scope of work under this item will include cutting of 90 R/52kg/60kg (72/90UTS) rails with contractor's own rail cutting machine, blades, labour etc.

r. Cut shall be truly square in both vertical and horizontal directions. This item also includes sorting out of rails, marking the required length, and spreading of rails from the stack for the purpose of cutting. Cut, which is out of square, shall not be paid and will be considered as 'Improper cut'. Work shall be carried out by machine and no Gas cutting shall be permitted.

s. If any other rail section is to be cut, rate payable shall be on prorata basis, of the weight. For that purpose the rate of this item shall be considered for 52Kg rails.

t. The contractor shall maintain a complete record for the total number of cuts in a register, which will be got signed daily by the Engineer's representative.

5 MAKING 32MM DIA HOLES TRUE IN 90-R/52KG/60KG. RAILS:-

a. The scope of work includes drilling of holes of 32mm holes with contractor's own tools, plants, equipments, labour etc. The drilling shall be done correctly as per template for standard fish plated joints of corresponding rail section. These rails may be of 72UTS / 90UTS specifications.

b. The contractor shall maintain a complete record for the total number of holes in a register, which shall be got signed daily by Engineer's representative.

c. Chamfering of bolt holes shall be done under this item with contractor's own chamfering tools, for which no extra payment will be made. Any hole made at incorrect distance will be not paid.

6 SPREADING THE STONE BALLAST.

a. The contractor shall lift and lead the ballast from the stacks and spread it to the BG/MG profile. The rate quoted shall be deemed to be inclusive of all lead, lift and crossing of track, whenever required. Ballast from stacks shall be lifted only after it is handed over to contractor in writing by the concerned SSE/SE (P. Way).

b. **Mode of Measurement.**

i). Spreading of ballast shall be done to BG/MG profile as per IRPWM and other guidelines and as directed by Engineer-in-charge.

ii). The contractor will take all safety precautions while dumping ballast into running track.

iii). For any of the ballast stacks, the payment under this item shall be considered only when the stack has been spread completely; no residual quantity of ballast shall remain in the stacks.

c. **Mode of payment.**

i) 80% payment shall be made after putting of the ballast into the track and,

ii) 20% payment shall be made after complete dressing of ballast as per the required profile.

7 REMOVING & INSERTING SLEEPERS:-

a. The tenderer has to remove the existing CST-9/ST/Wooden/PRC sleepers laid at various density under this item and to insert 52 kg/60kg. PRC sleepers at density 1340/1540 Nos/Km.

b. While removing PRC sleepers there is possibility of jamming of ERC clips at certain location. The tenderer should ensure that the sleepers are removed by suitable de-jamming technique without damaging the PRC sleepers. In case sleepers are damaged by the contractor during removing operation, recovery will be made as per extent rules. The payment against this item will be made for the actual quantity of sleepers inserted by the contractor.

c. The released ST/CST-9/ PRC sleepers shall be placed/ stacked along the track or in yard as per the direction of representative of Engineer in Charge and fittings shall be handed over at PWI's nominated depot / store. No extra payment shall be made for depositing of sleepers fittings to

PWI's nominated Depot/Stores. However in case of the transportation of the released sleepers from the Block section/site to the nominated station yard/depot shall be made against the relevant item.

8 THROUGH PACKING OF TRACK:-

This item pertains to through packing of track for it fit for specified speed. The packing work shall be executed in strict compliance to Para 227 of IRPWM as specified in the description of this item and to the satisfaction of P. Way in Charge. This packing shall be other than the initial packing done for passing of the trains.

9 MUCK DISPOSAL:-

The muck generated after deep screening shall be disposed off within Railway Limit up to a lead of 10 Kms. Suitable location for disposal of muck shall be decided by the representative of Engineer in Charge. Contractor is at liberty to use his own transportation means like tractor etc. for disposal of muck as per feasibility. However suitable safety precaution shall have to be made by the contractor while plying the same within Railway limit.

10 REMOVING OF RAILS:-

This item is meant for removing existing 90R/52Kg/60kg rails from track in block section and in yards. The released rail panels should be placed safely along the cess and in yard so as not to infringe the moving dimensions. The released track fittings like fish plates etc. are to be handed over to PWI's nominated stores through proper hand receipt. No extra payment will be made for transporting the released fittings to PWI's nominated depot / stores. The released rails will be further transported to nominated station yard as decided by the Engineer in Charge and will be paid under relevant item.

11 LAYING OF RAILS:-

This item pertaining to laying of new/SH 90-R/52Kg/60Kg. This item shall be executed in suitable traffic block as per direction of PWI at site. Before insertion of ERC clips the same shall be greased by the contractor. The grease shall be supplied by the Railways and the required quantity shall be issued to contractors from the nominated depot through hand receipt and the contractor will have to make his/their own arrangement for carting this to the site of work.

12 PREPARING AND FIXING CHECK RAILS:-

a. The rail of desired weight for fabrication shall be supplied to the contractor from the store or any other location in the jurisdiction of the respective SE/P way.

b. The fabrication of the check rail can be done by the contractor at the site of work; the groove shall be made in rail foot for accommodating MCI insert of PRC sleeper by gas cutting equipment. The contractor will have to make his own arrangement for carting of the rail from the location where they are handed over to the site of work, for which payment shall be made under relevant item.

c. The fabricated check rail shall be fixed by the contractor as per the direction of P.way in charge at site and as per the IRPWM. The check rail blocks and bolts shall be supplied to the contractor from PWI depot.

d. The released material after fabrication of the check rail shall be handed over to the PWI at PWI’s nominated store/depot against a proper HR. No payment shall be made for transportation of the released material (scrap) from site to the store of PWI. The scrap shall be taken over in weight which shall be mentioned in the HR.

13 PAIRING OF RAILS:-

The item includes, pairing of rails shall be done perfectly square to each other in straight portion and staggered in curved portion wherever required as per the direction of engineer in charge at site and as per IRPWM.TRANSPORTATION OF RAIL:-

a. This item pertains to the transportation of 90R/52kg/60kg rails from site of work to nominated station/ Yard by road vehicle/Rail dolly etc. and vice versa. The contractor is at liberty to use any suitable transportation means like Road Vehicle / Rail dolly etc. for execution of this item. The transportation should be executed in such a manner that rails are not damaged during transportation.

b. The estimated lead involved under this item will be approximate 5 Kms.

c. The transported rails should be placed/ stacked by the contractor as per instructions of representative of engineer in charge in such a manner that loading work can be executed smoothly.

d. The rates quoted by the tenderer shall be inclusive of all lead, lift and crossing of tracks if required.

e. No block will be required for rail dollies being used for transportation of the rails. Flagman for protection of track shall be provided by Railway. In case of track circuited track contractor should ensure that no track circuit failure takes places while working with Rail dollies.

f. Payment shall be made for this item on the basis of standard weight for actual quantity transported by the tenderer.

14 TRANSPORTATION OF SLEEPERS:-

a. The scope of work in this schedule includes transportation of PSC/CST-9/ST/Wooden Sleepers including special type sleepers for P&Cs, LCs, Bridges, and such other materials of similar nature and description from any PWI/IOW's depot to the site of work or vice a versa. Transportation of P. Way materials like Sleepers of all types and fittings for Rails, Sleepers and other materials from any PWI's depot to the site of work or vice a versa.

b. The contractor shall arrange for his own vehicles / Trailers, T & P (like Cranes etc.), labour; fuel etc in completing the work. The rate/s accepted against the tender shall also include all charges for taxes, royalties and such other charges. Railway is not liable to pay any amount other than what has been accepted. Railway shall not arrange for supplement such as material trolley, Dip lorry, Labour for execution of the work.

c. The sleepers and other P. Way materials transported under this item shall be properly stacked in nominated location/station yards/workshops as per the direction of Engineer in Charge. The stacking of sleepers and other materials for all new, U/S and S/H should be done in separate stacks as per direction of representative of the Engineer in Charge.

d. The tenderer is requested to make a survey of the site from where the sleepers and other materials are to be collected and loaded and also the site where the sleepers and other materials are to be transported and placed before quoting the rates.

e. The contractor shall stack the sleepers and other materials at the location specified for the purpose and in the area earmarked for the same by the representative of the Engineer in Charge.

f. The contractor shall be fully responsible for the materials from the time it is handed over to him to the time the same is taken over by the concern PWI/IOW in charge.

g. The contractor will be responsible for the security of the running trains, empty rakes, locos, Railway property, Railway materials or Railway Equipments etc. while working in the Railway Premises and any damage during the course of execution of above work shall be made good at the cost of the contractor. The decision in this regard of the Engineer in Charge shall be final and binding on the contractor.

h. All materials shall be kept clear off infringements, as per the Indian Railway Schedule of Dimensions, during loading, unloading, stacking, carting etc.

i. The handing and taking over the rails, sleepers and other materials will be done through proper HR in which the quantity of the materials along with approximate weight will be mentioned.

j. At some location it may be necessary to deploy tractor or any other suitable means for pulling the rail to the loading point. Nothing extra shall be paid for this.

k. The item is Non-schedule Item for which basic rates have been indicated against each item. Tenderer/s is / are required to quote %age rate against the schedule of work.

l. The item is pertaining to the Transportation of sleepers (ST, Wooden, CST-9, and PSC) and P. Way fittings of rails & sleepers and such other materials of similar nature and description from various locations to the site of work. This includes loading, unloading and stacking the materials wherever required as per the directions of Engineer's representative. This items are further categorized in to sub-items to facilitate payment of materials transported based on the distance/lead involved for each item.

m. The payment for the material transported as per items, shall be arranged based on actual receipt/ loading/ unloading of materials duly accounted for by the Railway representative. For this purpose, theoretical weight stipulated in track manuals, IRPWM and other Railway manuals shall be followed for arriving at the total quantity/ weight of material transported/loaded/unloaded.

n. In case unit weight is not available in any of the Railway manuals/ codes, average weight of 10(ten) similar items shall be taken by the Railway representative in presence of the contractor/his authorised representative on weighing machine and shall be signed by both the representatives of Railway and contractor/s in token of having accepting the same.

o. No compensation/claim shall be entertained either in regard to the theoretical weight as per the manuals or average weight so arrived at by carrying out the sampling as described above where standard weight has not been stipulated in the manuals/codes.

p. In case of second hand materials, weight shall be arrived at 95% of the theoretical weight shown in the manuals/codes.

q. The distances against items shall be arrived at from the road map and/or the actual distance covered via the shortest route. The lesser distance of these values shall be payable. Decision of the Engineer in Charge regarding the assessment of distance/lead shall be final and binding on the contractor.

r. No extra payment shall be allowed in case of crossing of Railway tracks.

s. The contractor/s shall be provided with Railway HRs/Challans showing the quantity and type of material transported/loaded/unloaded and the name of the consignee. The Railway representative shall certify the quantity of P. Way materials received and only such quantity transported shall be payable.

t. The contractor/s shall be responsible for any loss or damage to the P. Way materials during transportation, loading, unloading and stacking. Any such loss or damage shall be made good from contractor/s's dues equivalent to an amount at twice the latest rate of such material damaged plus supervision charges as per Railway's rules.

u. The contractor/s shall be fully responsible for the materials from the time it is handed over to him/them to the time the same is taken over by the Railway's representative after transportation and stacking.

15 Precautions while working in the vicinity of track: -

(a) When the work is required to be done along or near the existing Railway track, the contractor/s shall take such steps as are necessary for the safety of the track and labour working at site. He/they will also be required to programme his/their working so as not to interfere with the movement of trains. No extra payment shall be allowed for these precautions and also for crossing track/tracks, if required during the execution of the work, it should be ensured that the ballast of the track(s) is not spoiled or mixed with earth.

(b) In addition to the precaution by the contractor/s for the safety of the track and Labour, it may be necessary to post flagman in some locations as an additional safety measure. The contractor/s shall be fully responsible for any damage to or trespass caused by his/their men to any surrounding structure, Railways bear no liability whatsoever on this account.

(c) PWI and DEN open line shall inspect these works to ensure that these works do not pose any danger to running trains and all vehicles/machinery plying do not infringe the schedule of dimensions. If required DEN open line in whose jurisdiction such works are going on, can make it mandatory on the organizations/ contractor carrying out the works to take necessary precautions at their own cost like installation of barriers, driving of rail posts etc. at regular intervals so that no infringement can occur to the running line at any time

(d) ADEN open line may stop the work giving due notice if safety measure suggested by him are not carried out by the agency carrying out the work within reasonable time as decided by the ADEN open line.

(e) No vehicle will be permitted to ply adjacent to the running lines except when experienced gang man is posted as flagman. In case of accident of any nature, the contractor will indemnify Railways for any losses incurred thereby as a result of accident.

(f) In case of material supply by the contractor along the track, DEN/PWI shall exercise due care in selection of plots so that they are at an adequate distance away from the nearest running line. The contractor shall be an allotted demarcated plot by the Railway and he should stack material in such plots only. The plot for stacking material along the track shall be leveled up by the contractor at his own cost and got approved by the Railway Administration before stacking the ballast.

(g) If the contractor/organization fails to observe the instructions of PWI/DEN of the Railway and to ensure safety running tracks, the DEN/PWI of the Railway shall have the right to stop the work. The Railway shall recover all damages from the contractor/organization in case of any accident caused on account of infringement to running trains. Railway's decision shall be final and binding.

(h) In case of any ambiguity between the plans and site conditions etc. Decision of the Engineer-in-charge shall be final and binding on the contractor.

16 Placing of reliving girder:

a. This item is for placing of reliving girder including required earth work in all type of soil for placing of C.C. crib/sleeper cribs as per plan and filling back after completion of work and made formation in good condition. There are no extra payment will be made for requirement of extra earth, however he/they can use railway's earth.

b. In this item rates includes for dismantling of complete track with ballast for placing of reliving girder and linking of track with wooden sleepers on the reliving girder before launching it in position. The payment for excavation will be done in relevant WR-IRUSSOR items.

c. In this item rate also includes for required lifting of track as and when required minimum 100 m length on either side on approaches.

d. The rates are included for transportation of reliving girder with C.C. cribs/ sleeper cribs from depot to site of work and back to depot after completion of work with contractor's own truck/trailer, loading, unloading, lead, lift, labours crossing of track if any as advised by engineer in charge.

e. All loading and unloading will be done very carefully to avoid any damage to the reliving girder and C.C. cribs.

f. In case of any damage to reliving girder/C.C. cribs during transportation, loading, unloading & placing, recovery as imposed by Railway shall be born by contractor.

g. In this item rates includes for dismantling of track for removing of reliving girder and after removing of reliving girder relinking of track with ballast spreading as per standard of IRPWM after casting/ placing of RCC box.

h. For operations of phase work sufficient numbers of labours and equipments will be available by the contractor so as to complete linking/delinking and placing of reliving girder within block period. If the Engineer in charge is not satisfied with the arrangement made by the Contractor, he will be at liberty not to take the traffic block. The contractor will have no right to claim what so ever.

i. If reliving girder launched by road crane, there should be stand by road crane of sufficient capacity to be kept at site of work, for which 4 hours traffic block shall be arranged by Rly.

j. 2-3 hours traffic block shall be arranged by railway for provide ends cribs for resting of R/girder and contractor has to arrange sufficient labours and equipments for excavation, for insertion and leveling the CC cribs complete as per drawing, for passages of traffic @ 20 KMPH after block.

k. After insertion of R/girder, the contractor has to arrange a gang of about 8-10 skilled labours round the clock for maintaining R/girder and its track parameters as per IRPWM. The gang shall work as per instruction of Engineer at site.

l. Rates includes all kinds of operation required for handling of track before and after inserting of R/girder in order to maintain the continuity of track, so as to pass the trains at a restricted speed of 20 KMPH.

m. If due to any reason block shall not be arranged/on fix day or cancelled, in that case contractor shall not be entitle for any claim what so ever.

n. In case of Rly is to be provided reliving girder and CC cribs at the work site by Rly's own source, in that case the payment for transportation of reliving girder and CC cribs at the work site should not be paid to contractor on this account.

17 Special Conditions For Crane Working:

Procedure shall done as per joint procedure order for working of road crane in Railway premises during Engineering Blocks as per Railway Board's letter No.2015/CE-IV/RUB/205 dtd. 15.02.2016 & CSO-CCG's letter No. SFT5/ADI- Unusual dtd. 09.07.2015 & letter No. T/138/Misc. dtd. 03.08.2015.

(i) All cranes working during block shall be undertaken with sufficient standby arrangement. Minimum standby shall ensure the completion of work even with the failure of one crane, standby arrangements in the form of equipment, preparatory work and labour are to be arranged so as to ensure completion of the work in the event of the failure of crane. The standby arrangement shall have to be approved by engineer – in – charge of the work prior to commencement of the block.

(ii) All cranes brought for block working shall be got inspected by government approved surveyors at a date not more than twelve (12) months from the date of block and shall have been declared safe for the design load capacity. All safety arrangements to avoid overloading of the crane shall be functioning. Any deficiencies pointed out by the surveyor shall have been rectified and certified so by the surveyor.

(iii) The wire ropes, slings, D-shackles, hooks, and such other temporary arrangements used for lifting loads shall be in good shape, free from wear and tear and shall not suffer from twist/permanent deformations etc resulting in load carrying capacity. The permissible load on such arrangements shall be as per theoretical calculations with sufficient safety margins. All load carrying arrangements shall be load tested to 50 % overload on permissible load and shall not suffer any failure or permanent deformation during test.

(iv) Crane working, whether in block or otherwise shall be carried out under the supervision of technical person well versed in crane working. The supervisor shall liaison with the site engineer and carry out the work carefully and safely as per instructions received.

(v) Good communication between different crane operators, supervisors and site engineers shall be provided for coordination and safe working.

(vi) Good practices as per IS codes for crane working shall be adopted for the work and short cut or local practices shall not be allowed. The load shall be lifted ensuring proper balance, obviating the chances of load slipping out of slings. The slings must be protected at the sharp edges. The overload on keys, hooks, slings, rings etc. through wrong angle of loading must be avoided.

(vii) Cranes must be earthed while working in the vicinity of the charged OHE line in double or multiple line

section. Proper care must be taken to ensure that the load/boom do not infringe maximum moving dimension of other line(s) which is not blocked.

(viii) Sufficient wooden blocks and packing material must be arranged at site in advance. The working area must be sufficiently leveled for convenient and fast working.

(ix) For completing the work within block period, contractor will provide sufficient cranes to work simultaneously on more than one span. The contractor will submit a detailed scheme as how he/they propose(s) to complete the work of removal of girder and linking of track within the available block period. The duration of block will be decided by the engineer. The panels for new track may have to be kept ready before hand on the ground and may have to be laid by road crane in order to clear the block in time. The linking is payable separately under the relevant SOR item.

(x) No machine shall be selected to do any lifting on a specific job under its size and characteristic are considered against the weights, dimensions and lift radii of the heaviest and largest loads.

(xi) The contractor shall ensure that a valid certificate of fitness is available before use of road cranes.

(xii) Contractor can utilize the service of any competent person as defined in factories Act, 1948 and approved by chief Inspector of factories.

(xiii) The laminated photocopies of fitness certificate issued by competent person, the operator's photo, manufacturer's load chart and competency certificate shall always be either kept in the operator cabin or pasted on the visible surface of the lifting appliances.

(xiv) All lifting appliances including all parts and gears thereof, whether fixed or movable shall be thoroughly tested and examined by a competent person once at least in every six months or after it has undergone any alterations or repairs liable to affect its strength or stability.

19. Special Condition for Supply Items

1. SPECIAL CONDITIONS FOR SUPPLY OF STANDARD STRUCTURAL STEEL WORK

1.1 The scope of this item includes the procurement, fabrication, transportation and erection of the steel members as per the railway's drawings or site requirements or directions of the site in charge of the work. The making of holes, welding, supply of bolts, nuts and washers and painting as per the description given in the item are all inclusive in the scope of work for this item.

1.2 The steel shall be procured from the under mentioned manufacturers or their authorized conversion agents only.

a) SAIL
b) TISCO
c) IISCO
d) VIZAG STEEL
e) RASHTRIYA ISPAT or other Indigenous and Primary producers of steel, having Integrated steel plants (ISP), using iron ore as the basic raw material and having in- house iron rolling facilities, followed by production of liquid steel and crude steel, as per Ministry of steel's guidelines.

1.3 Quality Control

- Steel procured by the contractor for the work shall be conforming to minimum IS 2062 1992 or latest version, Grade 'A'.
- A test certificate with regard to the quality of the steel shall be produced by the contractor from its manufacturers/reputed testing company. If the test certificate is not produced, Railway may get the testing done at contractor's expenses.
- One number independent laboratory test for the metallurgical and structural properties of steel shall be conducted at government engineering college/ reputed institutions at contractor's cost for every 30 MT, or part thereof, of supply of steel under this item. The first test shall be carried out only if supply exceeds 20 MT. However, if there is any doubt regarding the quality of the steel as applied to be used by the contractor, the sample of the steel may be sent to the CMT Workshop, Western Railway, Ajmer for the testing at the Railway's cost.
- One month time shall be made available to Railway in case testing is to be got done by Railway.
- The Railway on the basis of such certificates, as produced by the Contractor, or as per testing got done by Railway, shall decide the suitability of steel. Only after this, the steel shall be allowed to

be used in the works. Any steel that fails in such test(s) shall be promptly removed by the contractor from the site of work.

1.4 The scope of this item includes supply of steel, transportation to the site of work, cutting to proper shape and size, handling at site etc including contractor's own material, T&P, consumables, labor, temporary arrangements, scaffolding etc. The rate is inclusive of all taxes, levies, duties etc leviable on the same as per government rules. The drilling of holes in the concrete/ masonry etc and epoxy grouting the same, if required as per the railway's approved drawing shall be included in the scope of the work in this item.

1.5 Rolled materials before being laid off or worked, must be made straight. If straightening or flattening is necessary, it shall be done by methods that will not damage the material. Material with kinks and bends shall be rejected. Gas cutting will be permitted only with the approval of DEN in charge of the work. The decision of DEN in charge in this regard will be final & binding on the contractor. Edges of steel member shall be required to be ground to proper size and shape. Gas cutting shall be done in the thin members taking adequate care to ensure that the plates do not lose shape due to overheating.

1.6 The steel supplied shall be cut to size & profile as required as per the site requirement, approved drawing and specifications and as directed by the Engineer- in-charge of the work. Where the existing members are to be fabricated for replacement of existing members, proper jigs and fixtures are required to be made. Where direct measurements are not possible due to obstructions such as sleepers, hook bolts, stiffeners, bracing etc, the first member shall be fabricated by taking indirect measurements. Subsequent members shall be made using the released member as jig. The first member shall be paid for even when the same is not possible to be used in the bridge due to incorrect measurements. Such member shall be property of the railway.

1.7 Welding and fabrication work shall be as per IRS B1 and other relevant IS/ IRS codes.

1.8 The rate for the item included all taxes, levies, octroi, royalty, transportation, fabrication, handling, tools, plant, M & P etc. for bringing the steel to site and fabricating by cutting to correct shape and size as per requirement of work.

1.9 The scope of work of the item does not include riveting.

1.10 Unit of measurement is taken as metric tons.

1.11 Paying quantity shall be worked out as under:

Payment against the item shall be made only on the basis of average weight of finally finished item (i.e. cut to the size items) without any deduction for holes made in the members as per drawing. The weight shall be taken from standard steel tables.

1.12 Nothing shall be paid for the unused waste pieces of steel sections.

Earth work in Back filling

Instructions given by CBE as per letter no. WR-HQ0ENGG (WRPO)/2/2020 (44656) on dated 03.07.2023.were issued for pushing of RUBs/RCC Box type bridges across existing railway line by pushing RCC Boxes under relieving girders or by cut & cover method. However, settlement of track on approaches of subway/railway bridges takes place inadvertently during heavy rains due to consolidation of fill material leading to imposition of caution orders or suspension of track and has serious safety implications following instructions are issued for implementation in the field

1. Future works shall be planned with filling of approaches with granular materials in line with GE: R-50 (Revision-I) -Transition system on approaches of bridges (Revision-I), modified suitably as Annexure1 to 3.

2. Proper compaction of backfill to be done and requisite machinery to be ensured for deployment at site.

3. Adequate water supply to be ensured for compaction of backfill material.

4. As the compaction of proposed granular material is much more effective with vibratory input process, a run of DGS may be done over the newly laid approach for quick and effective compaction.

ANNEXURE 1

2. BOX PUSHING WITH RH GIRDER. (SKETCH SHOWING BACK FILL MATERIAL AFTER REMOVAL OF R.H. GIRDER)

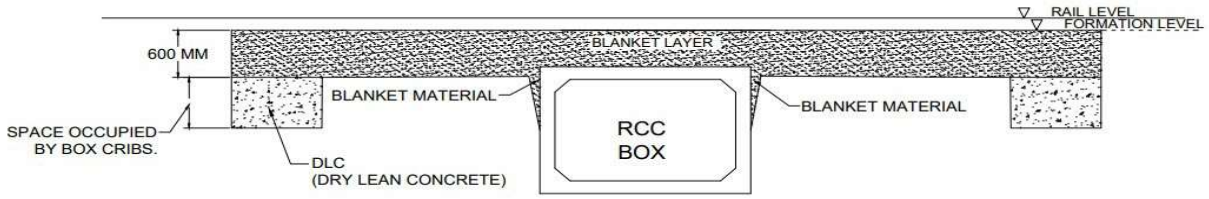

ANNEXURE 2

1. BOX TO BE PROVIDED BY CUT & COVER METHOD

-BACK FILLING AT APPROACHES OF BOX.

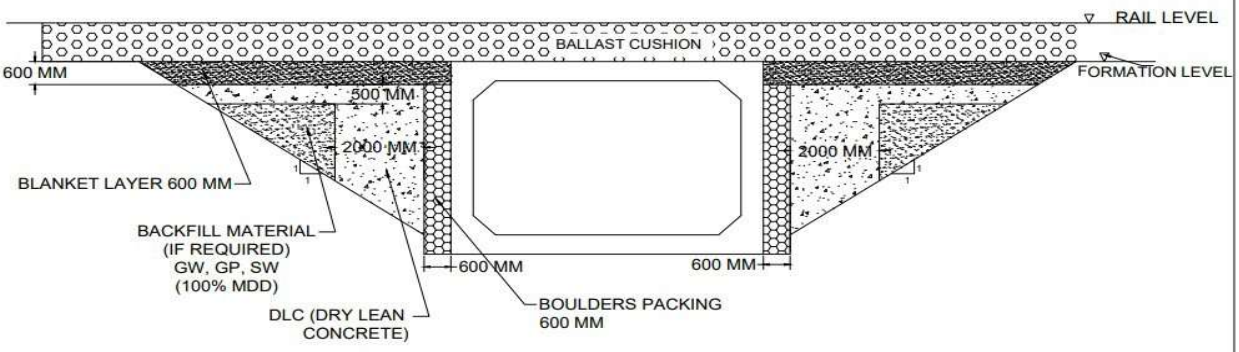

1. BOX TO BE PROVIDED BY AIR PUSHING METHOD (IN CASE OF ROCK)

ANNEXURE 3

-BACK FILLING AT APPROACHES OF BOX.

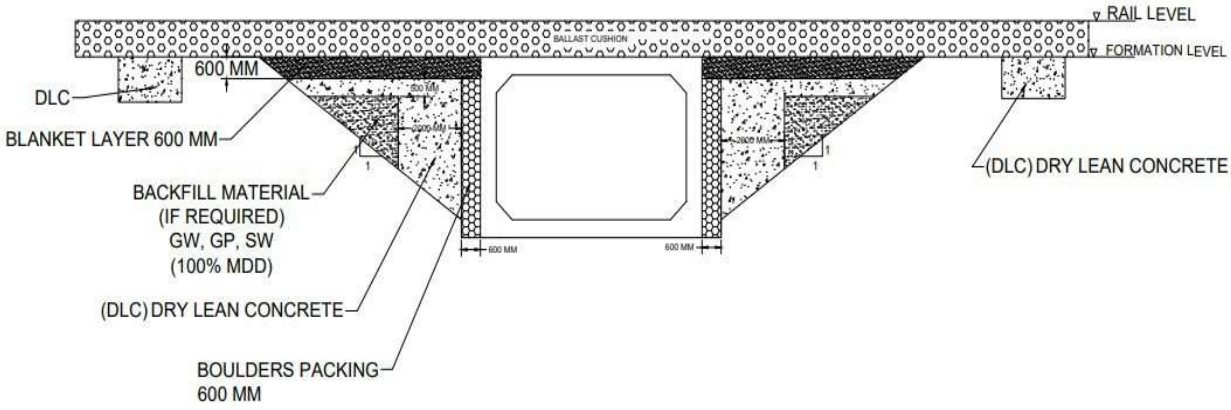

- **Contractor must use blanketing material for approach filling if any.**
- **If a contractor fails to use blanketing material for approach filling as specified in the tender, they will incur a penalty of 5% of the total tender value. This penalty is applied as a consequence for not adhering to the agreed-upon specifications outlined in the tender.**

Special condition and specifications for supply of ballast: -

The ballast shall be supplied as per RDSO Specification and PCE circular along with the latest amendments and work is to be carried out as per all the policy and day to day policy circulars. Specification of ballast supply is attached separately as Annexure-A.

Mode of payment of ballast: -

-80% payment shall be made at stack measurement recorded in Measurement book and remaining

-20% payment made after the putting of ballast in track/site of work.

As per railway Board's letter No.2007/CE-II/MB/1 dated 30.12.2019, for tenders of mixed work and EPC tenders, as per provision in Para 3.1 of "Specification of Track Ballast, IRS-GE-1, June 2004" "Test report is not mandatory at the time of tendering". It shall be submitted by successful tenderer before start of supply of ballast from Railway's approved LAB.

System Improvements:

I. Authority: - PCE- CCG's letter No.W/562/1 Misc (W6) dated 03.07.2019

- In case of any ambiguity between the plans and site conditions etc., decision of the Engineer-in-charge shall be final and binding on the contractor.

II. (Authority: -PCE-CCG's letter No. WR-HQENGG(WWTC)/2/2021/E-426740 dated 08.02.2024.)

- IN CASE S&T OR ELECTRICAL CABLE FOUND AT WORKING SITE THAT SHOULD BE TEMPORARY SHIFTED BY AGENCY WITH THEIR OWN COST AS DIRECTED BY SITE INCHARGE. IF CABLE CANNOT BE SHIFTED THEN EXCAVATION AT THAT LOCATION NEED TO BE DONE MANUALLY TO AVOID DAMAGE TO CABLES, AS PER DIRECTION OF SITE ENGINEER INCHARGE. NO EXTRA PAYMENT WILL BE DONE FOR SHIFTING OF S&T AND ELECTRICAL CABLE AT WORKING SITE.

III. Approval of Concrete Design Mix as per PCE Circular No.81.

IV. Modified System improvement regarding material invoices submitted by agencies- The original invoice of material should be obtained to ensure traceability & usage for each and every material component (including, steel, cement, etc.)".

V. Original invoices of cement/steel/other material etc with details such as agency, name of project, site location, GST details etc should be complied by Railway Engineer-in-charge & ADEN before passing the bill.

VI. Type Plan for shuttering arrangement

*****END OF SPECIAL CONDITIONS*****

1

Office of the,
Principal Chief Engineer
Western Railway HQ
Churchgate,
Mumbai-400 020

No. W65/3(Policy)E403 Date: 15.01.2025
WR-HQ0ENGG(WBPQ)/3/2019

Sr.DEN(Co)MMCT, BRC,ADI, RTM, RJT & BVP.
Dy CE (Br Line)-DDR/BRC/ADI

Sub: Type Plan for shuttering arrangement for RCC Box Structures

Ref: Railway Board letter No.2023/CE-IV/Misc Dtd 10.08.2023 (Copy Enclosed)

Railway Board's vide letter under Ref had issued instructions regarding precaution and safety at ROB/RUB/Bridge work site. Railway Board has stipulated that "Contractor shall furnish the design and drawing of complete form work (i.e. the forms as well as their supports) for approval of the Engineer before any erection is taken up. However, it is noted that, aside from some significant PSC Box Girder bridges, the form work design is typically not approved by the Engineer and monitoring & execution of this activity are left to the judgement of the shuttering subcontractor/workers. This is not only a violation of the condition of contracts but also unsafe for the work site".

Considering above facts and for ease & guidance of field units, this office has already issued Type Plan No TP BR-89/2022-HQ for standard shuttering arrangement for RCC Box Structures (Copy Enclosed). Further, standard shuttering arrangement for casting of RCC slab (single floor height upto 3.5 m and double floor height upto 6.0 m) has also been developed and is enclosed herewith for reference and adoption in field.

In view of above, all units are requested to please note and follow above type plan for shuttering arrangement for RCC Structures.

Encl: As above

Digitally Signed by Prem Sagar (Prem Sagar)
Date: 16-01-2025 12:49:04
Reason: Approved
Dy. Chief Engineer (Br)HQ

9.

GOVERNMENT OF INDIA (BHARAT SARKAR)
MINISTRY OF RAILWAYS (RAIL MANTRALAYA)
(RAILWAY BOARD)

No. 2023/CE-IV/Misc. **New Delhi, dated 10.08.2023**

Principal Chief Engineers,
All Zonal Railways.

Chief Administrative Office,
All Zonal Railways.

Sub: Precaution and Safety at ROB/RUB/Bridge work sites.

Recently, on one of the Railways, formwork collapsed while concreting, resulting in the death of one worker. Similar accidents of various severities have been reported repeatedly as a result of formwork failures. The importance of the formwork system in the construction sector for the building of reinforced concrete structures is once again stressed. Failures in the formwork system increase the cost, time, and labor needed for construction in addition to losing credibility as an institution.

Vide letter No. 2020/CE-I/USSOR/W&M/I dated 05.07.2022, Board has issued Indian Railways Unified Standard Schedule of Rates' (IR-USSOR-2021), along with specifications for execution of Bridges works, Formation works and P.Way works. Relevant Para of USSOR specifications 2021 regarding shuttering/formwork design is re-iterated hereunder:-

Para no. 2.10.2 Material and Design: ***The Contractor shall furnish the design and drawing of complete form work (i.e. the forms as well as their supports) for approval of the Engineer before any erection is taken up).***

From the above, it is evident that all sorts of Form work design should be approved by the Engineer. However, it is noted that, aside from some significant PSC Box Girder bridges, the form work design is typically not approved by the Engineer, and monitoring & execution of this activity are left to the judgment of the shuttering subcontractor/workers. This is not only a violation of the conditions of contracts but also unsafe for the work sites.

As such it is again reiterated that USSOR specifications w.r.t form work should be strictly adhered.

Beside this followings precautions should also be ensured:-

1. **Proper Stripping and Shore Removal**:-Early striping of forms and careless practices in re-shoring should be avoided
2. **Inadequate Bracing:-**Poor bracing generates lateral force and hence creates lateral deformation of supporting members as such it should be avoided.
3. **Inadequate Control of Concrete Placement: -** Improper rate and order of placing concrete on horizontal formwork introduce unbalanced loadings and consequent failures of formwork. This should be avoided.

10-08-23

4. **Inadequate Concrete Strength Development:-** It must be ensured before next lift of concrete, applicable for slip-form shuttering or climb shuttering.
5. **Vibration and Impact:** Vibration and impact due to passing traffic, movement of workers and equipment on formwork, can displace supporting props or jacks of formwork system as such it should be controlled.
6. **Unstable Soil under Mudsills and Out of Plumb Shores:** Unstable soil and out of plumb shores are another factor that jeopardize the stability of the formwork system. It must be accounted for while approving formwork design.
7. **Lack of Attention to Formwork Details:** Assemblage errors such as insufficient nailing, failure to tighten the locking devices on metal props, demands of skilled workmanship for an effective and safe formwork. It must be ensured.

10-08-23

(L. L. Meena)
Director Civil Engg./ B&S-II
Railway Board

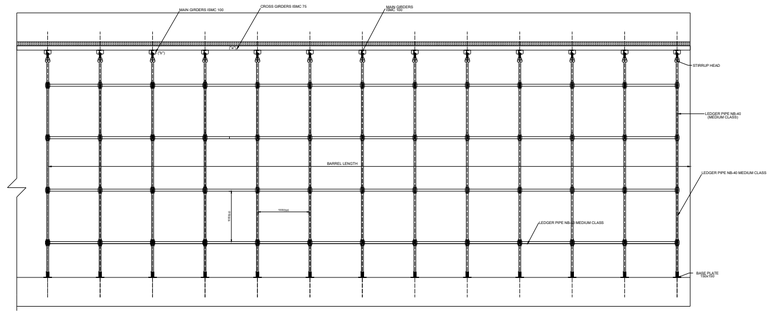

CROSS-SECTION VIEW (SCALE-1:70)

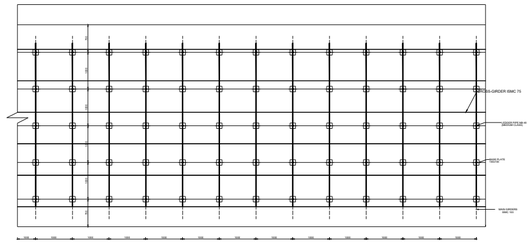

TYPICAL PLAN OF CENTERING(SCALE-1:70)

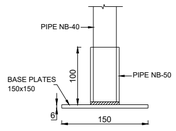

DETAIL C

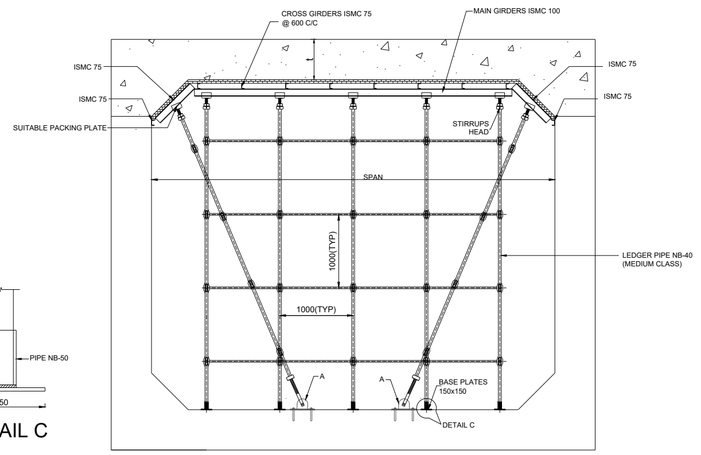

ELEVATION VIEW (SCALE-1:20)

NOTES:-

1. ALL DIMENSION ARE IN MILLIMETERS EXCEPT OTHERWISE STATED.
2. M30 GRADE CONCRETE SHALL BE USED FOR ANCHOR BLOCK.
3. BEARING CAPACITY OF FOUNDATION SOIL SHALL BE ASCERTAINED IN TERMS OF PARA 6.3 OF IRS BRIDGE SUBSTRUCTURE AND FOUNDATION CODE. SBC OF SOIL SHOULD BE GREATER THAN 15 T/M2.
4. ANCHOR BOLT SHALL BE 18MM DIA BOLTS WHEREVER NOT SPECIFIED.
5. ALL STEEL STRUCTURAL MEMBERS SHALL BE OF GRADE E250 CONFORMING TO IS 2062.
6. STEEL CLAMPS & COUPLERS SHALL CONFORM TO IS 2750.
7. NB PIPES SHALL CONFORM TO IS 1161-1998.
8. THE DESIGN OF SHUTTERING ARRANGEMENT IS AS PER IS 14687-1999.
9. DESIGN DATA-

(i) MAXIMUM RATE OF CONCRETE POUR=2 M/HR
(j) MINIMUM TEMPERATURE CONSIDERED =25 DEGREE CELSIUS
(k) THICKNESS OF RCC SLAB TOP(t) UPTO 650 MM
(l) WIDTH OF RCC WALL(b) UPTO 650MM

10. SHUTTERING PLATES TO BE JOINED TOGETHER WITH 12 DIA BOLTS.
11. THE CONCRETE BLOCK OF 400X400X300 IN M30 TO BE CASTED FOR ANCHORING THE INCLINED SUPPORT IN SOIL.
12. SHUTTERING PLATES SHALL BE COATED WITH APPROVED FORM RELEASE AGENT BEFORE EACH USE.
13. ALL SHUTTERING JOINTS TO BE SEALED PROPERLY TO PREVENT LEAKAGE OF MORTAR & CONCRETE SLURRY.
14. THE PROPS & BRACING SHALL BE WATCHED DURING PLACEMENT OF CONCRETE & ITS VIBRATION.
15. STRIPPING OF FORMWORK:

(a) VERTICAL FORMWORK TO COLUMNS, WALLS- 24 TO 48 HRS
(b) SOFFIT FORMWORK TO SLABS(PROPS LEFT UNDER)- 7 DAYS
(c) PROPS TO SLAB
(i) SPANING UPTO 4.5 M - 7 DAYS
(ii) SPANING OVER 4.5M - 14 DAYS

16. TOLERANCE IN FINISHED CONCRETE BRIDGE STRUCTURE

(a)	SHIFT FROM ALIGNMENT	± 25MM
(b)	DEVIATION FROM PLUMB FOR EXPOSED FACE OF WALL	1 IN 250, SUBJECT TO MAXIMUM VALUE OF 0.05 TIMES LEAST LATERAL DIMENSION OF WALL
(c)	DEVIATION FROM PLUMB FOR BACKFILLED FACE OF WALL	1 IN 125
(d)	CROSS-SECTION DIMENSION OF WALL	-5MM +20MM
(e)	THICKNESS OD DECK SLAB OF RCC BOX	+6 MM -3 MM

17. THE INSPECTION PLATFORM ARRANGEMENT SHALL NOT INTERACT WITH SHUTTERING ARRANGEMENT PROPOSED.
18. THE INSPECTION PLATFORM ARRANGEMENT IS TO BE FINALIZED BY Sr.DEN AS PER SITE CONDITION.

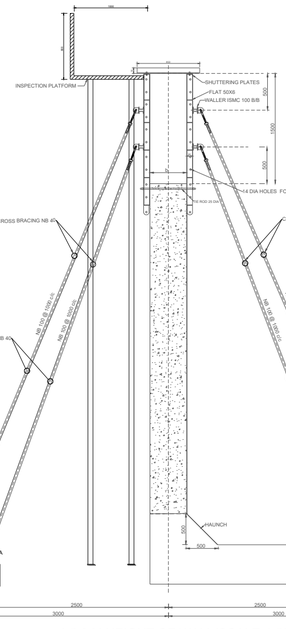

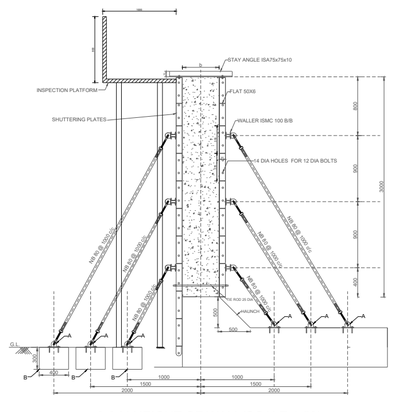

0-3 M HEIGHT OF WALL(SCALE-1:50)
SECTIONAL VIEW

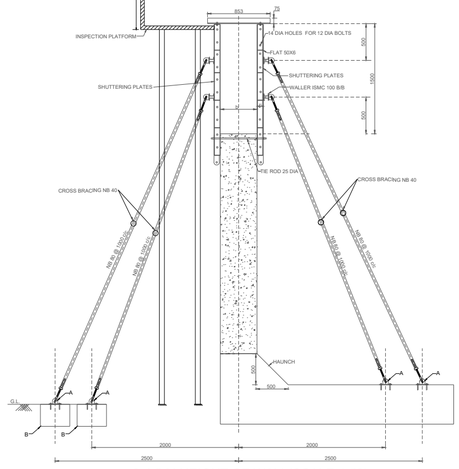

3-4.5 M HEIGHT OF WALL(SCALE-1:50)
SECTIONAL VIEW

4.5-6 M HEIGHT OF WALL(SCALE-1:50)
SECTIONAL VIEW

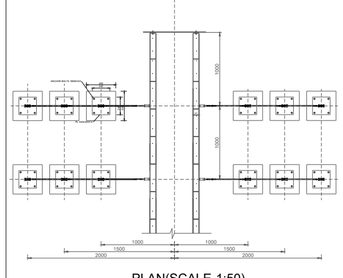

PLAN(SCALE-1:50)

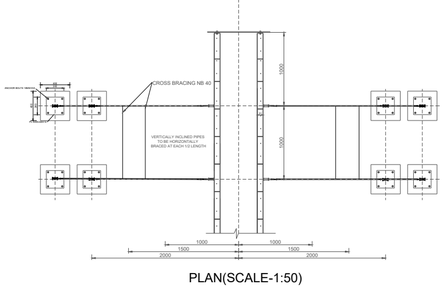

PLAN(SCALE-1:50)

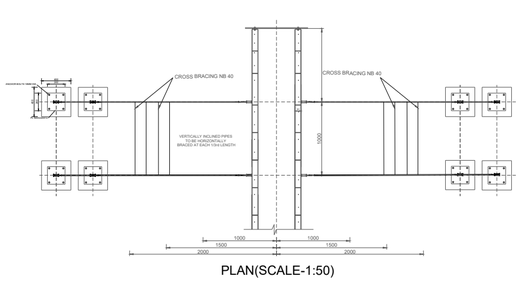

PLAN(SCALE-1:50)

INCLINED PROPS ARRANGEMENT DETAIL (SCALE-1:50)

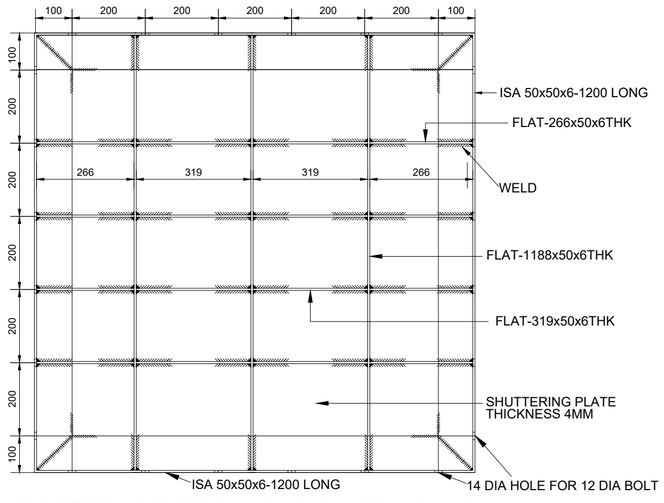

SHUTTERING PLATES 1200x1200X4 (SCALE-1:10)

ON TRIAL BASIS

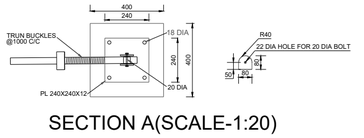

SECTION A(SCALE-1:20)

SCALE IN MM

0 10 20 30

WESTERN RAILWAY	
TITLE:- TYPE PLAN FOR SHUTTERING ARRANGEMENT FOR RCC STRUCTURES	
Signature block	
CBE-CCG	
DYCE-DESIGN-CCG	HIMANSHU SHARMA Digitally signed by HIMANSHU SHARMA Date:2022.07.04 03:42:31 +05'30'
XEN-DESIGN-CCG	TANUJ GUPTA Digitally signed by TANUJ GUPTA Date:2022.07.02 07:44:17 +05'30'
SSE-DESIGN-II-CCG	ASHUTOSH SONI Digitally signed by ASHUTOSH SONI Date:2022.07.01 06:37:17 +05'30'
PCE NO. TP BR-89/2022-HQ	

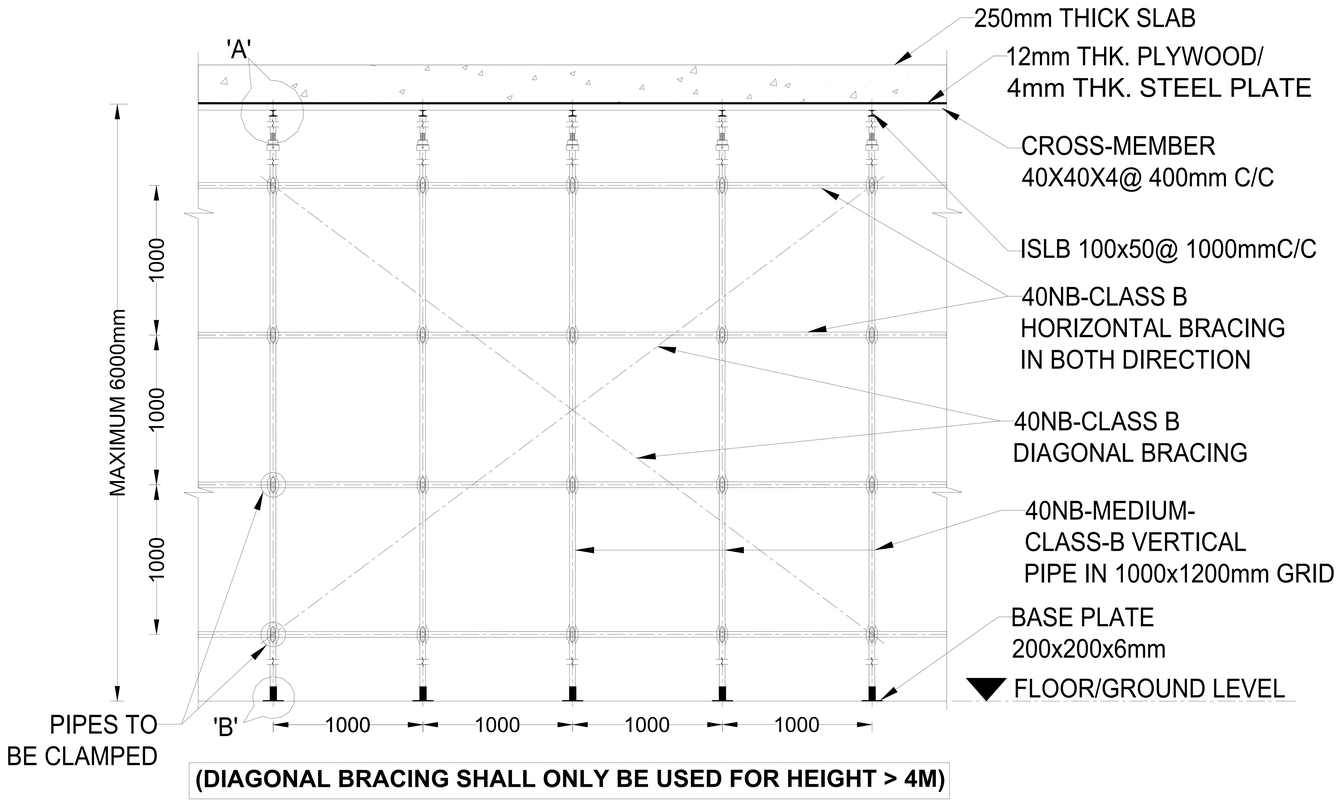

(DIAGONAL BRACING SHALL ONLY BE USED FOR HEIGHT > 4M)

ELEVATION

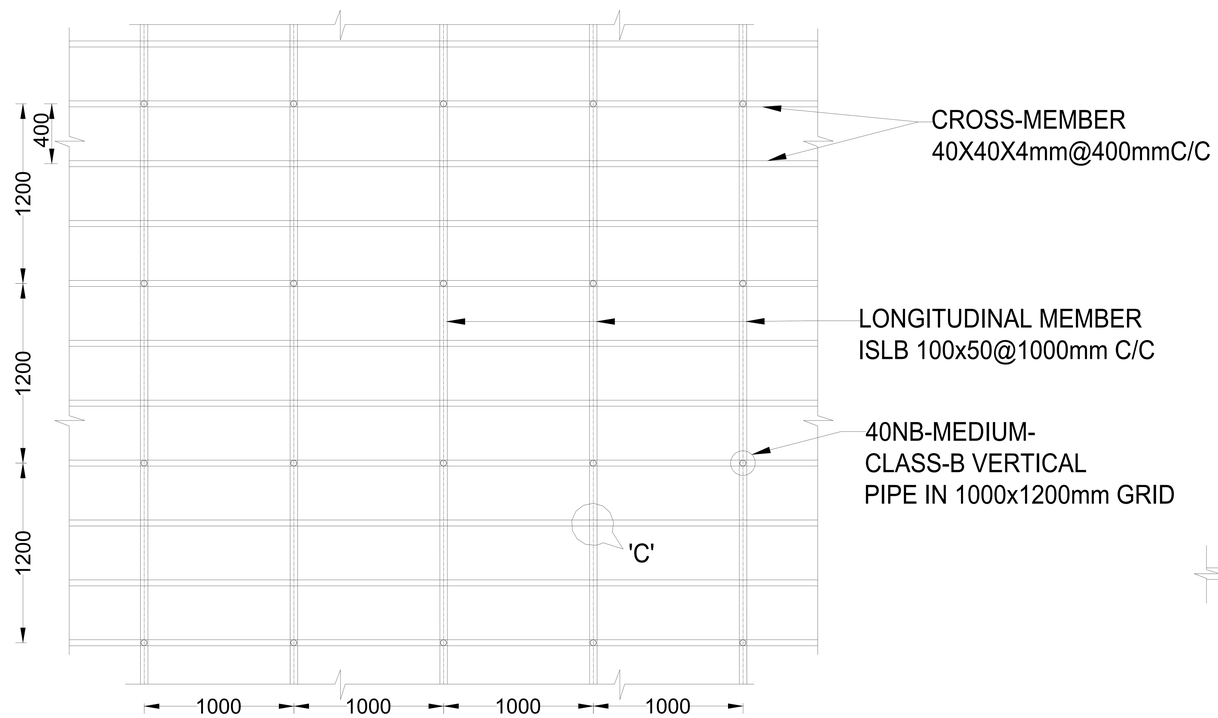

PLAN

GENERAL NOTES:-

1. ALL DIMENSION ARE IN MILLIMETERS EXCEPT OTHERWISE STATED.
2. ALL STEEL STRUCTURAL MEMBERS SHALL BE OF GRADE E250 CONFORMING TO IS 2062.
3. NB PIPES SHALL CONFORM TO IS 1161-1998.
4. STEEL CLAMPS & COUPLERS SHALL CONFORM TO IS 2750.
5. **DESIGN DATA-**

(i) THICKNESS OF RCC SLAB IS ASSUMED AS 250 MM.

(ii) LIVE LOAD CONSIDERED 200 KG/M2

(iii) PROPERTIES OF PLYWOOD:-

(a) MINIMUM BENDING STRENGTH 120 KG/CM2

(b) WEIGHT OF PLYWOOD CONSIDERED AS 30 KG/M2

6. THIS SHUTTERING ARRANGEMENT CAN BE USED UP TO 6M CLEAR HEIGHT BY REPEATING THE GRID OF 1M X 1M VERTICALLY.

DOs & DON'Ts

7. SHUTTERING PLATE/PLYWOOD SHALL BE COATED WITH APPROVED FORM RELEASE AGENT BEFORE EACH USE.
8. ALL SHUTTERING JOINTS TO BE SEALED PROPERLY TO PREVENT LEAKAGE OF MORTAR & CONCRETE SLURRY.
9. THE PROPS & BRACING SHALL BE WATCHED DURING PLACEMENT OF CONCRETE & ITS VIBRATION.
10. SHUTTERING COMPONENTS' HORIZONTAL LEVEL & VERTICALITY OF PROPS SHALL BE CHECKED & CONFIRMED BY AEN/XEN IN-CHARGE BEFORE CONCRETING.
13. THE SCAFFOLDING ARRANGEMENT SHOULD BE ENSURED TO REST ON FIRM, STABLE & LEVEL BASE TO ENSURE VERTICALITY OF THE PROPS.
14. IF ANY PACKING PLATE IS USED, IT SHOULD BE FIXED BELOW THE BASE OF THE SHUTTERING ARRANGEMENT & NOT AT THE TOP.
15. AFTER ERECTION OF THE ARRANGEMENT, TIGHTNESS OF THE BOLTS TO BE ENSURED BEFORE CONRETING.
16. AFTER DISMANTLING, INSPECTION OF THE ASSEMBLY TO BE CARRIED OUT FOR DAMAGES. BUCKLED / DISTORTED / RUSTED MEMBER WITH OBLONGATED HOLES MUST BE REJECTED & REPLACED. COLOUR CODED MARKING TO BE IN PLACE TO IDENTIFY AND DISTINGUISH BETWEEN USABLE AND NON-USABLE COMPONENTS.
17. THE JOINTS OF THE TUBES & PIPES SHOULD BE PROPERLY LUBRICATED AT REGULAR INTERVALS TO PREVENT JAMMING.
18. ALL DETAILING OF THE ARRANGEMENT INCLUDING MEMBER SIZES, SPACING ETC. SHOULD BE STRICTLY COMPLIED WITH. NO DEVIATION IN THE MEMBERS IS PERMITTED.
19. IN NO CIRCUMSTANCE THE HEIGHT OF SCAFFOLDING SHOULD EXCEED 6M. TWO SETS OF CROSS TIES TO BE EMPLOYED WHEN SCAFFOLDING HEIGHT EXCEEDS 4M.
20. DO NOT USE THIS ARRANGEMENT IF THE SLAB THICKNESS IS OVER 250MM
21. SHUTTERING TO BE REMOVED ONLY AFTER THE PRESCRIBED TIME LIMIT FOR VARIOUS MEMBERS AS PER IS 456. CLAUSE 11.3
22. SEQUENCING OF DISMANTLING OF THE PROPS FROM TOP TO BOTTOM.
23. CONCRETING TO BE DONE AS PER THE APPROVED CONCRETE POUR PLAN.
24. PROPER SAFETY GEARS TO BE ENSURED FOR WORKERS WHILE ERECTING SHUTTERING, CONCRETING AND DISMANTLING THE SHUTTERING ARRANGEMENT.

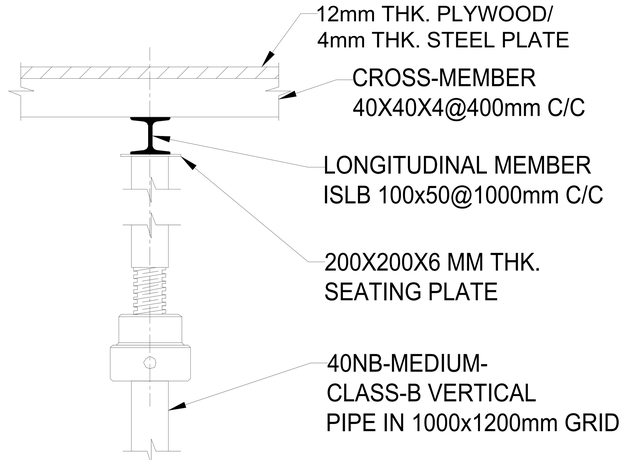

DETAIL 'A'

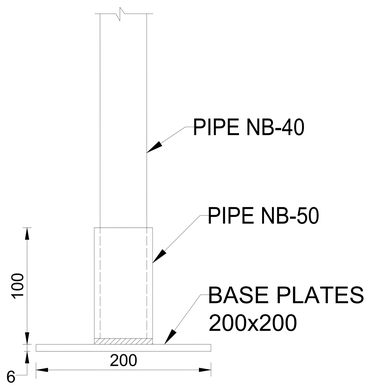

DETAIL 'B'

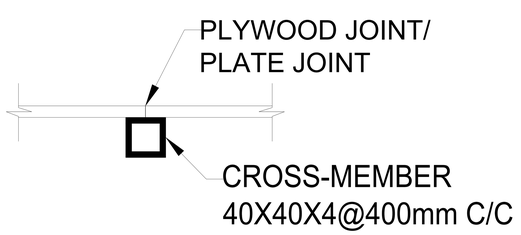

JOINT DETAIL AT 'C'

WESTERN RAILWAY

TYPE PLAN OF SHUTTERING ARRANGEMENT FOR 250MM THICK RCC SLAB

Signature block		
DYCE-DESIGN-CCG	HIMANSHU SHARMA	Digitally signed by HIMANSHU SHARMA Date: 2025.01.24 16:23:22 +05'30'
XEN-DESIGN-CCG	ADARSH SAPRE	Digitally signed by ADARSH SAPRE Date: 2025.01.24 17:04:01 +05'30'
SSE-DESIGN-IV-CCG	RISHI KUMAR GARHEWAL	Digitally signed by RISHI KUMAR GARHEWAL Date: 2025.01.24 14:19:04 +05'30'

TYPE PLAN NO. :- **TP BR-112 2025 HQ**