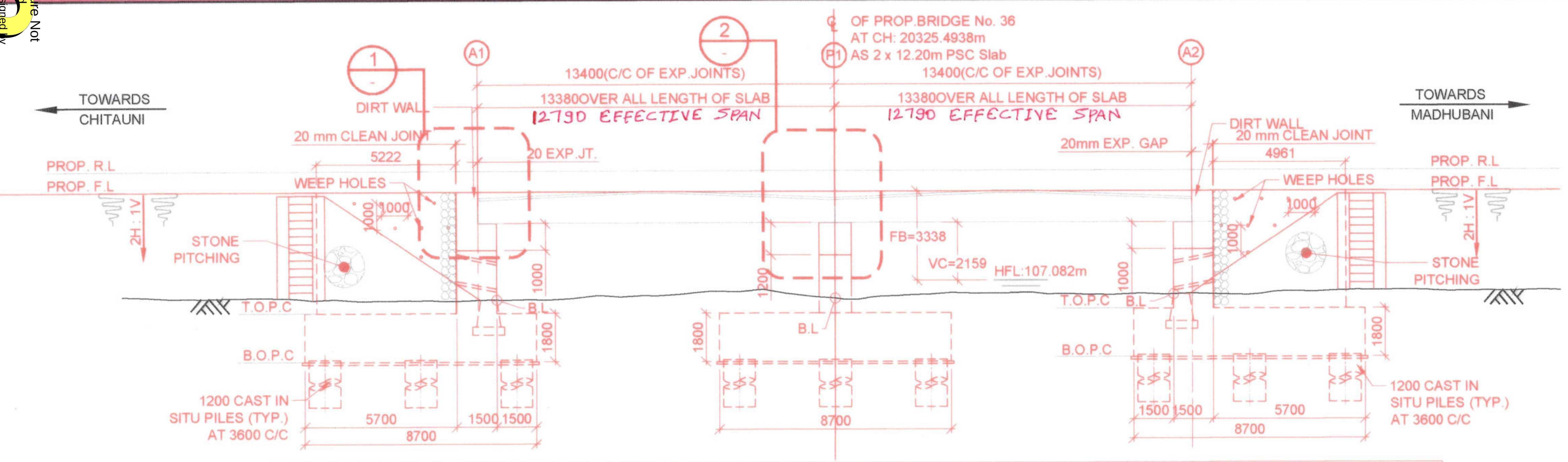

	A1	P1	A2
PROP. RAIL LEVEL (m)	111.182	111.182	111.182
PROP. FORMATION LEVEL (m)	110.420	110.420	110.420
BED LEVEL (m)	106.395	106.432	106.568
TOP OF PILE CAP (m)	105.895	105.932	106.068
BOTTOM OF PILE CAP (m)	104.095	104.132	104.268

ELEVATION
SCALE 1:150

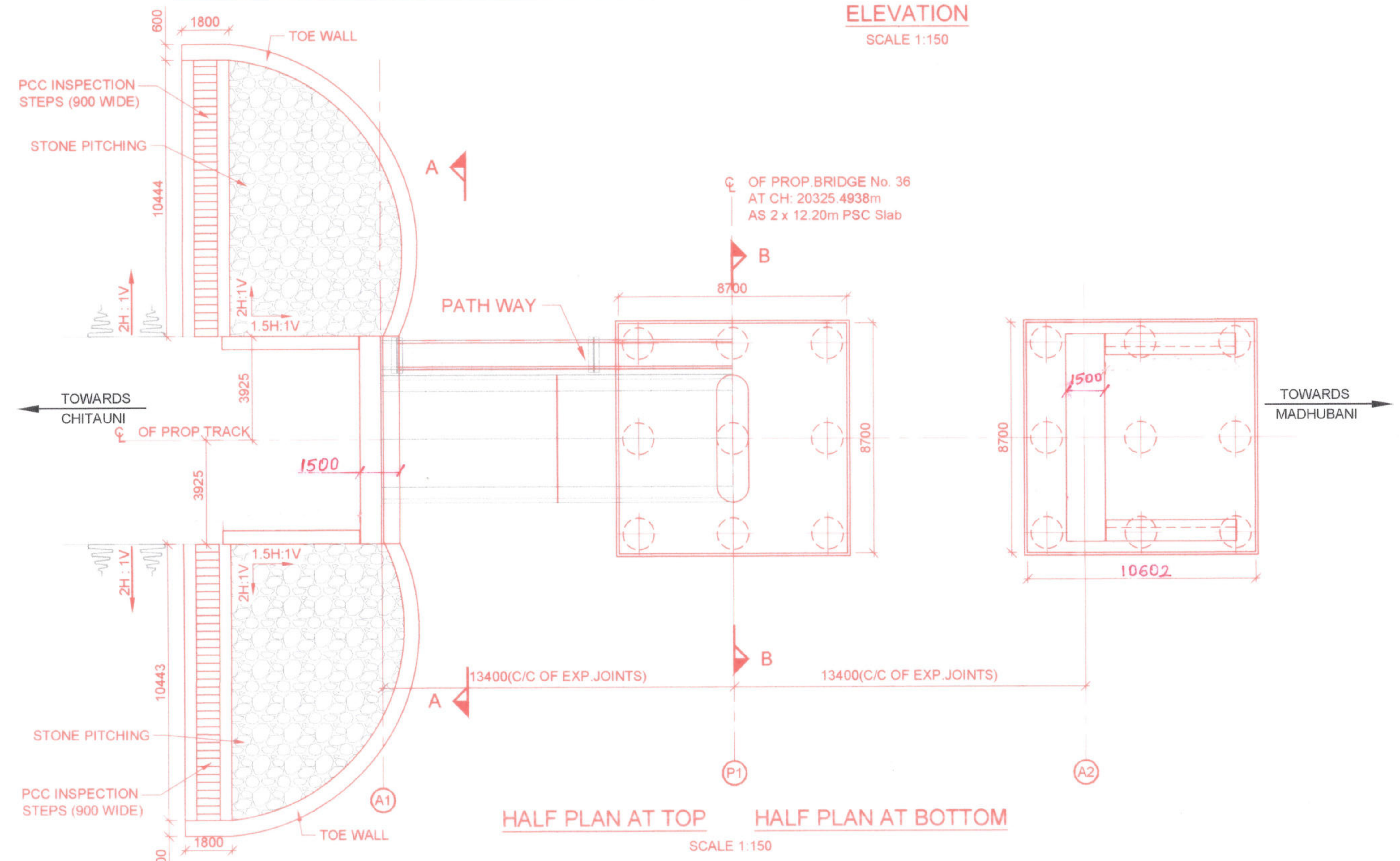

HALF PLAN AT TOP HALF PLAN AT BOTTOM
SCALE 1:150

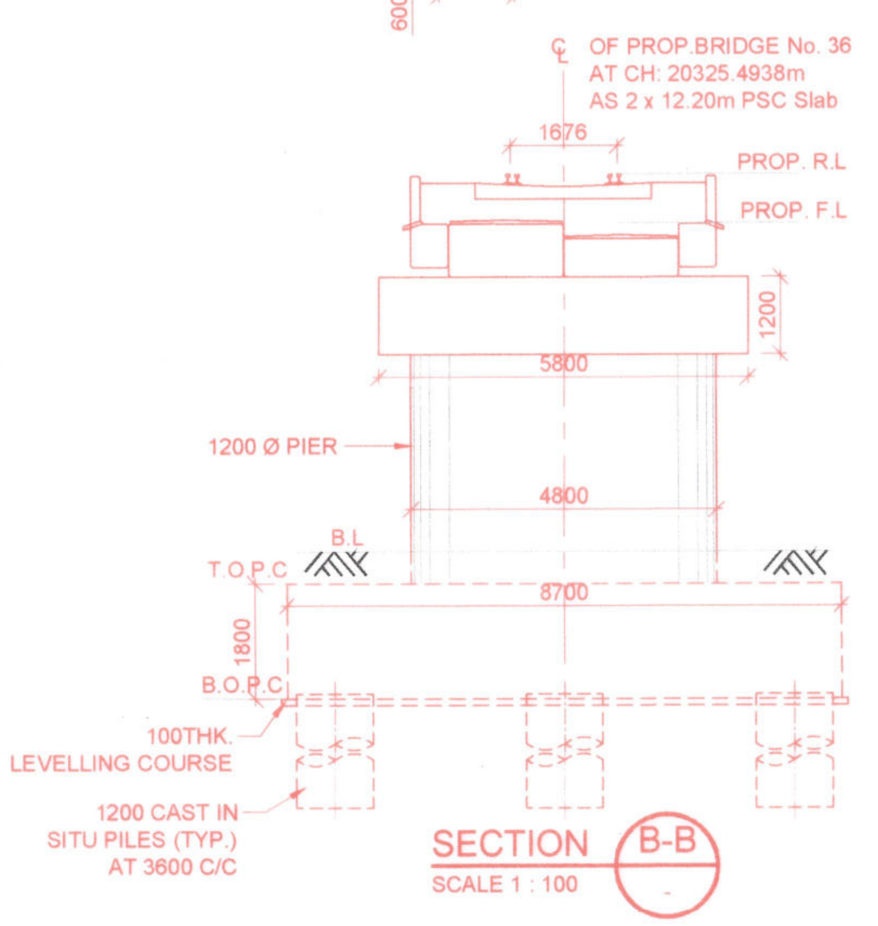

SECTION B-B
SCALE 1 : 100

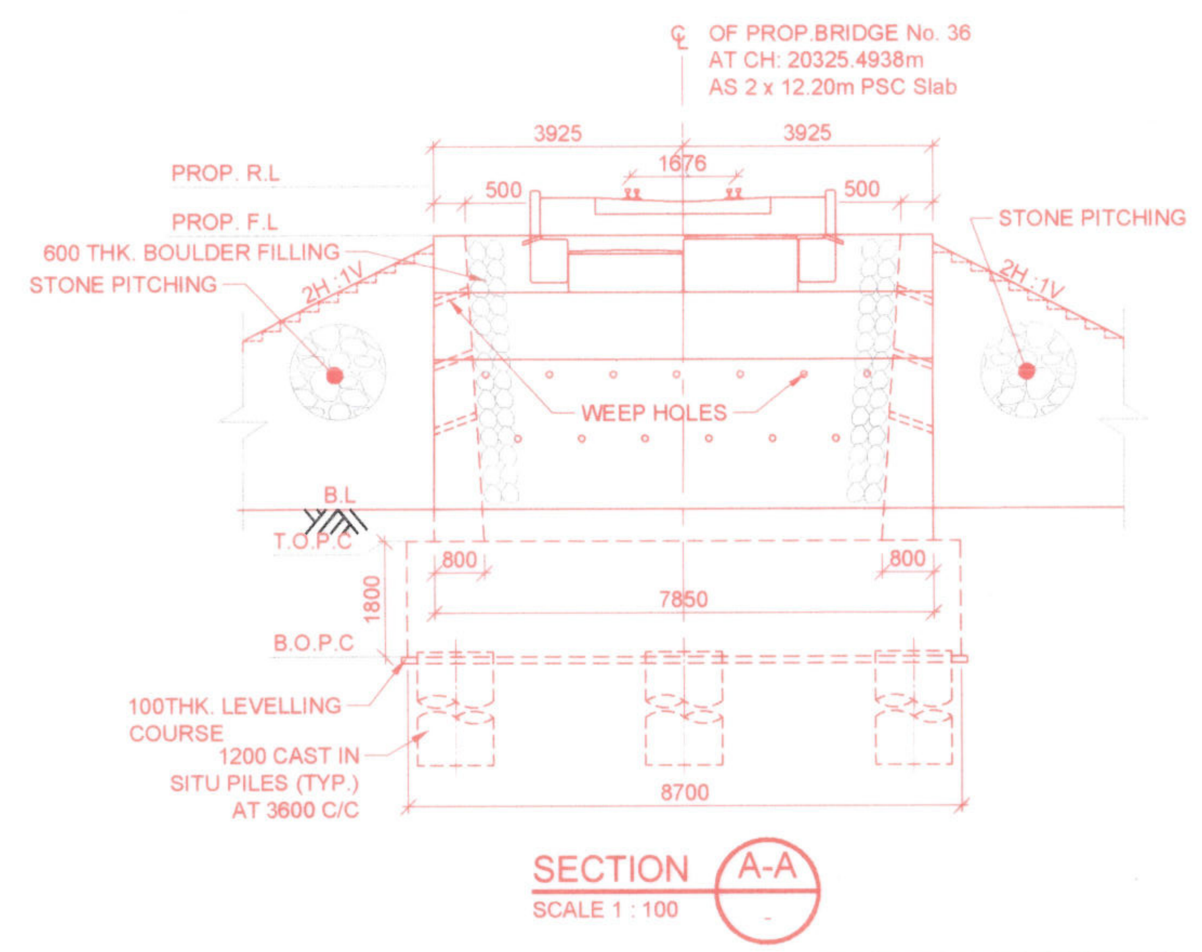

SECTION A-A
SCALE 1 : 100

BR. NO	PROPOSED BRIDGE SPAN	PROPOSED RAIL LEVEL (M)	PROPOSED FORMATION LEVEL (M)	BED LEVEL	HFL IN (M)	HEIGHT OF BANK	VERTICAL CLEARANCE IN MM		WATER DEPTH (mm)	DISCHARGE IN CUMECS	FREE BOARD IN MM	
							PROVIDED	REQUIRED			PROVIDED	REQUIRED
36	2 X 12.20 PSC SLAB	111.182	110.420	106.395	107.082	4025	2159	1200	687	10.796	3338	1200

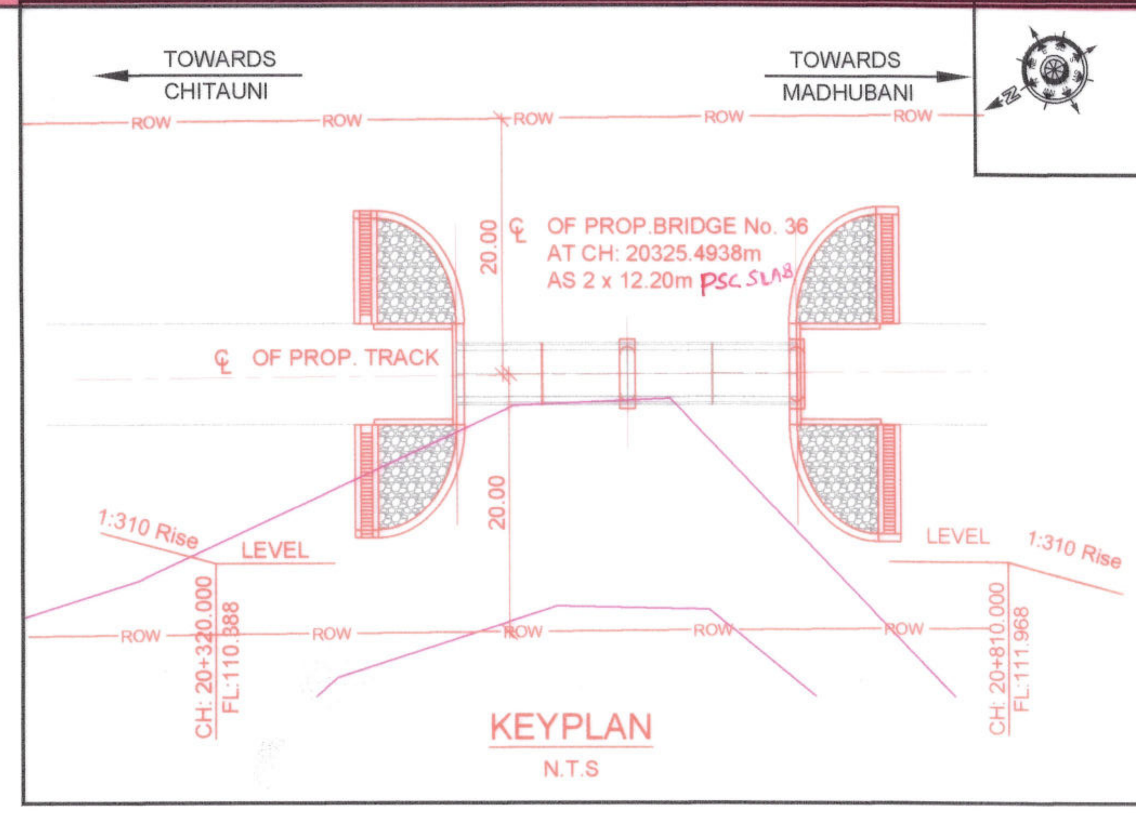

KEYPLAN
N.T.S

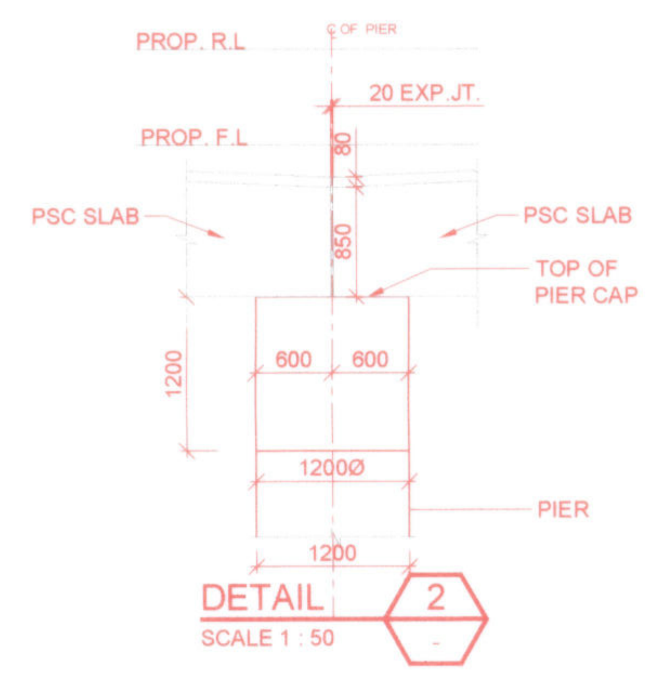

DETAIL 2
SCALE 1 : 50

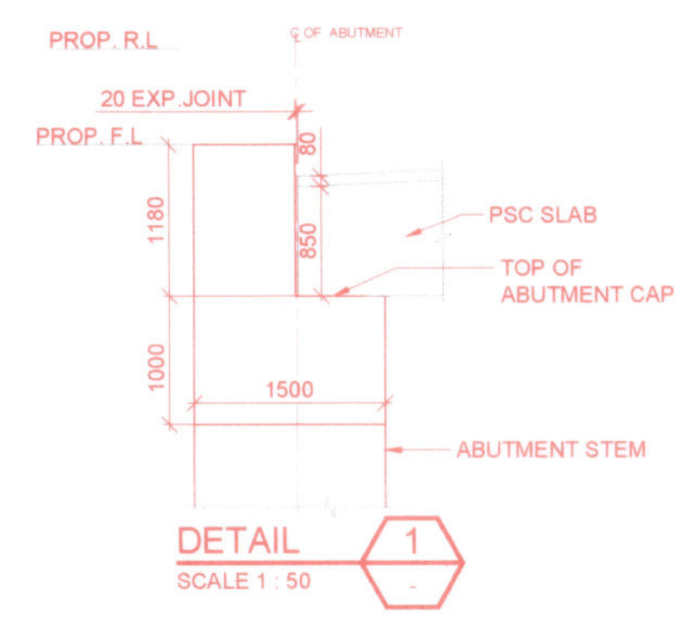

DETAIL 1
SCALE 1 : 50

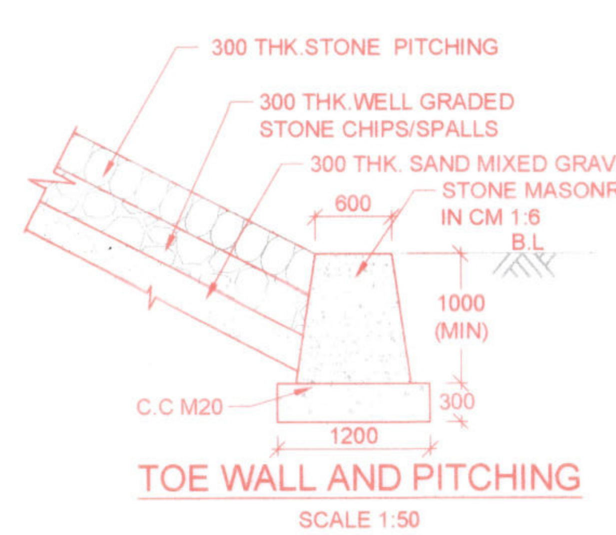

TOE WALL AND PITCHING
SCALE 1:50

AUTHORITY OF WORK
PINK BOOK- 2024-25
PAGE NO.-4:2:1
ITEM NO. - 14

BOREHOLE PROFILE
SECTION: CHITAUNI TO MADHUBANI
Bore Hole Terminated at : 40.45M.

DEPTH (M)		SPT N-VALUE	DESCRIPTION OF SOIL	IS CLASSIFICATION
0.00	1.5	6	SM	MEDIUM DENSE LITE GRAY, SILTY SAND (SM)
1.5	3.0	8		
3.0	4.50	10		
4.50	6.00	12		
6.00	7.50	14		
7.50	9.00	16		
9.00	10.50	17		
10.50	12.00	21		
12.00	13.50	25		
13.50	15.00	22		
15.00	16.50	26		
16.50	18.00	31		
18.00	19.50	29		
19.50	21.00	39		
21.00	22.50	45		
22.50	24.00	54		
24.00	25.50	59		
25.50	27.00	52		
27.00	28.50	62		
28.50	30.00	67		
30.00	31.50	73		
31.50	33.00	79		
33.00	34.50	86		
34.50	36.00	94		
36.00	37.50	100		
37.50	39.00	100		
39.00	40.00	100		

BRIDGE NO.: 36
BOREHOLE NO.: 01

NOTE:-
1. PROPOSED WORKS SHOWN RED.
2. ALL DIMENSIONS ARE IN mm & ALL LEVELS ARE IN METER'S UNLESS OTHERWISE SPECIFIED.
3. MINIMUM GRADE OF CONCRETE TO BE FOLLOWED :
(a) BED BLOCK - M35
(b) ABUTMENT/PIER - M30
(c) PILE CAP - M35c
(d) PILE - M35
4. THE DESIGN BASED ON FOLLOWING CODE WITH LATEST CORRECTION SLIPS.
(a) IRS BRIDGE SUBSTRUCTURE AND FOUNDATION CODE.
(b) IRS BRIDGE RULES.
(c) IRS CONCRETE BRIDGE CODE.
(d) IS: 456-2000.
(e) IS 2911-2010 PART-1-SECTION-2.
5. ALL THE CONCRETE SHALL BE DESIGNED MIXED CONTROLLED CONCRETE AS PER I.R.S CONCRETE BRIDGE AND IS 456-2000.
THE CRUSHING STRENGTH OF CONCRETE SHALL BE AS PER CRITERIA SPECIFIED IN I.R.S CONCRETE BRIDGE CODE AND IS 456-2000.
6. FOR SUPER STRUCTURE DRAWING RDSO/B-10271/R AND ALL THE RELATED DRAWINGS.
7. INSPECTION LADDERS AREA TO PROVIDED ON PIERS / ABUTMENTS AS PER SPECIFICATION ,FOR ACCESS TO BED BLOCKS FOR INSPECTION.
8. REINFORCEMENT SHALL BE OF HIGH STRENGTH DEFORMED BARS CONFORMING TO IS:1786.
9. ONLY ONE TYPE OF CEMENT & STEEL WILL BE USED ON A PARTICULAR BRIDGES AND BRAND OF CEMENT AND STEEL SHOULD BE APPROVED BY DY. CE /CON OF THE PROJECT.
10. DIMENSIONS GIVEN IN THIS DRAWING MUST BE RECONCILED AT SITE BEFORE START OF THE WORK FOR FEASIBILITY.
11. CONTROLLED CONCRETE/DESIGN MIX CONCRETE WITH WEIGHT BATCHING OR AUTOMATIC WEIGHT BATCHING WITH PAN MIXTURE IF APPLICABLE SHALL BE USED.
12. THE BACKFILL BEHIND ABUTMENT, WING WALL AND RETURN WALL SHOULD BE AS PER CLAUSE 7.5 OF I.R.S BRIDGE SUB-STRUCTURE AND FOUNDATION CODE WITH UP TO DATE ALL CORRECTION SLIPS.
13. 600MM FILTER MEDIA SHALL BE PROVIDED WITH HAND PACKED BOULDERS ON THE EARTH FACE OF ABUTMENT/TREPANNING WALL VOIDS BETWEEN BOULDERS SHALL BE FIELD WITH SMALLER SIZED STONES TO PREVENT OUT FLOW OF BACK FILLED MATERIALS.
14. WEEP HOLES SHALL BE 75/100 DIA PVC PIPES STAGGERED 1000MM C/C HORIZONTALLY AND VERTICALLY ABOVE L.W.L OR F.S.L IN CASE OF CANAL BRIDGE IN BOTH WING/RETURN WALL AND EARTH RETAINER / ABUTMENT OF BRIDGE SHOULD BE AS PER CLAUSE 7.6 OF I.R.S BRIDGE SUB-STRUCTURE AND FOUNDATION CODE.
15. THE BANK SLOPES BEYOND THE BOULDERS PITCHING SHALL BE PROTECTED FROM RAIN CUTS BY PROVIDING TURFING.
16. ALL WORK SHALL BE CARRIED OUT AS PER THE INSTRUCTIONS & SUPERVISION OF ENGINEER -IN -CHARGE.
17. SHARP EDGES OF CONCRETE SHALL BE CHAMPHERED.
18. BRIDGES COMES UNDER SEISMIC ZONE IV AREA.
19. EXPOSURE CONDITION OF BRIDGES IS MODERATE.
20. PITCHING WORK SHALL BE DONE IN ACCORDANCE WITH ANNEXURE-1 AS PER W/CON/29/O/AW-1/PART-III DATED 11-11-2009.
21. SEPARATE DRAWING WILL BE ISSUED FOR RETURN TOE WALL.
22. DIMENSION SHOWN IN SUBSTRUCTURE ARE TENTATIVE IN NATURE.DETAILED DESIGN CALCULATION AND SOIL REPORT WILL BE SUBMITTED ALONG WITH STRUCTURAL DRAWINGS.
23. THE DEPTH OF PILES SHOWN IN DRAWING MAY VARIES AT THE TIME OF DESIGNING OF THE SUB STRUCTURE OF BRIDGES.
24. THE EXECUTION OF BRIDGES WILL START AFTER APPROVAL OF DESIGN FROM RAILWAYS.
25. DUCTILE DETAILING OF REINFORCEMENT CONCRETE SHALL BE AS PER IRS SEISMIC CODE -2020.
26. INITIAL PILE TEST REPORT MUST BE APPROVED BY CE/CON BEFORE EXECUTION OF WORKING PILE.
27. TRANSITION SYSTEM SHOULD BE PROVIDED AT BOTH END OF ABUTMENT AS PER RDSO DRG. NO. GE/SK/GL/912A/REV.0/2024.
28. MINIMUM 150 MM PROJECTION IN BEARING PEDESTAL IS REQUIRED.
29. PILE ARRANGEMENT AS PER DESIGN.
30. LIQUEFACTION ANALYSIS TO BE SUBMITTED WITH DESIGN.
31. SUB-STRUCTURE PROPOSED IS FOR SINGLE LINE TRACK ONLY.
32. FIELD UNIT MUST PRE VALIDATE ALL DATA AND LEVELS BEFORE EXECUTION OF WORK COMMENCES.
33. LATEST RAILWAY BOARD GUIDELINES REGARDING RSI ANALYSIS MUST BE FOLLOWED.
34. ALL REINFORCEMENT DETAILS WILL BE ISSUED SEPARATELY.
35. CRS MINOR SECTION IS REQUIRED TO BE TAKEN BEFORE EXECUTION OF WORK STARTS.
36. THE EXECUTION OF BRIDGE WORK AT SITE SHALL START AFTER APPROVAL OF DESIGN FROM RAILWAYS.
37. FOOTPATH SLAB AS PER RSDO DRG. NO. B-10294 MUST BE PROVIDED.
38. DIMENSIONS OF U-TYPE RETURN WALL TO BE PROVIDED AS PER SITE CONDITION.

REFERENCE :
1. FOR 12.20 PSC SLAB, FOR SUPERSTRUCTURE DETAILS REFER STANDARD DRAWING RDSO/B-10271.
2. SEISMIC ZONE IV RCC RETAINER TO BE CASTED ALONG WITH BED BLOCK AS PER RDSO DRAWING NO. B-10255/2

TRACK DETAILS

PROP R.L	111.182m
PROP F.L	110.420 m
VERTICAL ALIGNMENT	LEVEL
HORIZONTAL ALIGNMENT	STRAIGHT

CONSTRUCTION DEPTH

	PROP. LINE
1) RAIL	172 mm
2) RUBBER PAD	10 mm
3) PSC SLEEPER	230 mm
4) BALLAST	350 mm
TOTAL	762 mm

LEGEND

R.L	RAIL LEVEL
F.L	FORMATION LEVEL
T.O.P.C	TOP OF PILE CAP
B.O.P.C	BOTTOM OF PILE CAP
PROP.	PROPOSED
EXG.	EXISTING
THK.	THICKNESS
EXP. JT.	EXPANSION JOINT
C.C	CEMENT CONCRETE
GL	GROUND LEVEL
F.R.L	FINISHED ROAD LEVEL

FOR EPC TENDER ONLY

LOADING STANDARD
25T-AXLE LOAD-2008

		CE / CON / I/GKP	(SANJAY KANOJIA) 15/7/25
DY. CE / CON /BSB	PANKAJ PANDEY (Digitally signed by PANKAJ PANDEY Date: 2025.07.07 17:56:50 +05'30') (PANKAJ PANDEY)	DY. CE / CON. / P&D	(SHAILENDRA SINGH)
XEN / CON / GKP.	SHASHI KANT SINGH (Digitally signed by SHASHI KANT SINGH Date: 2025.07.07 17:32:48 +05'30') (S.K.SINGH)	XEN / C / DESIGN	(R.K.SINGH)

CONST. & HQ. OFFICER'S SIGNATURE

CLIENT : NORTH EASTERN RAILWAY

PROJECT : CHITAUNI-TAMKUHI ROAD NEW LINE PART-1

TITLE : GENERAL ARRANGEMENT DRAWING FOR PROPOSED BR. NO. 36 (2 x 12.20m PSC SLAB) (MAJOR)

BETWEEN STATION :-CHITAUNI-MADHUBANI | KM : 20/3-4 CH:- 20325.49M

TYPE OF MAP : GENERAL ARRANGEMENT DRAWING

FILE NO. AAA/2644/STR/BR.NO. 20/GAD/001

CONSULTANT: aarvee associates architects engineers & consultants pvt. ltd.

(G.K.MISHRA) SSE/W/CON/GKP	RANJEET KUMAR SINGH (Digitally signed by RANJEET KUMAR SINGH Date: 2025.07.07 17:10:12 +05'30') (R.K.SINGH) SSE/DRG./CON/CPR	JE/DES/CON/GKP	(BILAL AHMAD) SSE/DESI/CON/GKP

CE/CON./ Plan No. B/CTE-TOI/187 /07- 2025 | SCALE AS SHOWN
Date: 11 /07/2025 | SHEET : 1/1

Signature Not Verified
Digitally signed by PANKAJ PANDEY
Date: 2025.08.12 11:36:16 IST
Reason: IREPS-CRIS
Location: New Delhi