Date: 2026.06.22
11:52:20 IST
Reason: REPS
Document
Location: IREPS-CRIS

ALT. NO.	ALT. DATE	ZONE	ALTERATIONS	AUTHORITY
C	26/06/2022	ALL	1.LENGTH OF ITEM-2 REVISED. 2.DIMENSION OF ITEM-4 REVISED.	CHANGE REQUEST NO. 2300220726

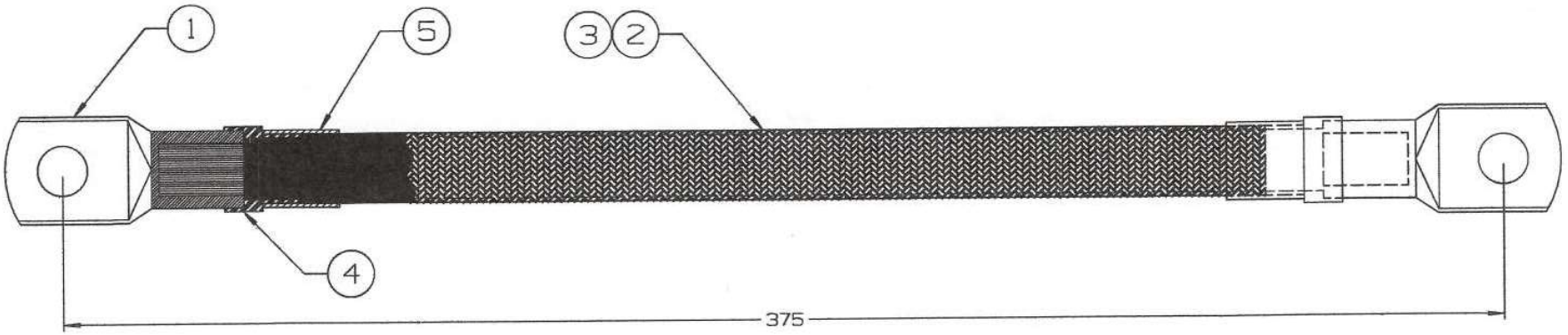

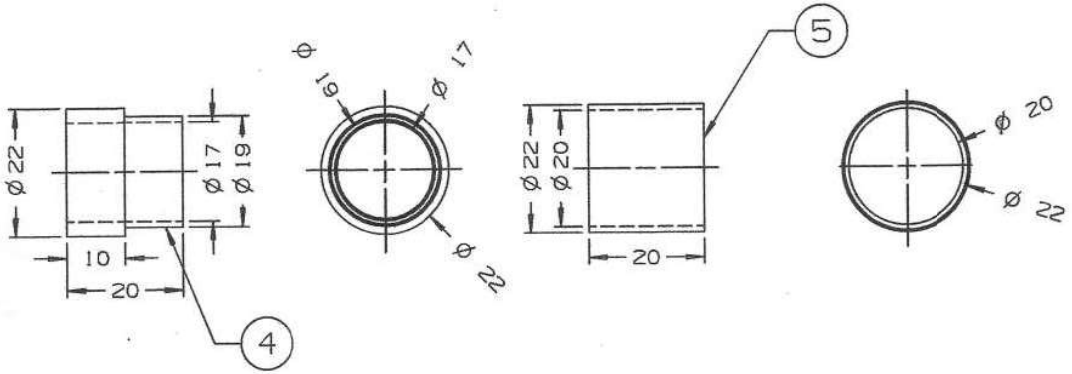

ITEM	DESCRIPTION & DIMENSIONS	QPASSLY	DETAIL DRG	MATL. & SPEC.	REMARKS
5	STAINLESS STEEL BUSH	2	NIL	AISI-304	NIL
4	INSULATING BUSH	2	NIL	TEFLON	NIL
3	STAINLESS STEEL BRAIDING	1	NIL	NIL	NIL
2	70 SQ.MM GREEN/YELLOW THIN FLEX. ELAST. CABLE WITH CU. COND. 750V TO 1.8/3.0KV	1	NIL	ELRS/SPEC/ELC/0019 (LATEST)	NIL
1	CRIMPING SOCKET	2	NIL	EDTS-200 (LATEST)	ITEM-7

GROUP: ELECTRICAL — SUPERSEDES: NIL

FILE: D:\Manish\Wheel set Earthing PRT\LW71248.prt

EARTHING CABLE COMPLETE
(FOR LHB TYPE COACHES)

RAIL COACH FACTORY, KAPURTHALA

रेल कोच फैक्टरी कपूरथला — IRS

SEE/D&D — DY.CEE/D&D

WELD LENGTH	NIL M
WEIGHT	NIL KG
S.AREA	NIL M²
~~LENGTH / DIA~~	NIL M
~~WIDTH / THICK~~	NIL M
HEIGHT	NIL M

SCALE — SSE/ED — CHD — DRN

REF.DRG.NO. NIL

PL NO. NIL

DRG.NO. LW71248

ALT. C — SIZE A3 — SHEET 1/1

NOTE:- 1. ALL DIMENSIONS IN MM.

DETAIL DRGS STARTING WITH "LI" ARE INTERNAL REFERENCE LISTS ONLY AND ARE NOT FOR ISSUE.

THIS IS A COMPUTER GENERATED DRAWING. ANY MANUAL ALTERATION SHALL AUTOMATICALLY RENDER IT INVALID.

FOR UNTOLERANCED DIMENSIONS REFER MDG0008 — DATE OF FIRST ISSUE 02/09/2005

THIS DRAWING IS THE INTELLECTUAL PROPERTY OF RAIL COACH FACTORY, KAPURTHALA. THIS DRAWING SHOULD NOT BE REPRODUCED, ALTERED, USED FOR MANUFACTURING OF COMPONENTS, SOLD OR TRANSFERRED WITHOUT PERMISSION FROM CHIEF DESIGN ENGINEER, RAIL COACH FACTORY, KAPURTHALA.

18.08.2009

7