Signature Not Verified
Digitally signed by SAWAN SHARMA
Date: 2026.06.12 17:09:10 IST
Reason: IREPS Document
Location: IREPS-CRIS

2024/Track-I/8(1)/HPRC
2023/O/o ED/TRACK-1/RDSO

specified under **Table-2**.

vi) Details of monitoring shall be recorded in **Annexure-2A**. Separate Annexures to be filled for HPRC of different types/drawings. The torque shall be measured with dial type torque wrench and filled in the desired column of **Annexure-2A**.

vii) The special attention given to track i.e. deep screening, destressing etc. during the field trial period should be specifically recorded in the **Annexure-2A** with the detailed reason & date.

viii) During entire field trial, if any HPRC is changed due any crack/Breakage/ Corrosion in Fishplate and or HPRC or any other reason, the same must be recorded in the **Annexure-2A.**

ix) In case, frequent/ abnormal loosening of clamp torque is observed or any adverse performance/ unsafe condition is observed, the trial shall be discontinued and appropriate action shall be taken to ensure safe passage of traffic under intimation to RDSO.

Table-2

S.N.	Speed Restriction	Test sites location	Total trial period	Action to be taken
1.	50 kmph*	Main line track	3 days	Torque of bolts in N-m will be monitored after passing of every train. (Torque shall be measured with Dial type Torque wrench)
2.	75 kmph*		20 days	
3.	100 kmph*		50 days	

* Trials shall preferably be continued in the same track locations and trials shall be continued further if performance found satisfactory in previous speed potential.

****

AKHILESH KUMAR
Digitally signed by AKHILESH KUMAR
Date: 2023.12.22 16:09:55 +05'30'

Signature Not Verified
Digitally signed by AMI CHAND
Date: 2026.06.12 17:06:03 IST
Reason: IREPS-CRIS
Location: New Delhi

2454628/2023/O/o ED/TRACK-1/RDSO

Annexure-2A

Proforma for Monitoring the Performance of 'High Performance Rail Clamp'(HPRC)

(Trial Proposed on SCR, ECR & SECR)

Firm's name: …….. Make of the Clamp: Codiun Clamp

1.0 General information:

(a) Railway/ Division…….

(b) Section (Name of line or branch)…….....

(c) Traffic density (GMT)……(d)Sectional speed……

(e) Rail Section……..... (f)Sleeper Density……,

(g) Ballast cushion…….mm (h) Condition of ballast compaction……

(i) Between stations.....to.....….....

(j) Kilometerage……to……..

(k) Straight/Curve (Degree of curvature)…….....

(l) Fishplate drawing no.....

(m) High Performance Rail clamp version (as specified by OEM).....……...

(n) Monitoring period from date.....to.....

(o) Total GMT passed during monitoring period……..GMT

2.0 GENERAL REMARKS (observed during trials):

a) **Regarding shifting & crack/breakage of:-**

Fishplates:……

b) **Regarding corrosion of:-**

1) Rails:……
2) Fishplates:……

c) **Other Remarks (If any):**
……
……
……
……

Signature Not Verified
Digitally signed by AMI CHAND
Date: 2026.06.12 17:06:03 IST
Reason: IREPS-CRIS
Location: New Delhi

AKHILESH KUMAR
Digitally signed by AKHILESH KUMAR
Date: 2023.12.22 16:10:17 +05'30'

Signature with seal (Zonal Railway's official)

(Page 1 of 2)

Annexure-2A (Contd..)

3.0 Details of Monitoring for HPRC field trial for Codiun clamp (Trial proposed on SCR, ECR & SECR)

SN	Date	Time	Speed during trial (kmph)	Initial Tightening Torque (N-m) (as specified by OEM) 400N-m		Rail temperature (°C)	Gap between rails (mm)	After passing of train, Measured torque (N-m)		After passing of train- Tightening required (Y/N) (**After Passing of train, clamp shall be re-tightened upto the torque as specified by OEM**)		Remarks/ General Observations
				Clamp-1	Clamp-2*			Clamp-1	Clamp-2*	Clamp-1	Clamp-2*	

Note:

i. **Separate Annexure shall be used for different Fishplate Drawings for separate locations.**

ii. *** Two clamps of Codiun clamp MK8 will be used on joint that will be called as Clamp-1 & Clamp-2.**

iii. ***For Joggled fishplate to drg No. RDSO/T-5848 two clamps of Codiun clamps MK2-T5848 will be used on joint, that will be called as Clamp-1 & Clamp-2.**

Signature with seal (Zonal Railway's official)

Signature Not Verified
Digitally signed by AMI CHAND
Date: 2026.06.12 17:06:03 IST
Reason: IREPS-CRIS
Location: New Delhi
AKHILESH KUMAR
Digitally signed by AKHILESH KUMAR
Date: 2023.12.22 16:10:37 +05'30'

(Page 2 of 2)

Appendix-B

PHYSICAL FEATURES OF HPRC CLAMPS

SN	HPRC CLAMP	MATERIAL	WEIGHT OF HPRC CLAMP (PER SET)	LENGTH ALONG THE RAIL	Torque to be applied Nm
1	Robel 68.05 Ver. 13	EN-GJS-500-10	12.5 kg	100 mm	580
2	Robel 68.05 Ver. 06		21.5 kg	190 mm	
3	Codiun MK 8	S355 Steel plate	10.2 kg	60 mm	400
4	Codiun MK 2 T-5848		10.2 kg	60 mm	

TORQUE WRENCH

- Must be equipped with setting scale
- Suitable for torque respective torque value i.e 580 Nm & 400 Nm
- Approx weight 3 to 4 kgs
- Approx. length 900 to 1000 mm
- Suitable socket

-

Signature Not Verified
Digitally signed by AMI CHAND
Date: 2026.06.12 17:06:03 IST
Reason: IREPS-CRIS
Location: New Delhi

Draft No. DFA/89519

Ver 13.pdf

Appendix-C

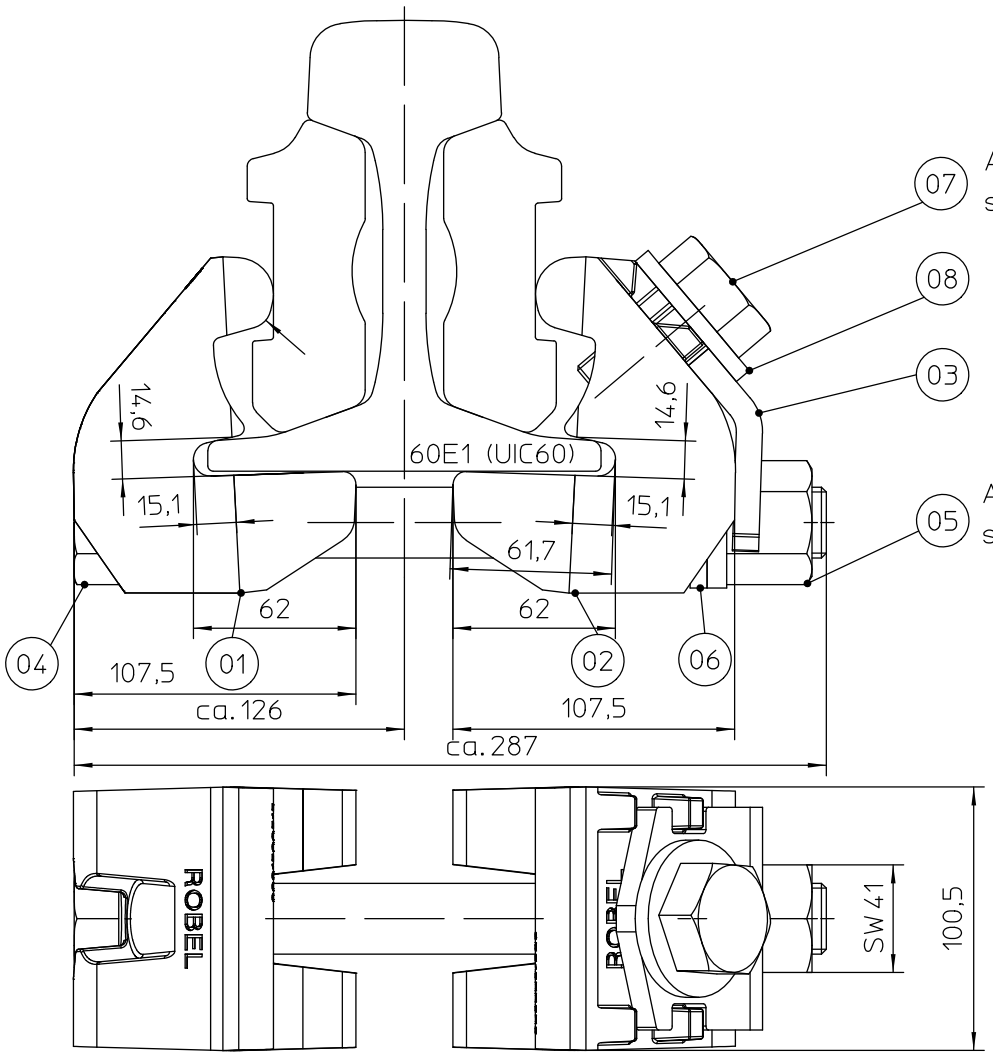

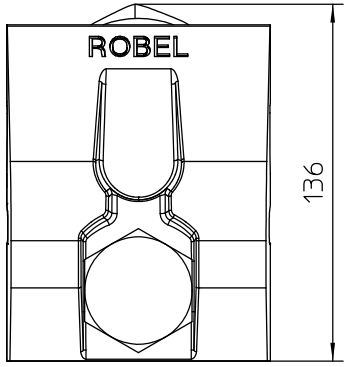

Passend für folgende Schienen/Laschen Kombinationen:
Applicable for the following Rail/Fishplate combination:

- Schiene UIC60 (60E1) (Blad 7701b)
  Rail UIC60 (60E1) (Blad 7701b)
  Flachlasche nach Zeichnung Blad 7702
  Fishplate Drawing Number Blad 7702

- Schiene DSB45 (Blad 5501a)
  Rail DSB45 (Blad 5501a)
  Flachlasche FL 41/49 angepasst min. 80mm
  Fishplate FL 41/49 modified min. 80mm

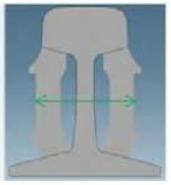

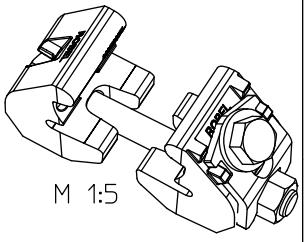

Rail Clamp

Positionen 01 und 02 Backen lackieren mit Leuchtorange (RAL 2005)
Position 03 Sicherungsplatte Himmelblau (RAL 5015)

Pos	Menge	EDV-Nr:	v.	Benennung	Zng.-Nr.(alt)
08	1	9906796027		Spannscheibe DIN6796- 27 -FSt	EDV/SML-Nr.: 9906796027
07	1	9909612750		Schr. M27x2x50 - 10.9 EN28676	EDV/SML-Nr.: 9909612750
06	1	9909990027		Sicherungsscheibe HS 27 - FSt	siehe_SML 9909990027
05	1	9906331270		SK.Mutter mit Bund M27 DIN6331	EDV/SML-Nr: 9906331270
04	1	9909312727		6kt-Schr. M27x270 10.9 EN24014	EDV/SML-Nr.: 9909312727
03	1	8681500521		Sicherungsplatte f. Af.11+13	
02	1	8681500505		Backe mit Sicherung / Kurz	
01	1	8681500515		Backe / Kurz	

Bst.	Art der Änderung (Begründung)	Datum	Name	Freigeg.:
				Fegg
ab	Stücklisten-Layout geändert	28.08.2018	Muehlb_F	Fegg
aa	Bemaßungen hinzu	02.07.2014	Tiefenb	Fegg

Status: Freigegeben

(getrennte) Stückliste:

Allgemeintoleranzen:
Brennschneidschablonen: ISO9013: ▱ A
Schweißgruppen: EN 13920: A E
Sonstiges: DIN ISO 2768 mittel
Maßeinheit:

Maßstab: 1:2

Oberfl.:

Gewicht: 11.5 kg/ME

Werkstoff u. Maßnorm / EDV-Nr.:

Vers.:

Diese Zeichnung und ev. Anlagen sind unser Eigentum und dürfen ohne unsere schriftliche Genehmigung weder vervielfältigt noch dritten Personen zugänglich gemacht werden.

	Datum	Name
Bearb.	08.05.2014	Tiefenb
Geprüft	28.08.2018	Fegg
Normprfg.		
Schweißtechn. Prfg.		

Darstellung nach DIN 6 - Proj. 1

CAD-Sys.: CoCreate OSD Modelling/Annotation

Benennung:
Notlaschenverbinder 68.05/A.13

EDV-Nr.: 8689900013 Vers.: 1

Bl. 1 mehrere Bl.: -

ROBEL Bahnbaumaschinen GmbH
Industriestr. 31
D83395 Freilassing

Fertigungsartikel

Hersteller u. -Nr.:

Urspr.: 8689900005 Alternativteil: 9806805013 Ers. f.: Ers. d.:

C-1

Allgemeintoleranzen soweit nicht extra vermerkt nach EN ISO 13920 : A E

Bereich	2-30	30-120	120-400	400-1000	1000-2000	2000-4000	4000-8000	8000-12000	12000-16000	16000-20000	20000-25000
Längenmaße	±0,5	±1	±1,5	±2	±3	±4	±5	±6	±7	±8	±9
Winkelbereich/kurzer Schenkel	0,5	1	1,5	2	3	4	5	6	7		
Winkelbereich/langer Seite				bis 400: ±20'			400-1000: ±15'				ÜV 1000: ±10'

Allgemeintoleranzen soweit nicht extra vermerkt nach DIN ISO 2768 bzw. DIN 7168, mittel

Bereich	6-30	30-120	120-400	400-1000	1000-2000	2000-4000	Über 4000
Längenmaße	±0,1	±0,2	±0,3	±0,5	±1,2	±2	±3
Winkelbereich/kurzer Schenkel	±0,5	±1	±1,5	±2	±3	±4	±5
Winkelbereich/langer Schenkel			±0,5° bis 10'	±0°30'	±0°20'	±0°10'	±0°5'

Allgemeintoleranzen soweit nicht angegeben entspr. DIN ISO 2768 - Toleranzklasse K

Signature Not Verified
Digitally signed by
Date: 2026.06.12
Reason: IREPS-CRIS
Location: New Delhi

Signature Not Verified
Digitally signed by AMITSHAND
Date: 2026.03.12 17:09:03 IST
Reason: IRTPS-CRIS
Location: New Delhi

Track-I

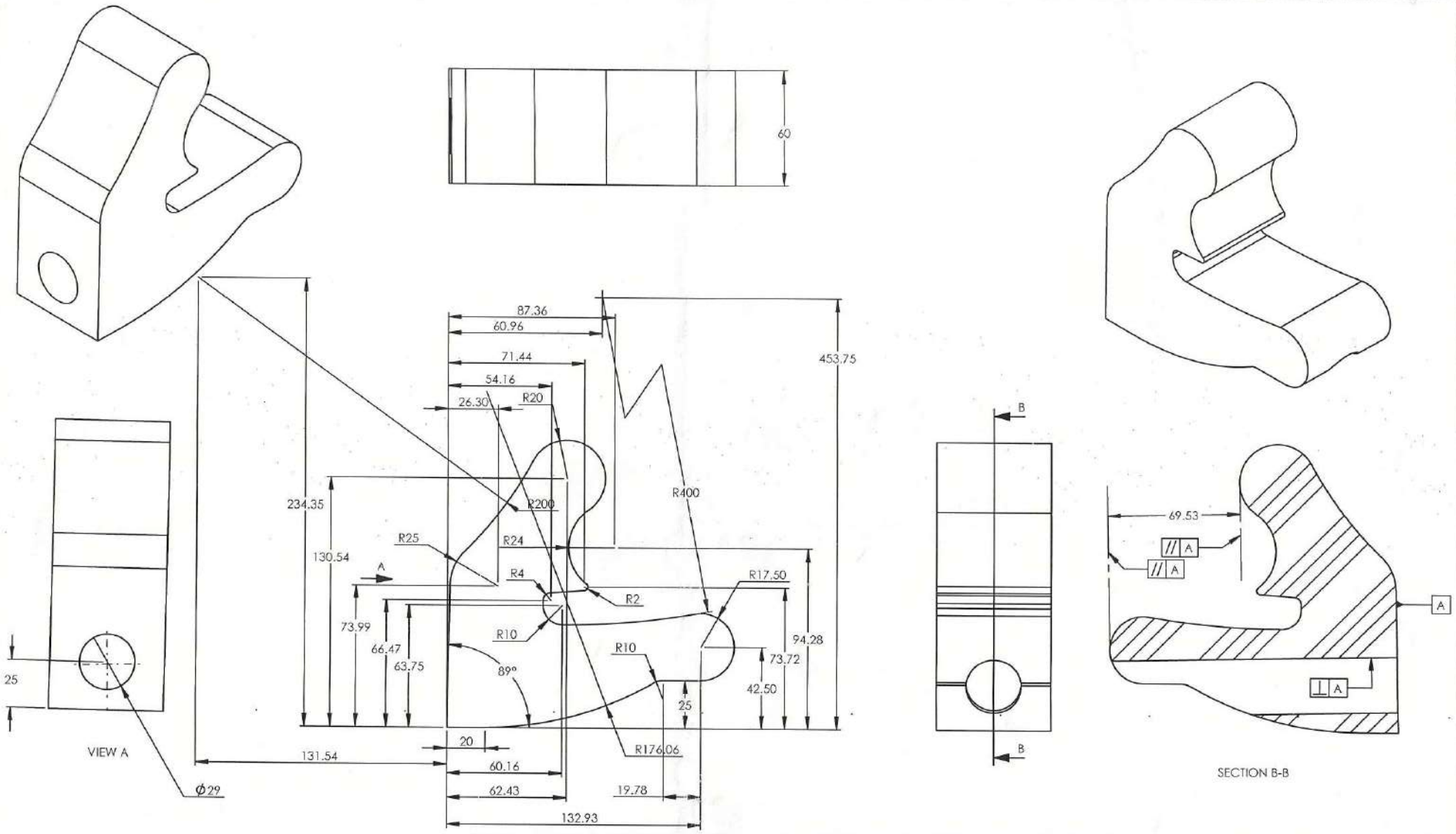

	Rail Clamp	UNLESS OTHERWISE SPECIFIED: DIMENSIONS ARE IN MILLIMETERS SURFACE FINISH: TOLERANCES: SEE NOTES	FINISH: Painted Yellow SOURCE: Flame-cut profile	DEBUR AND BREAK SHARP EDGES	DO NOT SCALE DRAWING / REVISION 10
Stock Size	60mm				TITLE: Mk8 clamp part 1
Stock Length		DRAWN	NAME	ORGANISATION / DATE	
Vendor		CHKD			
Vendor No.		APPV'D			
Cost		MFG			
Configuration	Default	G.A			DWG NO. 28091404 / A3
Client	Codiun Rail Ltd	Third angle Projection		MATERIAL: BS EN 10210-2:S355 WEIGHT: 4607.83	SCALE:1:2 / SHEET 1 OF 3

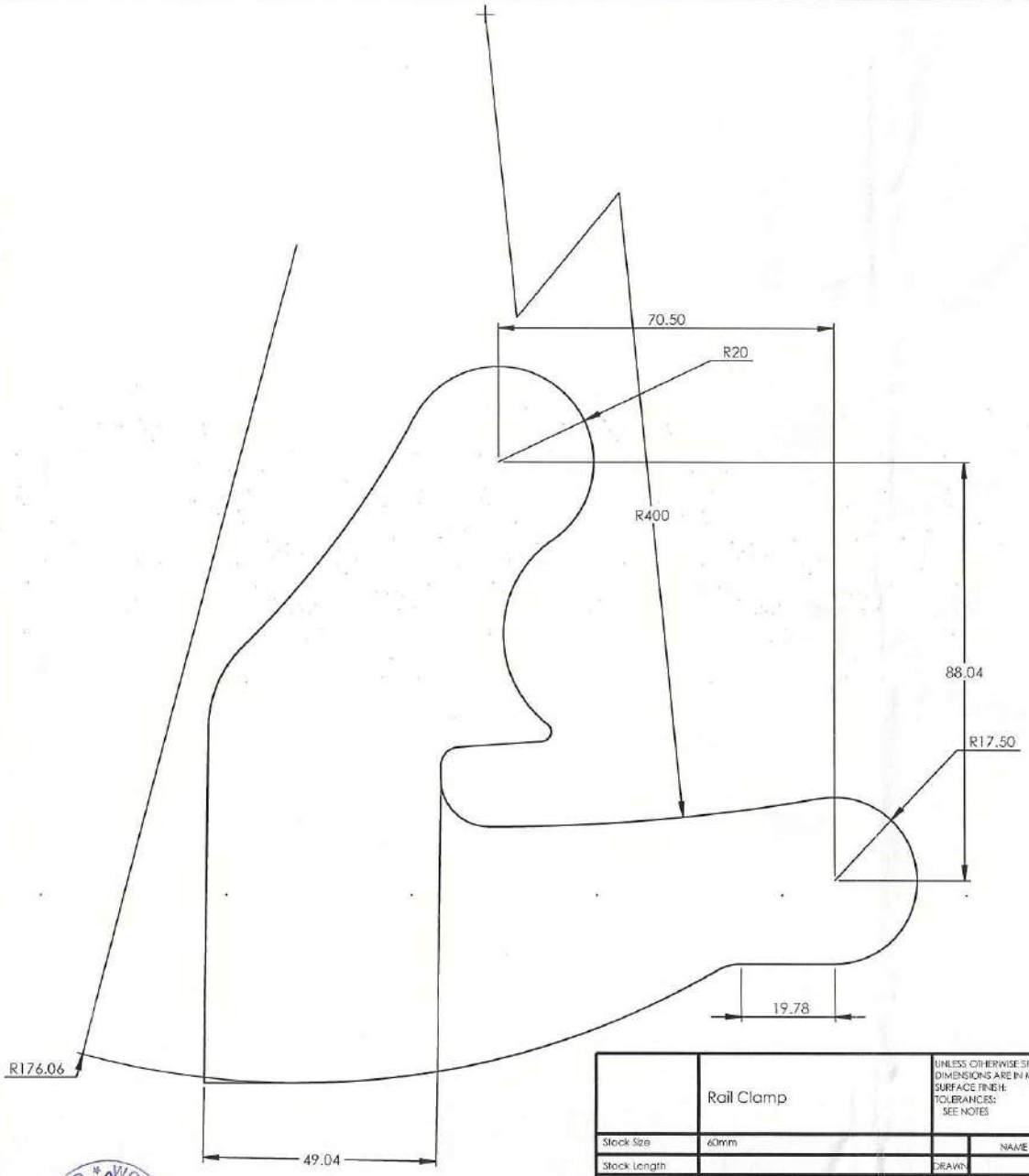

	Rail Clamp	UNLESS OTHERWISE SPECIFIED: DIMENSIONS ARE IN MILLIMETERS SURFACE FINISH: TOLERANCES: SEE NOTES	FINISH: Painted Yellow	DEBUR AND BREAK SHARP EDGES	DO NOT SCALE DRAWING	REVISION 10
			SOURCE: Flame-cut profile		T	
Stock Size	60mm	NAME	ORGANISATION	DATE	TITLE: Mk8 clamp part 1	
Stock Length		DRAWN				
Vendor		CHKD				
Vendor No.		APPVD				
Cost		MFG				
Configuration	Default	Q.A				
Client	Codiun Rail Ltd	Third angle Projection		MATERIAL: BS EN 10210-2:S355	DWG NO. 28091404	A4
				WEIGHT: 4607.83	SCALE:1:1	SHEET 2 OF 3

WONTECH ENGINEERING PVT. LTD.

Signature Not Verified
Digitally signed by AMI CHAND
Date: 2026.06.12 17:06:03 IST
Reason: TRIPS-CRIS
Location: New Delhi

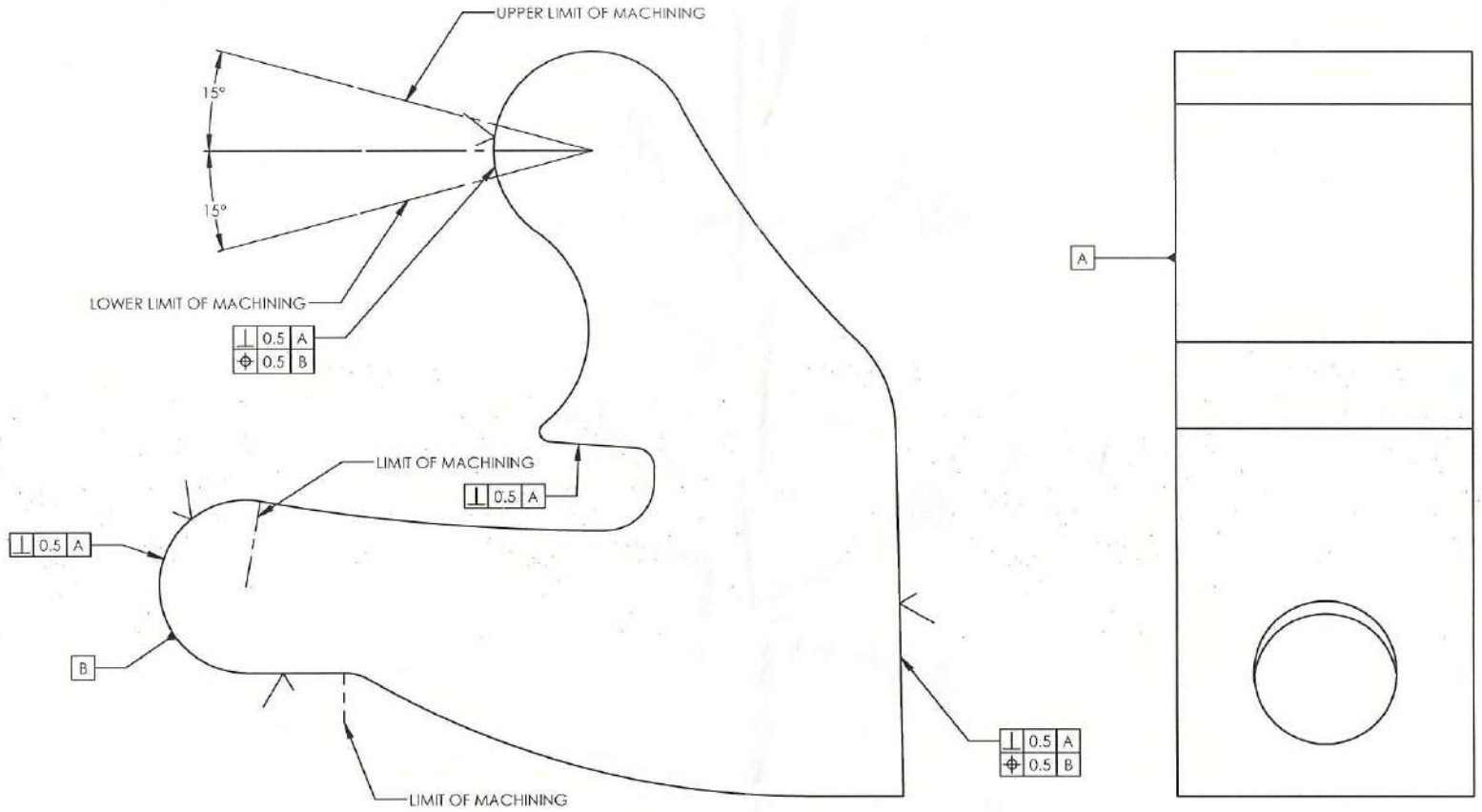

NOTE

FLAME CUT TOLERANCES ARE ACCEPTABLE EXCEPT IN THE SMALL AREAS INDICATED WHERE MACHINING MAY BE REQUIRED TO ACHIEVE ACCEPTABLE ALIGNMENT WITH MATING COMPONENTS.

IN ALL OTHER AREAS PROFILE LINE SHOULD BE CONSIDERED A MINIMUM MATERIAL REQUIREMENT.

MONTECH ENGINEERING PVT. LTD.

	PROJECT Rail Clamp	UNLESS OTHERWISE SPECIFIED: DIMENSIONS ARE IN MILLIMETERS SURFACE FINISH: TOLERANCES: SEE NOTES	FINISH: Painted Yellow COLOUR: SOURCE: Flame-cut profile	DEBUR AND BREAK SHARP EDGES	DO NOT SCALE DRAWING	REVISION 10	
Stock Size	60mm		NAME / ORGANISATION / DATE		TITLE: Mk8 clamp part 1		
Stock Length		DRAWN					
Vendor		CHK'D					
Vendor No.		APPV'D					
Where Used		MFG					
Configuration	Default	Q.A.		MATERIAL: BS EN 10210-2:S355	DWG NO. 28091404		A3
QTY REQ'D			Third angle Projection				
Client	Codiun Rail Ltd			WEIGHT: 4607.83	SCALE: 1:1	SHEET 3 OF 3	

Signature Not Verified
Digitally signed by AMI CHAND
Date: 2026.06.12 17:06:03 IST
Reason: TRIPS-CRIS
Location: New Delhi

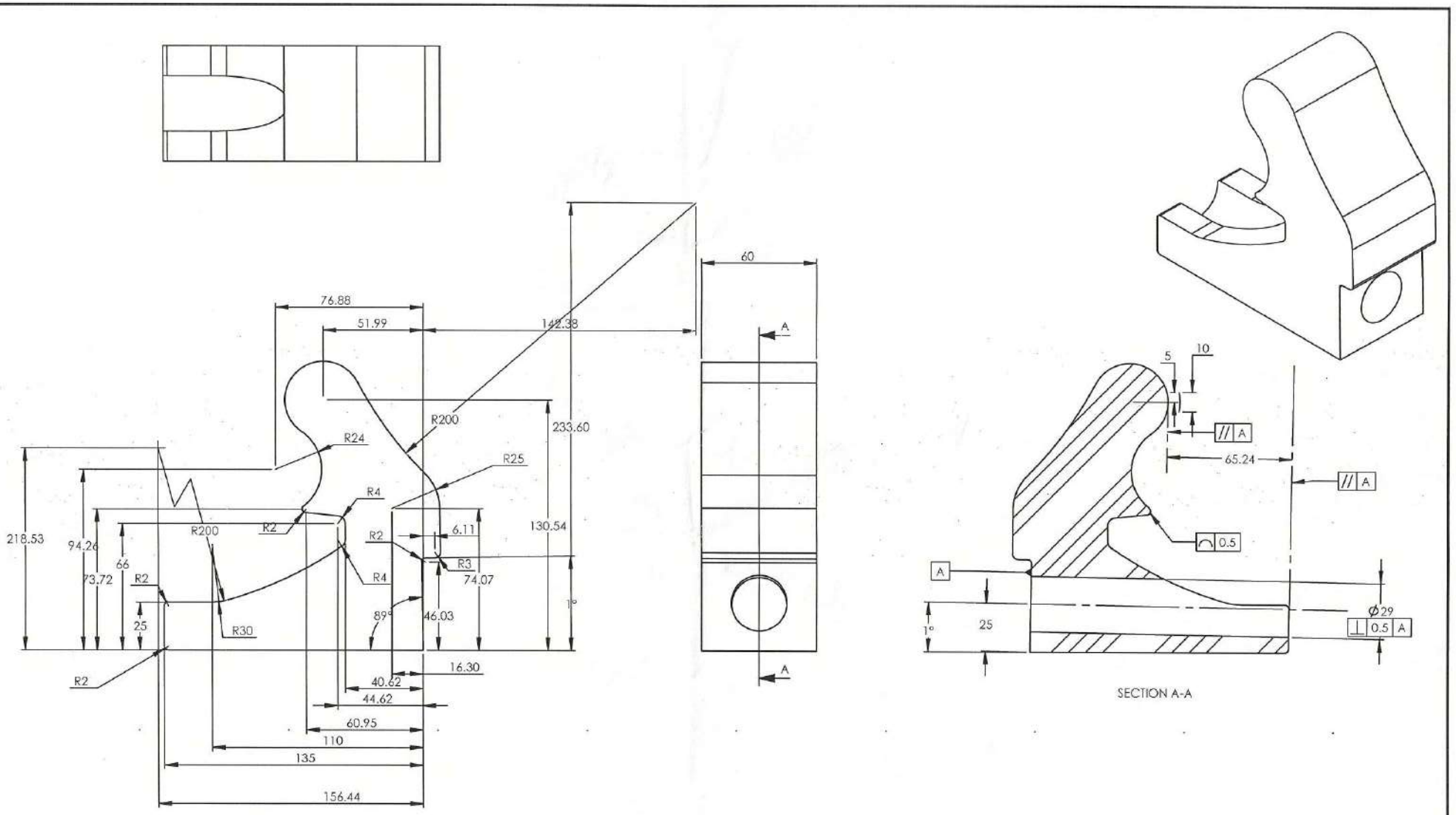

	Rail Clamp	UNLESS OTHERWISE SPECIFIED: DIMENSIONS ARE IN MILLIMETERS SURFACE FINISH: TOLERANCES: SEE NOTES	FINISH: Painted Yellow SOURCE: Flame-cut profile	DEBUR AND BREAK SHARP EDGES	DO NOT SCALE DRAWING / REVISION 10
Stock Size	60mm		NAME / ORGANISATION / DATE		TITLE: Mk8 clamp part 2
Stock Length		DRAWN			
Vendor		CHK'D			
Vendor No.		APPV'D			
Cost		MFG			
Configuration	Default	Q.A		MATERIAL: BS EN 10210-2:S355	DWG NO. 30091421 / A3
Client	Codiun Rail		Third angle Projection	WEIGHT: 4105.31	SCALE:1:2 / SHEET 1 OF 3

WONTECH ENGINEERING PVT. LTD.

Signature Not Verified
Digitally signed by AMRCHAND
Date: 2026.06.12 17:06:03 IST
Reason: TRIPS-CRIS
Location: New Delhi

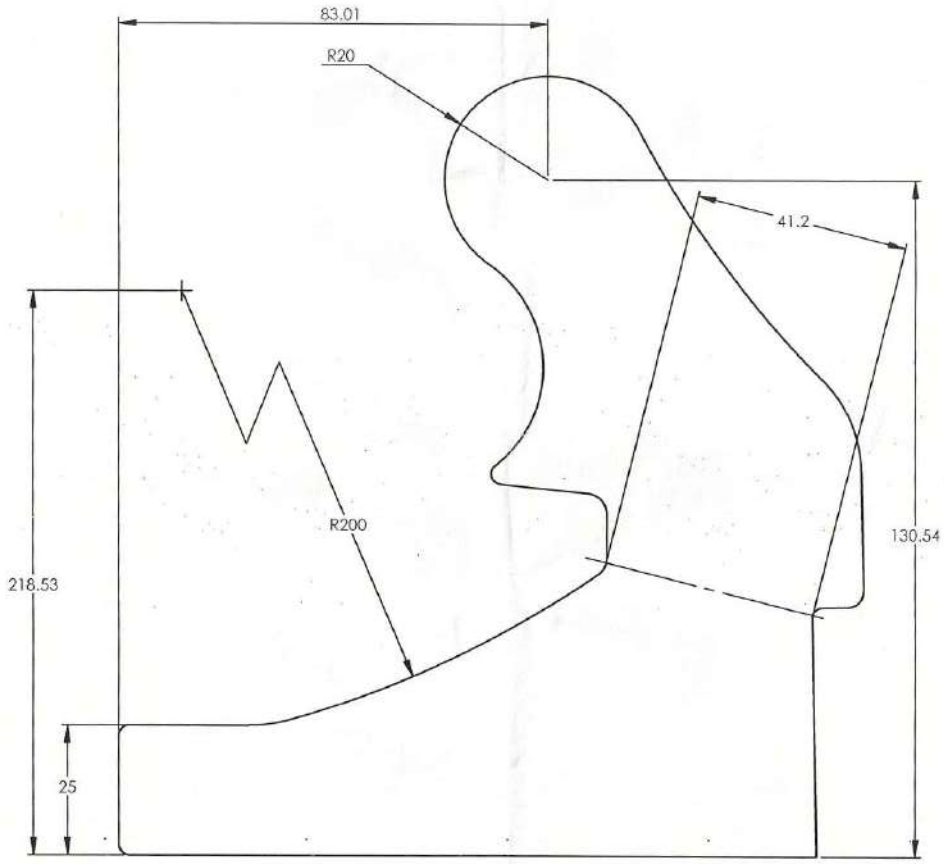

	Rail Clamp	UNLESS OTHERWISE SPECIFIED: DIMENSIONS ARE IN MILLIMETERS SURFACE FINISH: TOLERANCES: SEE NOTES	FINISH: Painted Yellow			DEBUR AND BREAK SHARP EDGES	DO NOT SCALE DRAWING	REVISION 10	
			SOURCE: Flame-cut profile				T		
Stock Size	60mm		NAME	ORGANISATION	DATE		TITLE: Mk8 clamp part 2		
Stock Length		DRAWN							
Vendor		CHK'D							
Vendor No.		APPV'D							
Cost		MFG							
Configuration	Default	Q.A				MATERIAL: BS EN 10210-2:S355	DWG NO. 30091421		A3
Client	Codiun Rail		Third angle Projection			WEIGHT: 4105.31	SCALE:1:1	SHEET 2 OF 3	

WONTECH ENGINEERING PVT. LTD.

Signature Not Verified
Digitally signed by AMIT CHAND
Date: 2026.06.12 17:06:03 IST
Reason: IRPS-CRIS
Location: New Delhi