82716011

▽ ROUGH MACHINED	(01) ROUGH CLEANED
▽▽ FINISH MACHINED	(01b) BURRS REMOVED
▽▽▽ FINE FINISH MACHINED	(18) CHAMFERED

REVISIONS

ALT.	ZONE	DESCRIPTION	APPROVED & DATE
a		ITEM-1 REVISED VIEWS UPDATED.	
b		ITEM-14 REVISED AND ITEM-27 ADDED. SECTION-MM ADDED. WELDING UPDATED IN SECTION-FF.VIEWS UPDATED.	

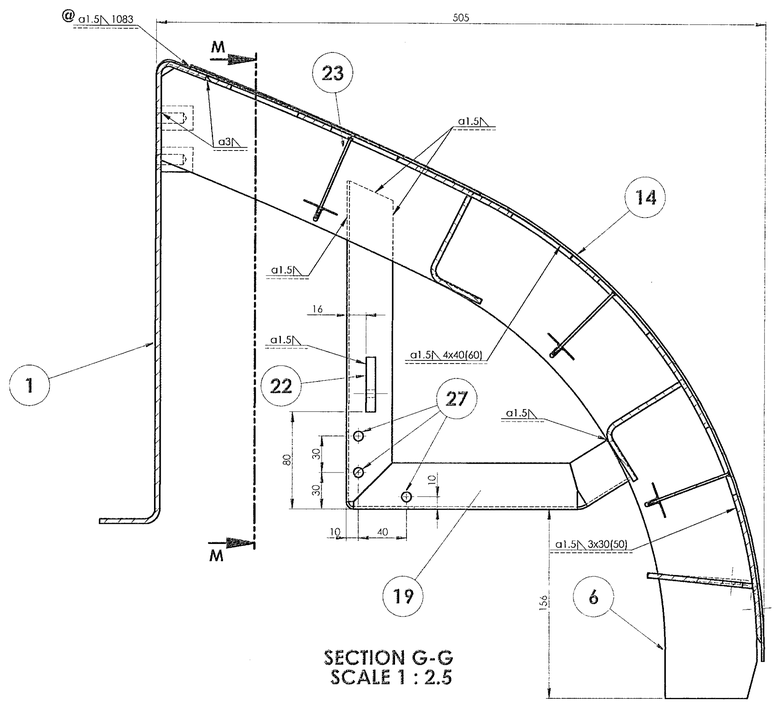

SECTION G-G
SCALE 1 : 2.5

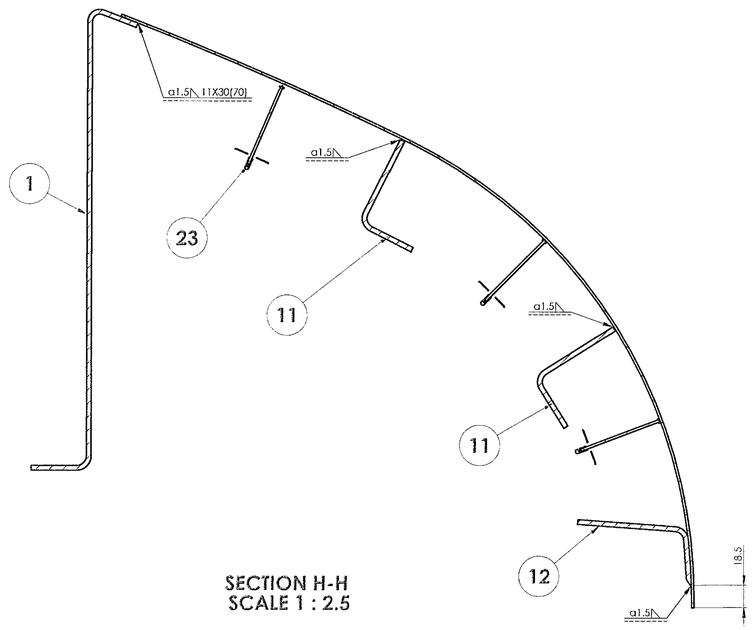

SECTION H-H
SCALE 1 : 2.5

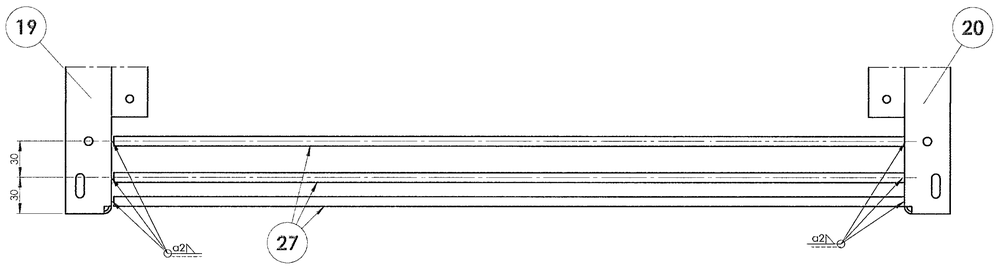

SECTION M-M
SCALE 1 : 2.5

NOTE:-

1. STAINLESS STEEL ELECTRODE OF SAME COMPOSITION AS PER TABLE-3 OF RDSO/SPEC. CK-201 SHALL BE USED FOR WELDING.
2. ALL WELDED JOINTS SPATTERS SHALL BE GROUND.
3. ALL WELDED JOINTS SHALL BE PICKLED AND PASSIVATED BEFORE SURFACE TREATMENT.
4. ALL SHARP CORNERS SHALL BE ROUNDED OFF.
5. ALL WELDING SHALL BE OF TIG UNLESS OTHERWISE SPECIFIED.
6. ALL WELD PERFORMANCE CLASS SHALL BE CP C2 UNLESS OTHERWISE SPECIFIED.
7. FOR WELD TESTING PREFERANCES REFER DRG. No. ICF/STD-9-0-998.
8. FOR WELD PROCEDURE SPECFICATION REFER DRG. No. ICF/STD-9-0-999
9. SCHEDULE OF REQUIREMENTS OF MANUFACTURE OF SIDEWALL/ ROOF ASSEMBLY SHALL COMPLY TO ICF/M/D/SPC-200 LATEST REVISION.
10. ITEM-24 (NAME PLATE) SHALL BE WELDED OR RIVETTED AT SUITABLE LOCATION AS SHOWN IN THE DRAWING IF PROCURED FROM TRADE.
11. ALL THE THREDED HOLES SHALL BE PROVIDED WITH SUITABLE DUMMY BOLTS TO SAFEGUARD THE THREADS.
12. @ LEAK PROOF WELDING SHALL BE ENSURED.
13. FINAL ROOF ELEMENT COMPLETE SHALL BE MANUFACTURED USING PROPER FIXTURE.
14. MASKING SHOULD BE DONE AT ALL EARTHING LUG/BOSS/GROUNDING FLAPS WITH SUITABLE MASKING TAPE'S BEFORE PAINTING TO ENSURE PAINTLESS EARTHING SURFACE AND THE MASKING TAPE'S SHALL BE REMOVED AT FURNISHING STAGE DURING EARTHING CONNECTION OF ELECTRIC EQUIPMENTS.

QTY.	DESCRIPTION	DIMENSIONS	ITEM NO.	REF.DRGS.	MATL	WT/UNIT IN KGS	REMARKS
3	TIE ROD	Ø8 x 657	27		SS-304	0.26	
3	FLAT		26	AAB16550		0.33	
1	SUCTION PIPE COMPLETE		25	59316056		5.239	
1	NAME PLATE FOR SUPPLIER IDENTIFICATION		24	AAA51072		0.063	
30	WELDING PIN ASSEMBLY		23	49516008		0.005	
2	GROUNDING FLAP		22	AAA16900		0.084	
1	BRACKET		21	AAA10962		0.615	
1	BRACKET		20	AAB10006		0.547	
1	BRACKET		19	AAB10005		0.547	
1	AUX. WATER TANK FIXING BRACKET		18	82716017		2.003	
1	AUX. WATER TANK FIXING BRACKET		17	82716016		1.948	
1	STIFFENING ANGLE		16	AAA16920		1.838	
1	ROOF SHEET		15	AAA16918		15.180	
1	ROOF SHEET		14	AAA16917		8.879	
1	LOCATION FRAME COMPLETE		13	59316019		7.283	
1	STIFFENING ANGLE		12	AAA16927		0.573	
2	STIFFENING ANGLE		11	AAA16926		0.544	
2	STIFFENING ANGLE		10	AAA16924		0.644	
1	STIFFENING ANGLE		9	AAA16923		0.631	
1	STIFFENING ANGLE		8	AAA16922		4.841	
1	STIFFENING ANGLE		7	AAA16921		5.224	
1	ROOF ARCH COMPLETE		6	59316018		6.260	
1	ROOF ARCH COMPLETE		5	59316017		2.835	
1	ROOF ARCH COMPLETE		4	82716015		6.945	
1	ROOF ARCH COMPLETE		3	82716019		1.73	
1	ROOF ARCH COMPLETE		2	82716020		1.69	
1	MEMBER COMPLETE		1	82716013		34.324	

GROUP: 1-6 Roof Construction | SURFACE AREA IN Sq.m.: 9.517 | WT/ASSY IN Kgs:

FINAL ROOF ELEMENT COMPLETE

SCALE 1:5 | SSC/D | CHD | ALT. b | ALTD E.SATHISH KUMAR | DRN E.SATHISH KUMAR

INDIAN RAILWAY STANDARDS
INTEGRAL COACH FACTORY, CHENNAI - 600038

SHEET 3 OF 3

LWFAC/PP2

82716011 A1

REF.DRG.NO.

DATE OF LATEST ALT	DATE OF FIRST ISSUE	AME/SME
12-2-26		

ALL DIMENSIONS ARE IN mm UNLESS OTHERWISE SPECIFIED. FOR UNTOLERANCED DIMENSIONS AND ROUGHNESS VALUES, REFER DRAWING NO ICF/STD-9-0-001.
ANY MANUAL ALTERATION SHALL AUTOMATICALLY RENDER THIS DRAWING INVALID. WELDING SYMBOLS ARE AS PER IS:813-1986. WEIGHT GIVEN IN DRAWING IS FOR INDICATIVE PURPOSE ONLY.

Signature Not Verified
Digitally signed by MANOJ KUMAR
Date: 2026.02.25 16:55:37 IST
Reason: IREPS
Document
Location: IREPS-CRIS

82716013

▽ ROUGH MACHINED	(01) ROUGH CLEANED
▽▽ FINISH MACHINED	(11b) BURRS REMOVED
▽▽▽ FINE FINISH MACHINED	(18) CHAMFERED

REVISIONS

ALT.	ZONE	DESCRIPTION	APPROVED & DATE
a		ITEM-1 REVISED VIEWS UPDATED.	

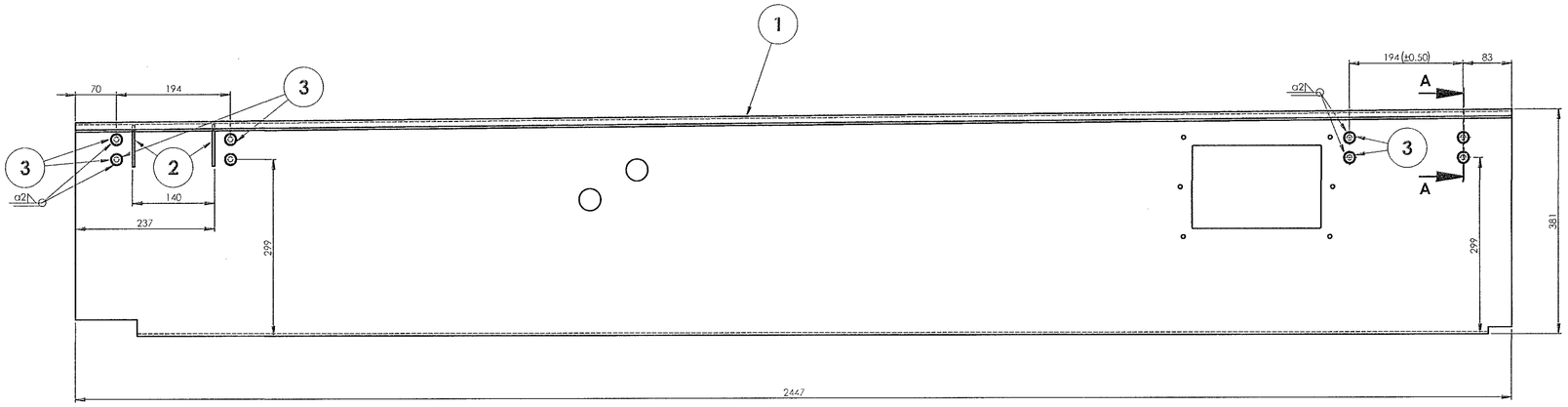

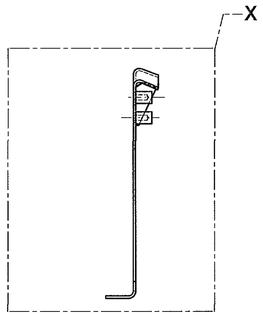

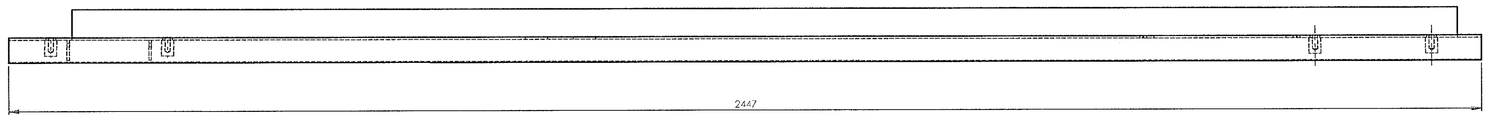

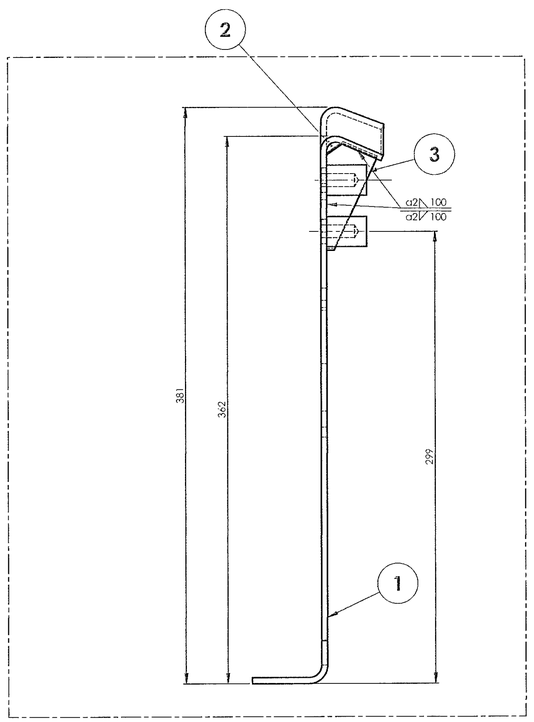

DETAIL X
SCALE 1 : 2

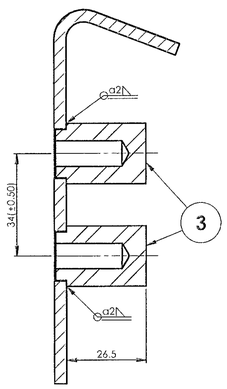

SECTION A-A
SCALE 1 : 1

NOTE:

1. STAINLESS STEEL ELECTRODE OF SAME COMPOSITION AS PER TABLE-3 OF RDSO/SPEC C-K201 SHALL BE USED FOR WELDING.
2. ALL WELD SPATTERS SHALL BE GROUND.
3. ALL WELDED JOINTS SHALL BE PICKLED AND PASSIVATED BEFORE SURFACE TREATMENT.
4. ALL SHARP CORNERS SHALL BE ROUNDED OFF.
5. ALL WELDINGS SHALL BE TIG WELDING UNLESS OTHERWISE SPECIFIED.
6. FOR WELD TESTING PREFERANCES REFER DRG. No. ICF/STD-9-0-998.
7. FOR WELD PROCEDURE SPECIFICATION REFER DRG. No. ICF/STD-9-0-999.
8. ITEM - 3 SHOULD BE WELDED WITH ITEM - 1 USING SUITABLE FIXTURE

QTY.	DESCRIPTION	DIMENSIONS	ITEM NO.	REF.DRGS.	MATL	WT/UNIT IN KGS	REMARKS
8	SCREWING PIECE		3	AAD16884		0.06	
2	RIB		2	AAA16929		0.043	
1	MEMBER		1	AAF16122		33.743	

GROUP: 1-6 Roof Construction | SURFACE AREA IN Sq.m.: 2.170 | WT/ASSY IN Kgs:

MEMBER COMPLETE

SCALE 1:5 | SSE/D | CHD
ALT. a | ALTD E.SATHISH KUMAR | DRN E.SATHISH KUMAR

INDIAN RAILWAY STANDARDS
INTEGRAL COACH FACTORY, CHENNAI - 600038

SHEET 1 OF 1

LWFAC/PP2

82716013 A1

REF.DRG.NO.

DATE OF LATEST ALT.	DATE OF FIRST ISSUE	AME/SME
28/01/26	04/09/25	

ALL DIMENSIONS ARE IN mm UNLESS OTHERWISE SPECIFIED. FOR UNTOLERANCED DIMENSIONS AND ROUGHNESS VALUES, REFER DRAWING NO ICF/STD-9-0-001.
ANY MANUAL ALTERATION SHALL AUTOMATICALLY RENDER THIS DRAWING INVALID. WELDING SYMBOLS ARE AS PER IS:813-1986. WEIGHT GIVEN IN DRAWING IS FOR INDICATIVE PURPOSE ONLY.

82716015

▽ ROUGH MACHINED	(01) ROUGH CLEANED	REVISIONS	
▽▽ FINISH MACHINED	(01b) BURRS REMOVED	ALT. / ZONE	DESCRIPTION / APPROVED & DATE
▽▽▽ FINE FINISH MACHINED	(18) CHAMFERED		

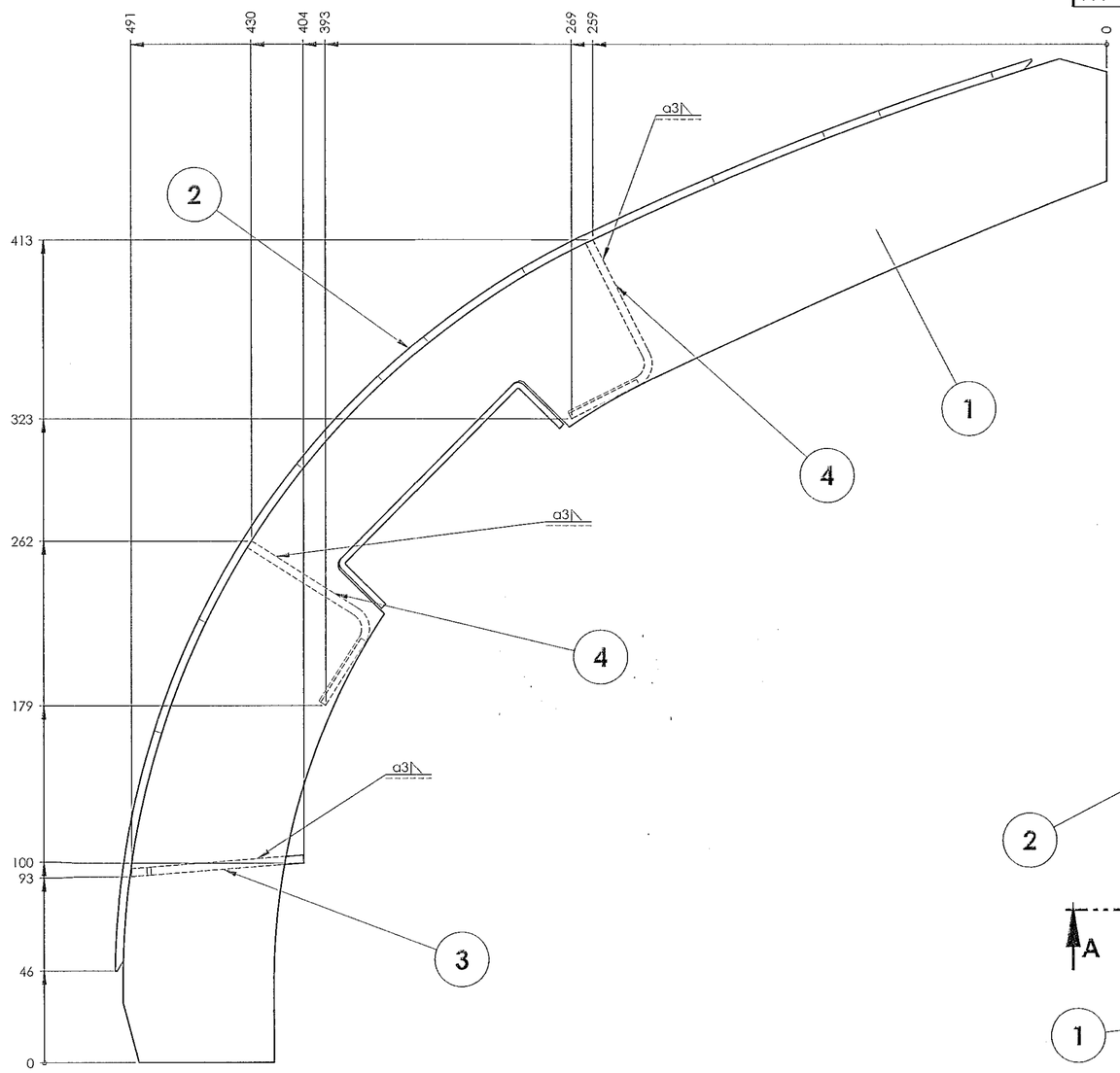

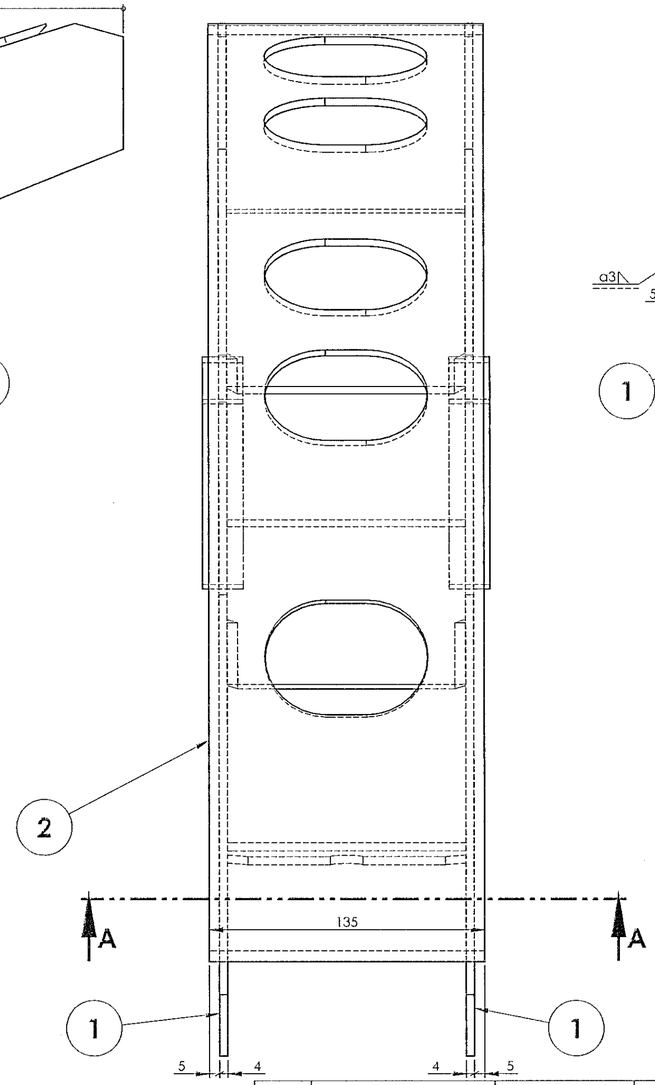

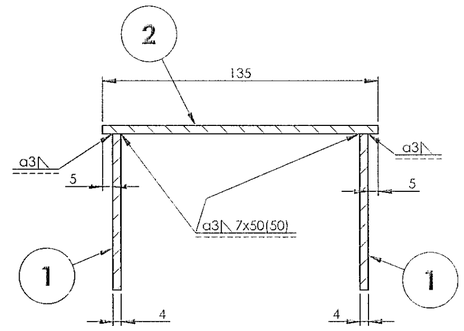

SECTION A-A
SCALE 1 : 2

ALL DIMENSIONS ARE IN mm UNLESS OTHERWISE SPECIFIED. FOR UNTOLERANCED DIMENSIONS AND ROUGHNESS VALUES, REFER DRAWING NO ICF/STD-9-0-001.
ANY MANUAL ALTERATION SHALL AUTOMATICALLY RENDER THIS DRAWING INVALID. WELDING SYMBOLS ARE AS PER IS:813-1986.

NOTE:

1. STAINLESS STEEL ELECTRODE OF SAME COMPOSITION AS PER TABLE-3 OF RDSO/SPEC C-K201 SHALL BE USED FOR WELDING.
2. ALL WELD SPATTERS SHALL BE GROUND.
3. ALL WELDED JOINTS SHALL BE PICKLED AND PASSIVATED BEFORE SURFACE TREATMENT.
4. ALL SHARP CORNERS SHALL BE ROUNDED OFF.
5. ALL WELDINGS SHALL BE TIG WELDING UNLESS OTHERWISE SPECIFIED.
6. ALL BUTT WELDINGS TO BE DONE AT COACH OUTSIDE AND ROUGH GRINDING TO BE DONE ON THE SAME SIDE. PENETRATION SHOULD NOT BE GROUND.

QTY.	DESCRIPTION	DIMENSIONS	ITEM NO.	REF.DRGS.	MATL	WT/UNIT IN KGS	REMARKS
2	STIFFENING ANGLE		4	AAA16934		0.434	
1	WEB		3	AAA16933		0.319	
1	FLANGE		2	AAA16932		2.367	
2	ROOF ARCH COMPLETE		1	82716018		1681.75	

GROUP: 1-6 Roof Construction | SURFACE AREA IN Sq.m.: 0.469 | WT/ASSY IN Kgs: 6.918

ROOF ARCH COMPLETE

SCALE 1:5 | SSE/D | CHD | ALT | ALTD | DRN: E.SATHISH KUMAR

LWFAC/PP2

INDIAN RAILWAY STANDARDS
INTEGRAL COACH FACTORY, CHENNAI - 600038

SHEET 1 OF 1

82716015 | A2

DATE OF LATEST ALT.	DATE OF FIRST ISSUE	AME/SME
	04/09/25	

REF.DRG.NO.

82716016

▽ ROUGH MACHINED	(01) ROUGH CLEANED		
▽▽ FINISH MACHINED	(01b) BURRS REMOVED		
▽▽▽ FINE FINISH MACHINED	(18) CHAMFERED		

REVISIONS			
ALT.	ZONE	DESCRIPTION	APPROVED & DATE

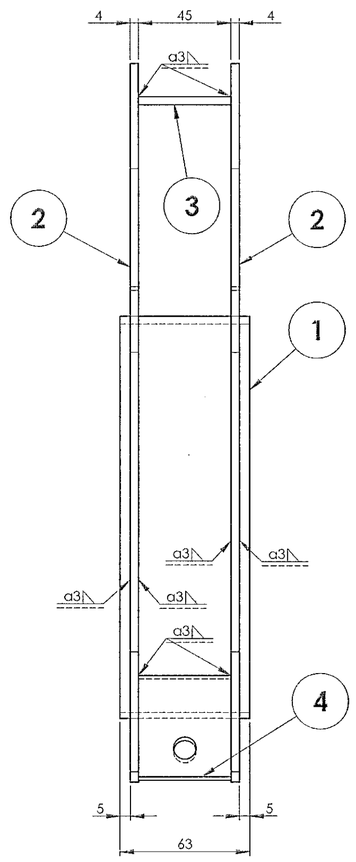

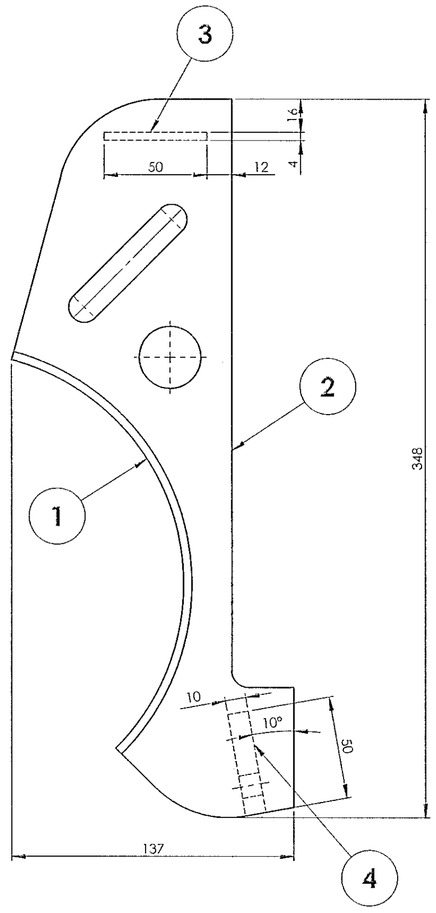

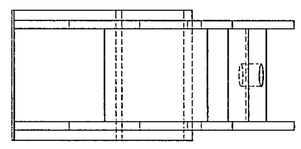

NOTE:

1. STAINLESS STEEL ELECTRODE OF SAME COMPOSITION AS PER TABLE-3 OF RDSO/SPEC C-K201 SHALL BE USED FOR WELDING.
2. ALL WELD SPATTERS SHALL BE GROUND.
3. ALL WELDED JOINTS SHALL BE PICKLED AND PASSIVATED BEFORE SURFACE TREATMENT.
4. ALL SHARP CORNERS SHALL BE ROUNDED OFF.
5. ALL WELDINGS SHALL BE TIG WELDING UNLESS OTHERWISE SPECIFIED.
6. FOR WELD TESTING PREFERANCES REFER DRG.NO.ICF/STD-9-0-998.
7. FOR WELD PROCEDURE SPECFICATION REFER DRG.NO.ICF/STD-9-0-999.

QTY.	DESCRIPTION	DIMENSIONS	ITEM NO.	REF.DRGS.	MATL	WT/UNIT IN KGS	REMARKS
1	PLATE		4	AAB10073		0.172	
1	PLATE		3	AAB10010		0.072	
2	PLATE		2	AAF16201		0.610	
1	RING		1	AAB10008		0.483	

GROUP: 1-6 Roof Construction

SURFACE AREA IN Sq.m.: 0.130

WT/ASSY IN Kgs:

AUX. WATER TANK FIXING BRACKET

SCALE 1:2

SSE/D

CHD

ALT -

ALTD

DRN E.SATHISH KUMAR

LWFAC/PP2

INDIAN RAILWAY STANDARDS

INTEGRAL COACH FACTORY, CHENNAI - 600038

SHEET 1 OF 1

82716016

A2

DATE OF LATEST ALT.	DATE OF FIRST ISSUE	AME/SME
	04/09/25	

REF.DRG.NO.59310015

ALL DIMENSIONS ARE IN mm UNLESS OTHERWISE SPECIFIED. FOR UNTOLERANCED DIMENSIONS AND ROUGHNESS VALUES, REFER DRAWING NO ICF/STD-9-0-001.
ANY MANUAL ALTERATION SHALL AUTOMATICALLY RENDER THIS DRAWING INVALID. WELDING SYMBOLS ARE AS PER IS:813-1986. WEIGHT GIVEN IN DRAWING IS FOR INDICATIVE PURPOSE ONLY

82716017

▽ ROUGH MACHINED	(01) ROUGH CLEANED		
▽▽ FINISH MACHINED	(016) BURRS REMOVED		
▽▽▽ FINE FINISH MACHINED	(18) CHAMFERED		

REVISIONS

ALT.	ZONE	DESCRIPTION	APPROVED & DATE

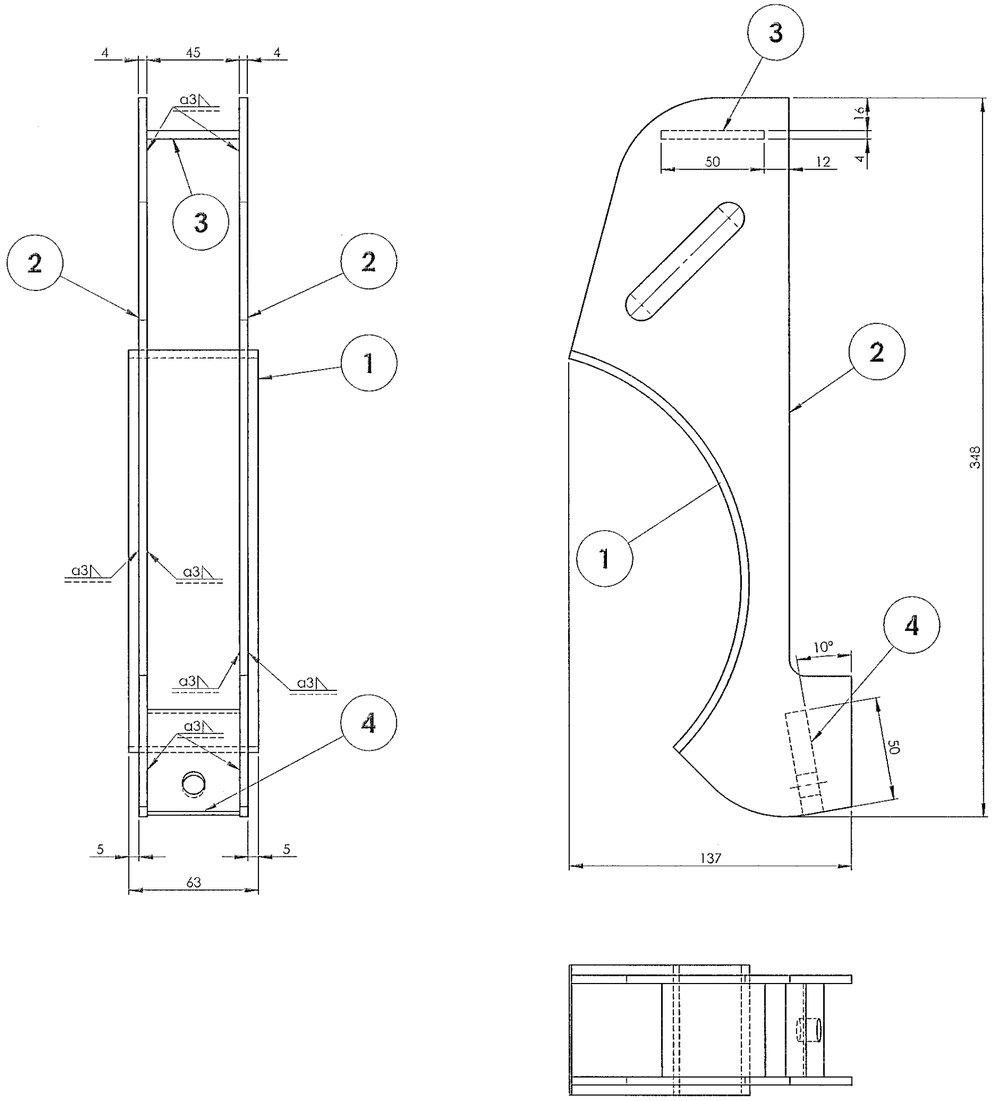

NOTE:

1. STAINLESS STEEL ELECTRODE OF SAME COMPOSITION AS PER TABLE-3 OF RDSO/SPEC C-K201 SHALL BE USED FOR WELDING.
2. ALL WELD SPATTERS SHALL BE GROUND.
3. ALL WELDED JOINTS SHALL BE PICKLED AND PASSIVATED BEFORE SURFACE TREATMENT.
4. ALL SHARP CORNERS SHALL BE ROUNDED OFF.
5. ALL WELDINGS SHALL BE TIG WELDING UNLESS OTHERWISE SPECIFIED.
6. FOR WELD TESTING PREFERANCES REFER DRG.NO.ICF/STD-9-0-998.
7. FOR WELD PROCEDURE SPECFICATION REFER DRG.NO.ICF/STD-9-0-999.

QTY.	DESCRIPTION	DIMENSIONS	ITEM NO.	REF.DRGS.	MATL	WT/UNIT IN KGS	REMARKS
1	PLATE		4	AAB10073		0.172	
1	PLATE		3	AAB10010		0.072	
2	PLATE		2	AAF16202		0.637	
1	RING		1	AAB10008		0.483	

GROUP: 1-6 Roof Construction | SURFACE AREA IN Sq.m.:0.133 | WT/ASSY IN Kgs:2.159

AUX. WATER TANK FIXING BRACKET

SCALE 1:2 | SSE/D | CHD | ALT - | ALTD | DRN: E.SATHISH KUMAR

LWFAC/PP2

INDIAN RAILWAY STANDARDS
INTEGRAL COACH FACTORY, CHENNAI - 600038

SHEET 1 OF 1

82716017 | A2

DATE OF LATEST ALT.	DATE OF FIRST ISSUE	AME/SME
	04/09/25	

REF.DRG.NO.

ALL DIMENSIONS ARE IN mm UNLESS OTHERWISE SPECIFIED. FOR UNTOLERANCED DIMENSIONS AND ROUGHNESS VALUES, REFER DRAWING NO ICF/STD-9-0-001.
ANY MANUAL ALTERATION SHALL AUTOMATICALLY RENDER THIS DRAWING INVALID. WELDING SYMBOLS ARE AS PER IS:813-1986.

82716018

▽ ROUGH MACHINED	(01) ROUGH CLEANED		
▽▽ FINISH MACHINED	(01b) BURRS REMOVED		
▽▽▽ FINE FINISH MACHINED	(18) CHAMFERED		

REVISIONS			
ALT.	ZONE	DESCRIPTION	APPROVED & DATE

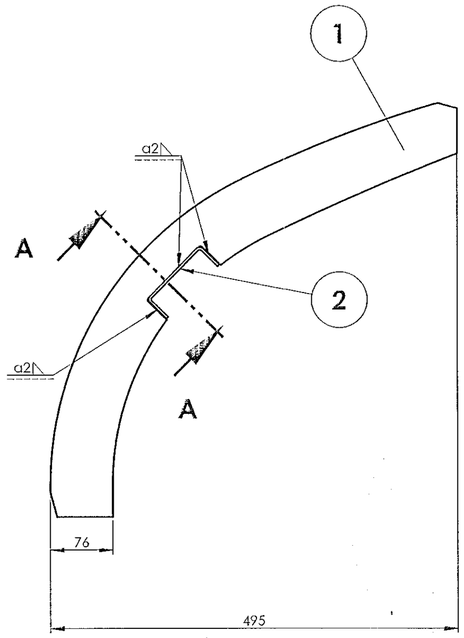

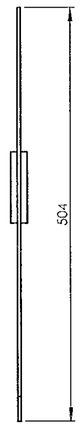

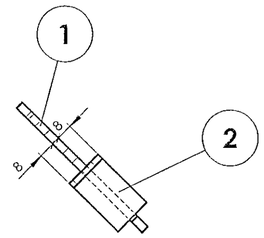

SECTION A-A
SCALE 1 : 2

NOTE:

1. STAINLESS STEEL ELECTRODE OF SAME COMPOSITION AS PER TABLE-3 OF RDSO/SPEC C-K201 SHALL BE USED FOR WELDING.
2. ALL WELD SPATTERS SHALL BE GROUND.
3. ALL WELDED JOINTS SHALL BE PICKLED AND PASSIVATED BEFORE SURFACE TREATMENT.
4. ALL SHARP CORNERS SHALL BE ROUNDED OFF.
5. ALL WELDINGS SHALL BE TIG WELDING UNLESS OTHERWISE SPECIFIED.
6. FOR WELD TESTING PREFERANCES REFER DRG.NO.ICF/STD-9-0-998.
7. FOR WELD PROCEDURE SPECFICATION REFER DRG.NO.ICF/STD-9-0-999.

QTY.	DESCRIPTION	DIMENSIONS	ITEM NO.	REF.DRGS.	MATL	WT/UNIT IN KGS	REMARKS
1	BACK PIECE		2	AAF16161		0.07	
1	ROOF ARCH		1	AAF16158		1.623	

GROUP: - | SURFACE AREA IN Sq.m.: 114996.21 | WT/ASSY IN Kgs:

ROOF ARCH COMPLETE

SCALE 1:5	SSE/D	
	CHD	
ALT -	ALTD	
	DRN	SATHISH KUMAR

LWFAC/PP2

INDIAN RAILWAY STANDARDS
INTEGRAL COACH FACTORY, CHENNAI - 600038

SHEET 1 OF 1

82716018 A2

DATE OF LATEST ALT.	DATE OF FIRST ISSUE	AME/SME
	04/09/25	

REF.DRG.NO.-

ALL DIMENSIONS ARE IN mm UNLESS OTHERWISE SPECIFIED. FOR UNTOLERANCED DIMENSIONS AND ROUGHNESS VALUES, REFER DRAWING NO ICF/STD-9-0-001.
ANY MANUAL ALTERATION SHALL AUTOMATICALLY RENDER THIS DRAWING INVALID. WELDING SYMBOLS ARE AS PER EN ISO 2553. WEIGHT GIVEN IN DRAWING IS FOR INDICATIVE PURPOSE ONLY

82716019

▽ ROUGH MACHINED	(01) ROUGH CLEANED
▽▽ FINISH MACHINED	(01b) BURRS REMOVED
▽▽▽ FINE FINISH MACHINED	(16) CHAMFERED

REVISIONS			
ALT.	ZONE	DESCRIPTION	APPROVED & DATE

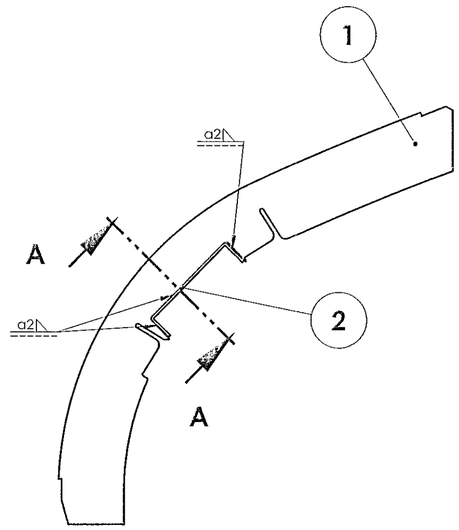

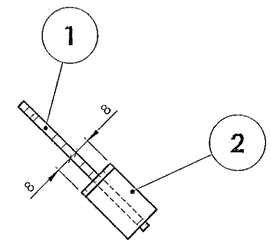

SECTION A-A
SCALE 1 : 2

ALL DIMENSIONS ARE IN mm UNLESS OTHERWISE SPECIFIED. FOR UNTOLERANCED DIMENSIONS AND ROUGHNESS VALUES, REFER DRAWING NO ICF/STD-9-0-001.
ANY MANUAL ALTERATION SHALL AUTOMATICALLY RENDER THIS DRAWING INVALID. WELDING SYMBOLS ARE AS PER EN ISO 2553. WEIGHT GIVEN IN DRAWING IS FOR INDICATIVE PURPOSE ONLY

NOTE:

1. STAINLESS STEEL ELECTRODE OF SAME COMPOSITION AS PER TABLE-3 OF RDSO/SPEC C-K201 SHALL BE USED FOR WELDING.
2. ALL WELD SPATTERS SHALL BE GROUND.
3. ALL WELDED JOINTS SHALL BE PICKLED AND PASSIVATED BEFORE SURFACE TREATMENT.
4. ALL SHARP CORNERS SHALL BE ROUNDED OFF.
5. ALL WELDINGS SHALL BE TIG WELDING UNLESS OTHERWISE SPECIFIED.
6. FOR WELD TESTING PREFERANCES REFER DRG.NO.ICF/STD-9-0-998.
7. FOR WELD PROCEDURE SPECFICATION REFER DRG.NO.ICF/STD-9-0-999.

QTY.	DESCRIPTION	DIMENSIONS	ITEM NO.	REF.DRGS.	MATL	WT/UNIT IN KGS	REMARKS
1	BACK PIECE		2	AAF16161		0.09	
1	ROOF ARCH		1	AAF16159		1.629	

GROUP: 1-6 Roof Construction | SURFACE AREA IN Sq.m.: 117664.52 | WT/ASSY IN Kgs:

ROOF ARCH COMPLETE

SCALE 1:5 | SSE/D | CHD | ALT - | ALTD | DRN: E.SATHISH KUMAR

INDIAN RAILWAY STANDARDS
INTEGRAL COACH FACTORY, CHENNAI - 600038

SHEET 1 OF 1

LWFAC/PP2

82716019 | A2

DATE OF LATEST ALT.	DATE OF FIRST ISSUE	AME/SME
	04/09/25	

REF.DRG.NO.-

82716020

▽ ROUGH MACHINED	(01) ROUGH CLEANED		
▽▽ FINISH MACHINED	(01b) BURRS REMOVED		
▽▽▽ FINE FINISH MACHINED	(16) CHAMFERED		

REVISIONS			
ALT.	ZONE	DESCRIPTION	APPROVED & DATE

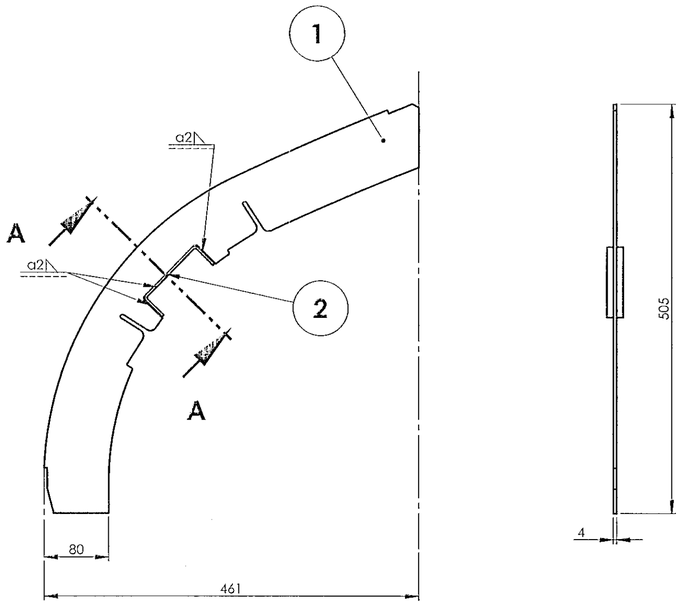

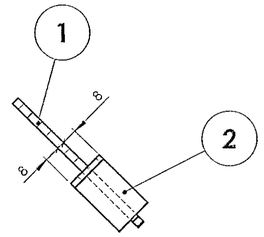

SECTION A-A
SCALE 1 : 2

ALL DIMENSIONS ARE IN mm UNLESS OTHERWISE SPECIFIED. FOR UNTOLERANCED DIMENSIONS AND ROUGHNESS VALUES, REFER DRAWING NO ICF/STD-9-0-001.
ANY MANUAL ALTERATION SHALL AUTOMATICALLY RENDER THIS DRAWING INVALID. WELDING SYMBOLS ARE AS PER EN ISO 2553. WEIGHT GIVEN IN DRAWING IS FOR INDICATIVE PURPOSE ONLY

NOTE:

1. STAINLESS STEEL ELECTRODE OF SAME COMPOSITION AS PER TABLE-3 OF RDSO/SPEC C-K201 SHALL BE USED FOR WELDING.
2. ALL WELD SPATTERS SHALL BE GROUND.
3. ALL WELDED JOINTS SHALL BE PICKLED AND PASSIVATED BEFORE SURFACE TREATMENT.
4. ALL SHARP CORNERS SHALL BE ROUNDED OFF.
5. ALL WELDINGS SHALL BE TIG WELDING UNLESS OTHERWISE SPECIFIED.
6. FOR WELD TESTING PREFERANCES REFER DRG.NO.ICF/STD-9-0-998.
7. FOR WELD PROCEDURE SPECFICATION REFER DRG.NO.ICF/STD-9-0-999.

QTY.	DESCRIPTION	DIMENSIONS	ITEM NO.	REF.DRGS.	MATL	WT/UNIT IN KGS	REMARKS
1	BACK PIECE		2	AAF16161		0.07	
1	ROOF ARCH		1	AAF16160		1.614	

GROUP: 1-6 Roof Construction | SURFACE AREA IN Sq.m.: 114918.25 | WT/ASSY IN Kgs:

ROOF ARCH COMPLETE

SCALE 1:5 | SSE/D | CHD | ALT - | ALTD | DRN | E.SATHISH KUMAR

LWFAC/PP2

INDIAN RAILWAY STANDARDS
INTEGRAL COACH FACTORY, CHENNAI - 600038

SHEET 1 OF 1

82716020 | A2

DATE OF LATEST ALT.	DATE OF FIRST ISSUE	AME/SME
	04/09/25	

REF.DRG.NO.-

AAA10962

▽ ROUGH MACHINED	ROUGH CLEANED
▽▽ FINISH MACHINED	BURRS REMOVED
▽▽▽ VERY FINISH MACHINED	CHAMFERED

REVISIONS			
ALT.	ZONE	DESCRIPTION	APPROVED & DATE

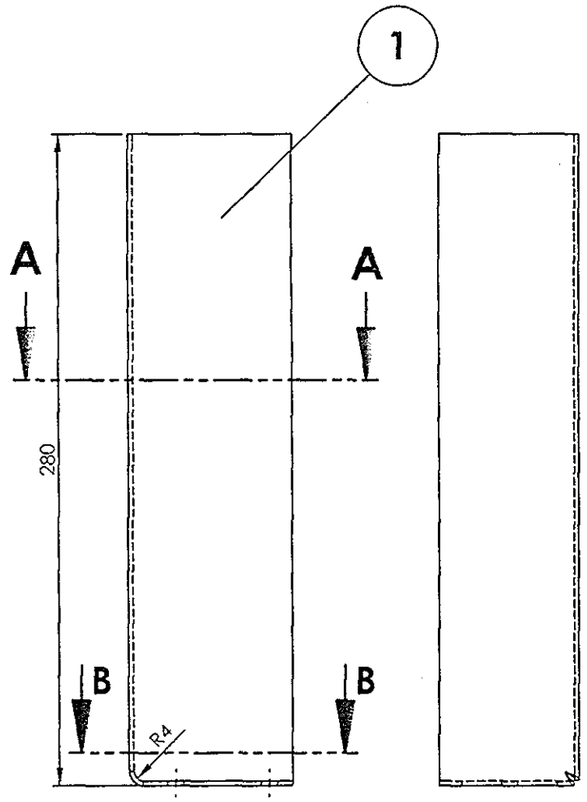

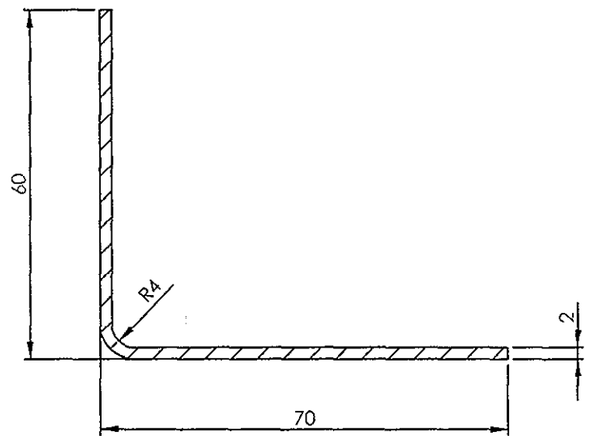

SECTION A-A
SCALE 1 : 1

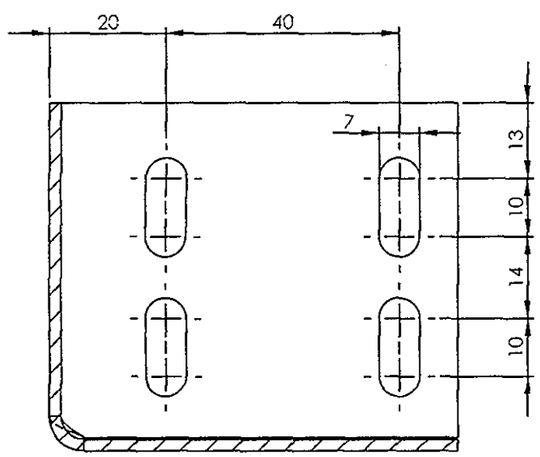

SECTION B-B
SCALE 1 : 1

ALL DIMENSIONS ARE IN mm UNLESS OTHERWISE SPECIFIED. FOR UNTOLERANCED DIMENSIONS AND ROUGHNESS VALUES, REFER DRAWING NO ICF/SID 9 0 001.
ANY MANUAL ALTERATION SHALL AUTOMATICALLY RENDER THIS DRAWING INVALID. WELDING SYMBOLS ARE AS PER IS: 813 1986.

REF.DRG.NO.3 10113.0.20.095.119

QTY.	DESCRIPTION	DIMENSIONS	ITEM NO.	REF. DRGS	MATL.SPEC.	WT/UNIT IN KGS	REMARKS
1	BRACKET	2x126x346	1		RDSO/SPEC C-K201 X2CrNi12	0.615	

GROUP: 1-0 | SURFACE AREA IN Sq.m.:0.079 | WT/ASSY IN Kgs:0.615

BRACKET

SCALE 1:2.5	SSE/D	
	CHD	
ALT.	ALTD	
	DRN	L.PANDURANGA RAO

INDIAN RAILWAY STANDARDS
INTEGRAL COACH FACTORY, CHENNAI - 600038

SHEET 1 OF 1

AAA10962 A3

DATE OF LATEST ALT.	DATE OF FIRST ISSUE	AME/SME
	10-04-2013	16/4/13

AAA16493

▽ ROUGH MACHINED	(01) ROUGH CLEANED
▽▽ FINISH MACHINED	(01b) BURRS REMOVED
▽▽▽ FINE FINISH MACHINED	(18) CHAMFERED

REVISIONS			
ALT.	ZONE	DESCRIPTION	APPROVED & DATE
a		DRAWING REVISED.	

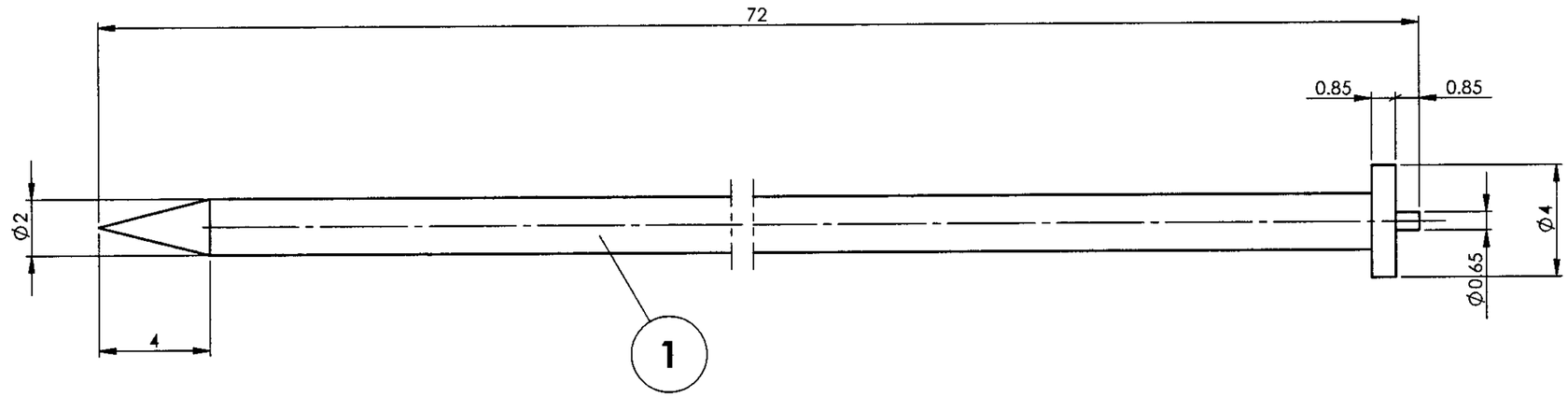

ALL DIMENSIONS ARE IN mm UNLESS OTHERWISE SPECIFIED. FOR UNTOLERANCED DIMENSIONS AND ROUGHNESS VALUES, REFER DRAWING NO ICF/STD-9-0-001.
ANY MANUAL ALTERATION SHALL AUTOMATICALLY RENDER THIS DRAWING INVALID. WELDING SYMBOLS ARE AS PER EN ISO 2553.
WEIGHT GIVEN IN DRAWING IS FOR INDICATIVE PURPOSE ONLY

REF.DRG.NO.mi001576, ITEM-1

Default	DESCRIPTION	DIMENSIONS	ITEM NO.	REF. DRGS	MATL.SPEC.	WT/UNIT IN KGS.	REMARKS
1	WELDING PIN	Ø 4 x 72	1		IS:6528 X04Cr18Ni10	0.002	

GROUP: 1-6 ROOF CONSTRUCTION | SURFACE AREA IN Sq.m.:0.000 | WT/ASSY IN Kgs:

WELDING PIN

SCALE 5:1	SSE/D	
	CHD	
ALT. a	ALTD	A.Palanichamy
	DRN	3D:A.Palanichamy 2D:P.Murugan

DATE OF LATEST ALT.	DATE OF FIRST ISSUE	AME/SME
06-02-2024	19-07-2013	

INDIAN RAILWAY STANDARDS

INTEGRAL COACH FACTORY, CHENNAI - 600038

SHEET 1 OF 1

AAA16493 A3

AAA16494

▽ ROUGH MACHINED	(01) ROUGH CLEANED
▽▽ FINISH MACHINED	(01b) BURRS REMOVED
▽▽▽ FINE FINISH MACHINED	(18) CHAMFERED

REVISIONS			
ALT.	ZONE	DESCRIPTION	APPROVED & DATE
a		DRAWING REVISED.	

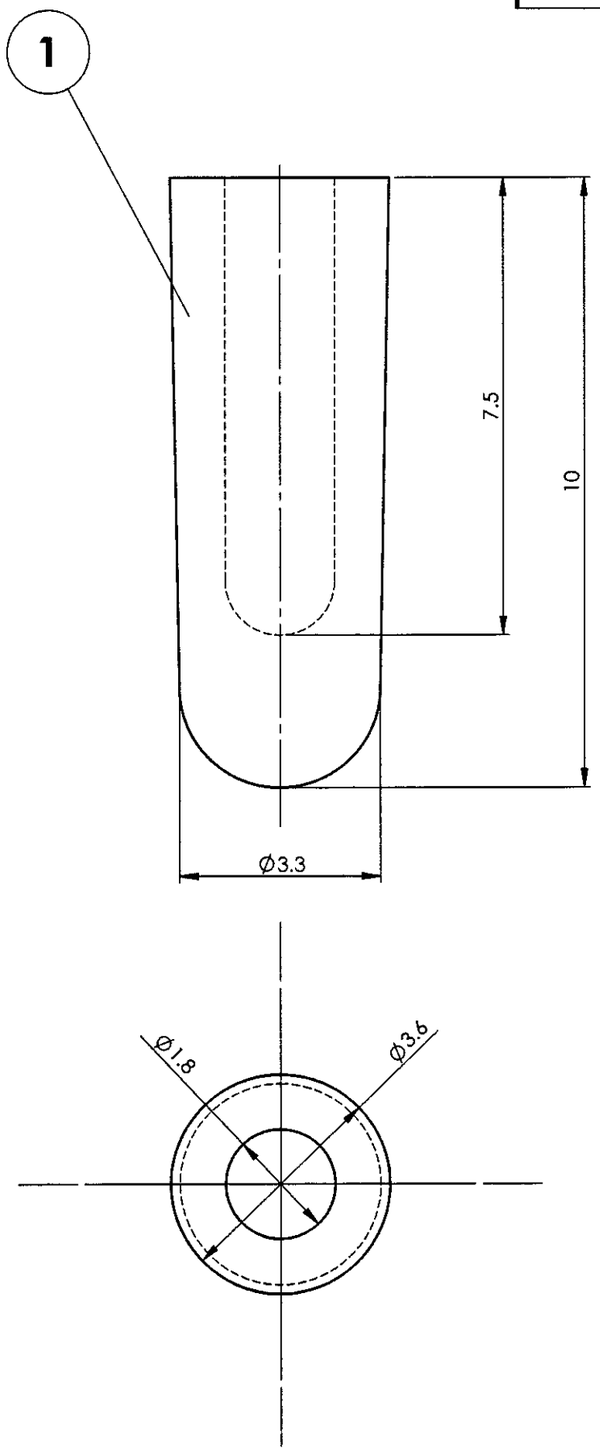

ALL DIMENSIONS ARE IN mm UNLESS OTHERWISE SPECIFIED. FOR UNTOLERANCED DIMENSIONS AND ROUGHNESS VALUES, REFER DRAWING NO ICF/STD-9-0-001.
ANY MANUAL ALTERATION SHALL AUTOMATICALLY RENDER THIS DRAWING INVALID. WELDING SYMBOLS ARE AS PER EN ISO 2553.
WEIGHT GIVEN IN DRAWING IS FOR INDICATIVE PURPOSE ONLY

REF.DRG.NO.mi001576, ITEM-2

Default	DESCRIPTION	DIMENSIONS	ITEM NO.	REF. DRGS	MATL.SPEC.	WT/UNIT IN KGS	REMARKS
1	CAP	Ø3.6x10	1		IS:5831	0.000	

GROUP: 1-6 ROOF CONSTRUCTION | SURFACE AREA IN Sq.m.:0.000 | WT/ASSY IN Kgs:

CAP

SCALE	SSE/D	
10:1	CHD	
ALT. a	ALTD	A.Palanichamy
	DRN	3D:A.Palanichamy 2D:P.Murugan

DATE OF LATEST ALT.	DATE OF FIRST ISSUE	AME/SME
06-07-2024	19-07-2013	

INDIAN RAILWAY STANDARDS

INTEGRAL COACH FACTORY, CHENNAI - 600038

SHEET 1 OF 1

AAA16494 A3

AAA16495

▽ ROUGH MACHINED	(01) ROUGH CLEANED
▽▽ FINISH MACHINED	(01b) BURRS REMOVED
▽▽▽ FINE FINISH MACHINED	(18) CHAMFERED

REVISIONS			
ALT.	ZONE	DESCRIPTION	APPROVED & DATE
a		DRAWING REVISED.	

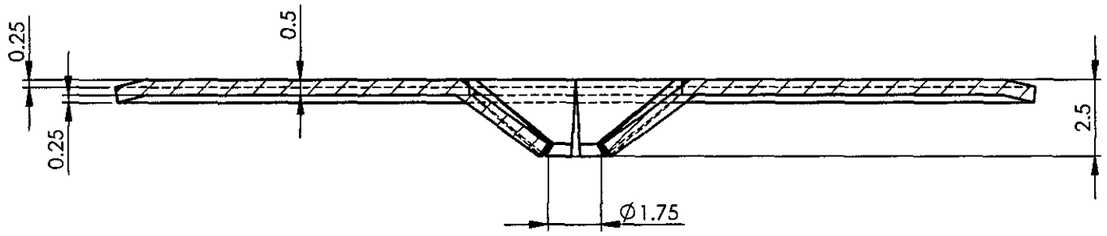

SECTION A-A
SCALE 5 : 1

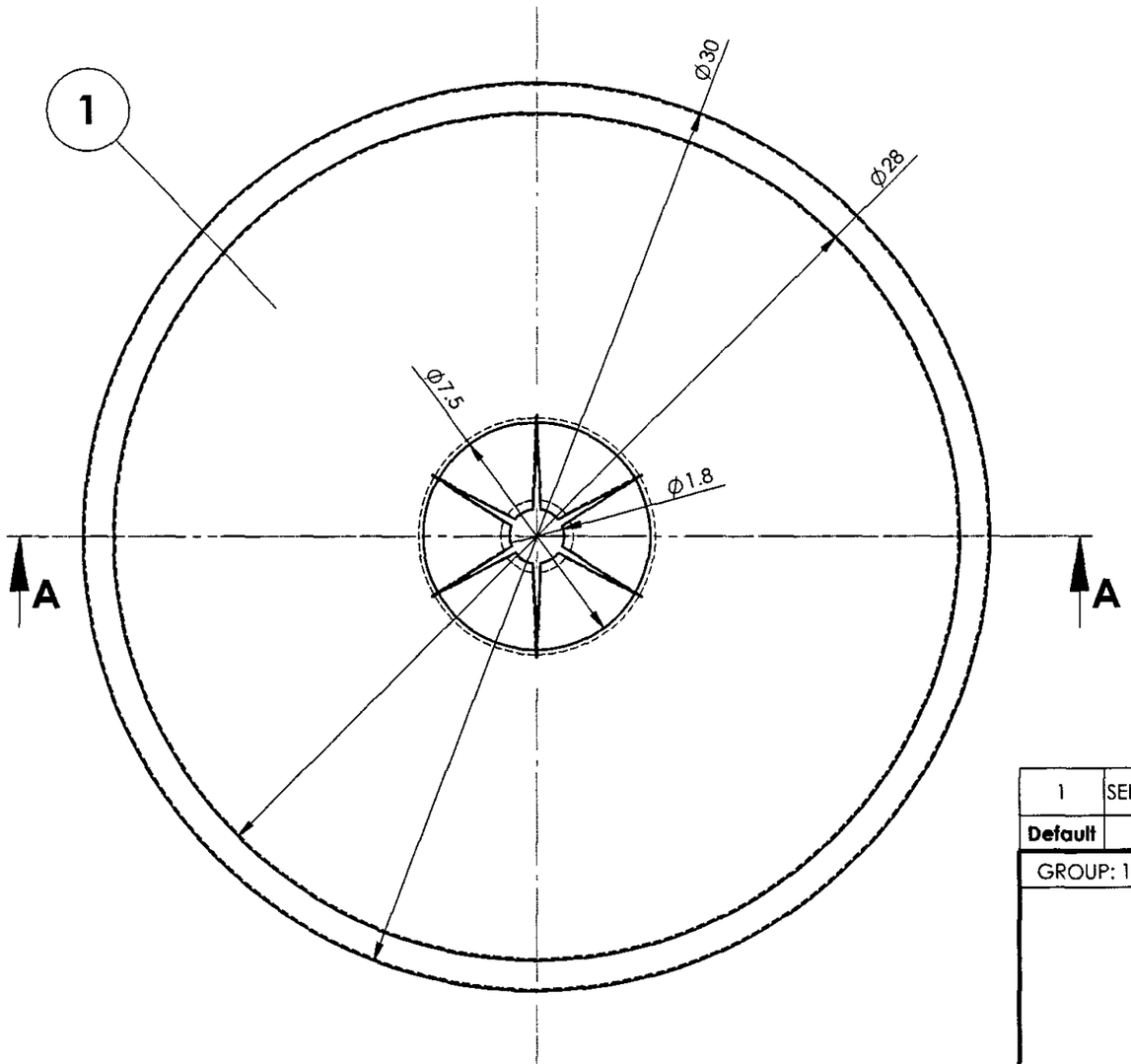

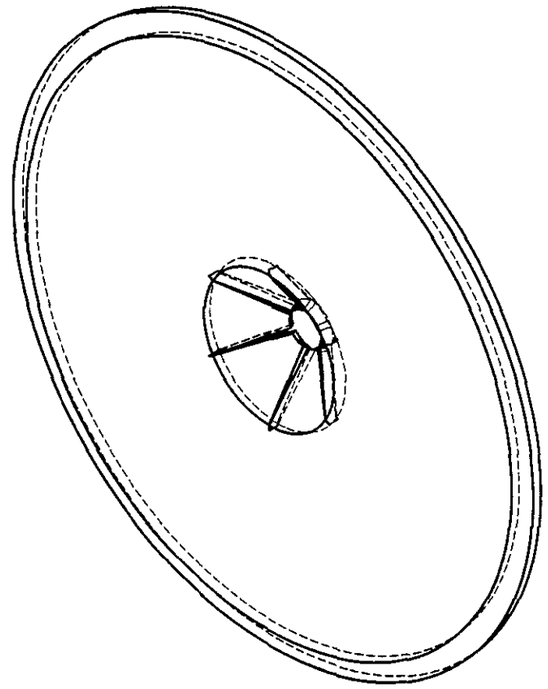

ISOMETRIC VIEW

ALL DIMENSIONS ARE IN mm UNLESS OTHERWISE SPECIFIED. FOR UNTOLERANCED DIMENSIONS AND ROUGHNESS VALUES, REFER DRAWING NO ICF/STD-9-0-001.
ANY MANUAL ALTERATION SHALL AUTOMATICALLY RENDER THIS DRAWING INVALID. WELDING SYMBOLS ARE AS PER EN ISO 2553.
WEIGHT GIVEN IN DRAWING IS FOR INDICATIVE PURPOSE ONLY

REF.DRG.NO.mi001576, ITEM-3

Default	DESCRIPTION	DIMENSIONS	ITEM NO.	REF. DRGS	MATL.SPEC.	WT/UNIT IN KGS	REMARKS
1	SERRATED SPRING WASHER	DIA 30 x 0.5 THICK	1		IS:4072 Gr.65C6	0.003	COATING TO MDTS057

GROUP: 1-6 ROOF CONSTRUCTION | SURFACE AREA IN Sq.m.:0.001 | WT/ASSY IN Kgs:

SERRATED SPRING WASHER

SCALE 2:1	SSE/D	
	CHD	
ALT. a	ALTD	A.Palanichamy
	DRN	3D:A.Palanichamy 2D:P.Murugan

DATE OF LATEST ALT.	DATE OF FIRST ISSUE	AME/SME
06-02-2024	19-07-2013	

INDIAN RAILWAY STANDARDS
INTEGRAL COACH FACTORY, CHENNAI - 600038

SHEET 1 OF 1

AAA16495 A3

AAA16900

▽ ROUGH MACHINED	ROUGH CLEANED
▽▽ FINISH MACHINED	BURRS REMOVED
▽▽▽ FINE FINISH MACHINED	CHAMFERED

REVISIONS			
ALT.	ZONE	DESCRIPTION	APPROVED & DATE

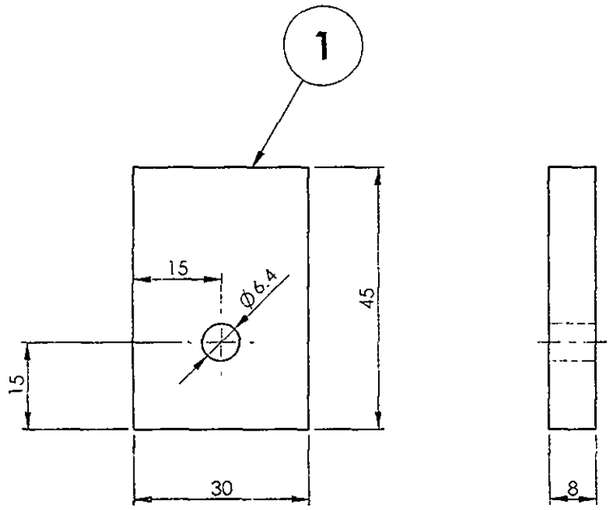

ALL DIMENSIONS ARE IN mm UNLESS OTHERWISE SPECIFIED. FOR UNTOLERANCED DIMENSIONS ARE ROUGHNESS VALUES, REFER DRAWING NO ICF/STD 9 0 001.
ANY MANUAL ALTERATION SHALL AUTOMATICALLY RENDER THIS DRAWING INVALID. WELDING SYMBOLS ARE AS PER IS: 813-1986.

REF.DRG.NO.4.10113.0.20.095.138

QTY.	DESCRIPTION	DIMENSIONS	ITEM NO.	REF. DRGS	MATL.SPEC.	WT/UNIT IN KGS	REMARKS
—	GROUNDING FLAP	8 x 30 x 45	1		RDSO/SPEC C-K201 X5 Cr Ni 18 10	0.084	

GROUP: 1-6 ROOF ASSEMBLY | SURFACE AREA IN Sq.m.:0.004 | WT/ASSY IN Kgs:0.083

GROUNDING FLAP

SCALE	SSE/D	
1:1	CHD	
ALT.	ALTD	
	DRN	K.Sriram

INDIAN RAILWAY STANDARDS
INTEGRAL COACH FACTORY, CHENNAI - 600038

SHEET 1 OF 1

AAA16900 A3

DATE OF LATEST ALT.	DATE OF FIRST ISSUE	AME/SME
	21-03-2013	

AAA16917

▽ ROUGH MACHINED	(01) ROUGH CLEANED
▽▽ FINISH MACHINED	(01b) BURRS REMOVED
▽▽▽ FINE FINISH MACHINED	(18) CHAMFERED

REVISIONS			
ALT.	ZONE	DESCRIPTION	APPROVED & DATE
a		ITEM-1 CUTAWAY REVISED. VIEWS UPDATED.	

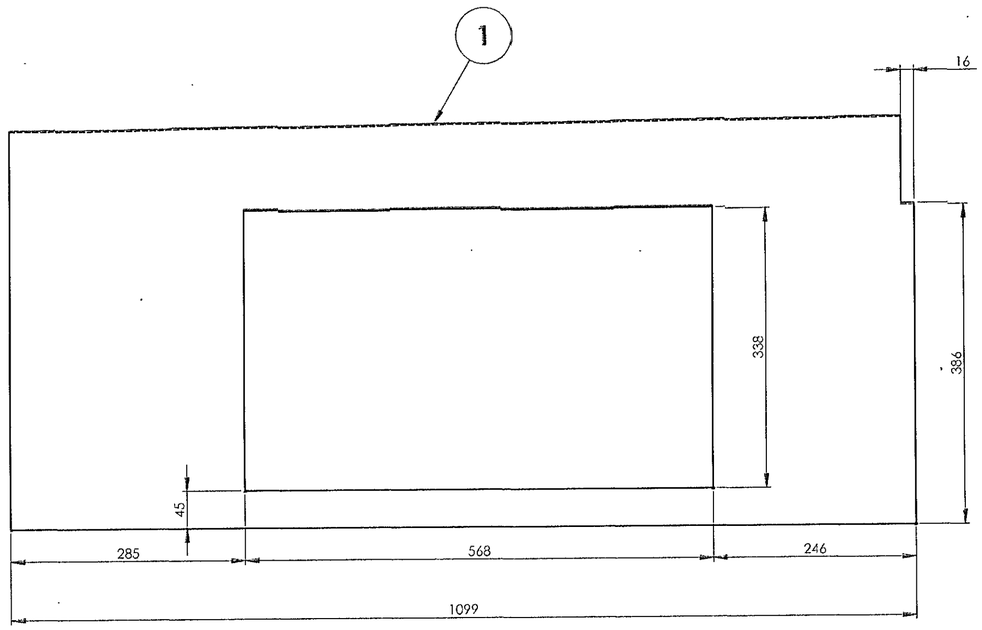

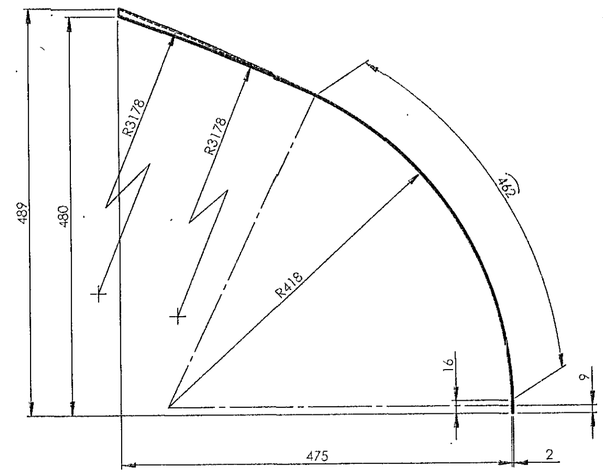

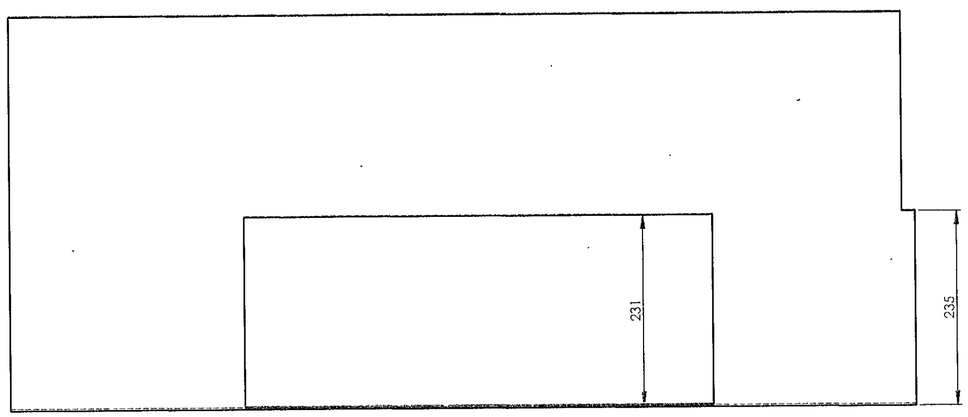

ALL DIMENSIONS ARE IN mm UNLESS OTHERWISE SPECIFIED. FOR UNTOLERANCED DIMENSIONS AND ROUGHNESS VALUES, REFER DRAWING NO. ICF/STD-9-0-001.
ANY MANUAL ALTERATION SHALL AUTOMATICALLY RENDER THIS DRAWING INVALID. WELDING SYMBOLS ARE AS PER IS:813-1986.

Default	DESCRIPTION	DIMENSIONS	ITEM NO.	REF. DRGS	MATL.SPEC.	WT/UNIT IN KGS	REMARKS
1	ROOF SHEET	2 x 740 x 1099	1		RDSO/SPEC C-K201 X2CrNi12	8.879	

GROUP: 1-6 ROOF ASSEMBLY | SURFACE AREA IN Sq.m : 1.137 | WT/ASSY IN Kgs:8.879

ROOF SHEET

SCALE 1:5 | SSE/D | CHD | ALT a | ALTD E.SATHISH KUMAR | DRN K.Sriram

INDIAN RAILWAY STANDARDS
INTEGRAL COACH FACTORY, CHENNAI - 600038

SHEET 1 OF 1

AAA16917 A2

DATE OF LATEST ALT	DATE OF FIRST ISSUE	AME/SME
12/2/26	21-03-2013	

REF.DRG.NO.1 10113.20.220.101

AAA16918

▽ ROUGH MACHINED	(01) ROUGH CLEANED
▽▽ FINISH MACHINED	(01b) BURRS REMOVED
▽▽▽ FINE FINISH MACHINED	(18) CHAMFERED

REVISIONS			
ALT.	ZONE	DESCRIPTION	APPROVED & DATE

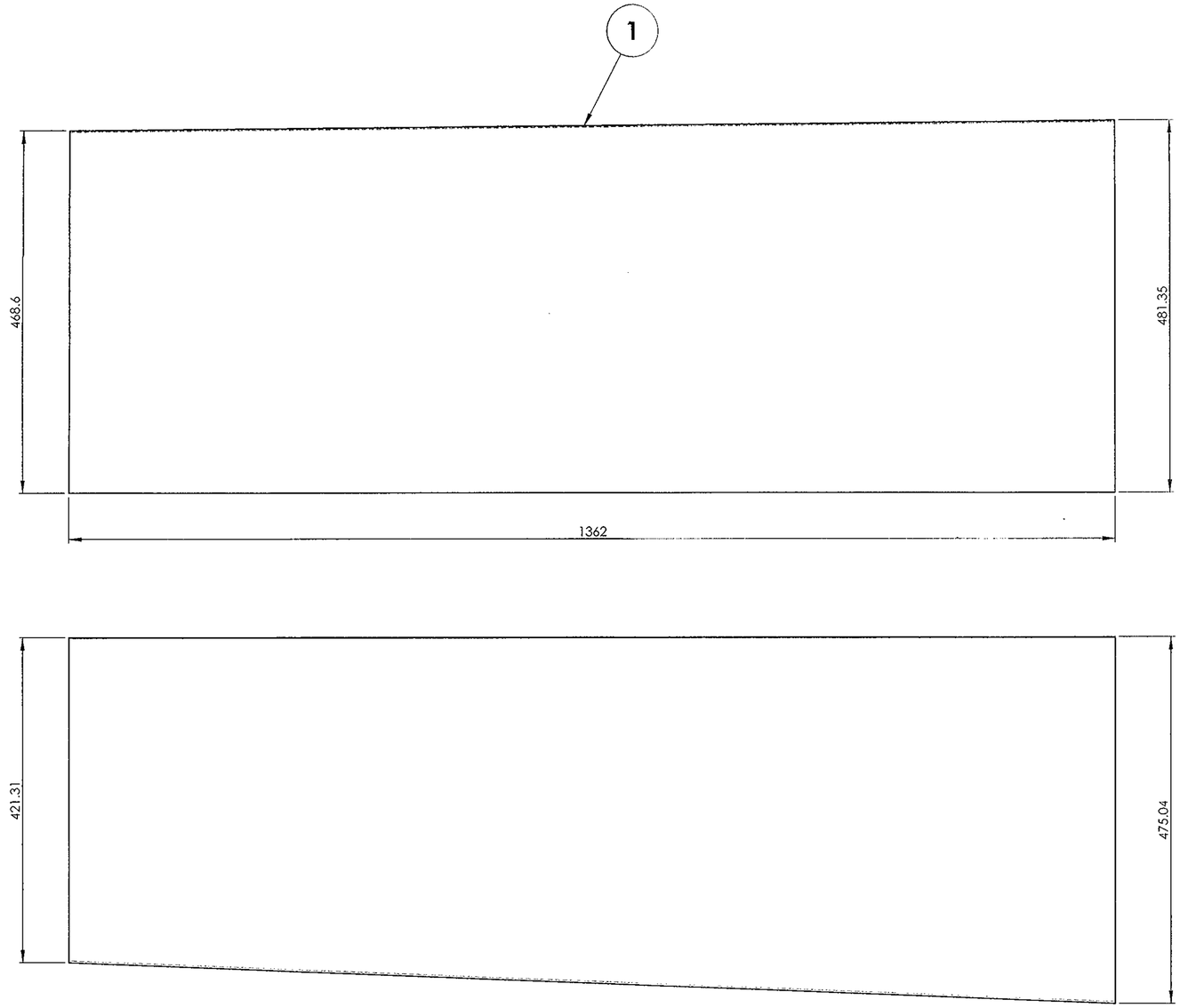

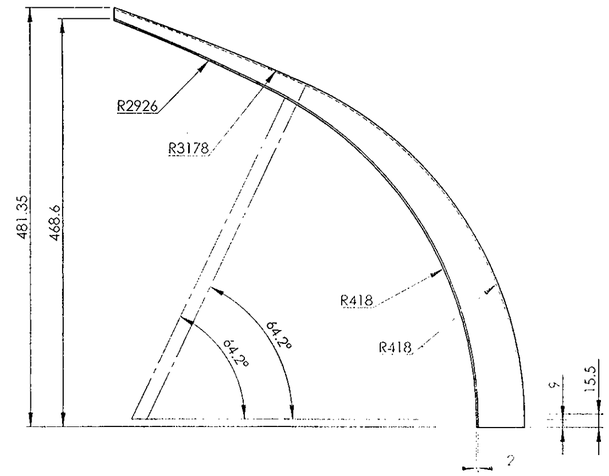

ALL DIMENSIONS ARE IN mm UNLESS OTHERWISE SPECIFIED. FOR UNTOLERANCED DIMENSIONS AND ROUGHNESS VALUES, REFER DRAWING NO ICF/STD-9-0-001.
ANY MANUAL ALTERATION SHALL AUTOMATICALLY RENDER THIS DRAWING INVALID. WELDING SYMBOLS ARE AS PER IS:813-1986.

QTY.	DESCRIPTION	DIMENSIONS	ITEM NO.	REF. DRGS	MATL.SPEC.	WT/UNIT IN KGS	REMARKS
1	ROOF SHEET	2 x 738 x 1385	1		RDSO/SPEC C-K201 X2CrNi12	15.180	

GROUP: 1-6 ROOF ASSEMBLY | SURFACE AREA IN Sq.m.: 1.933 | WT/ASSY IN Kgs: 15.180

ROOF SHEET

SCALE 1:5 | SSE/J | CHD | ALT | ALTD | DRN K.Sriram

INDIAN RAILWAY STANDARDS
INTEGRAL COACH FACTORY, CHENNAI - 600038

SHEET 1 OF 1

AAA16918 A2

DATE OF LATEST ALT.	DATE OF FIRST ISSUE	AME/SME
	21-03-2013	

REF.DRG.NO.1 10113.0.20.220.102

AAA16920

▽ ROUGH MACHINED	(01) ROUGH CLEANED
▽▽ FINISH MACHINED	(01b) BURRS REMOVED
▽▽▽ FINE FINISH MACHINED	(18) CHAMFERED

REVISIONS

ALT.	ZONE	DESCRIPTION	APPROVED & DATE
a		∅30 HOLES ADDED .	

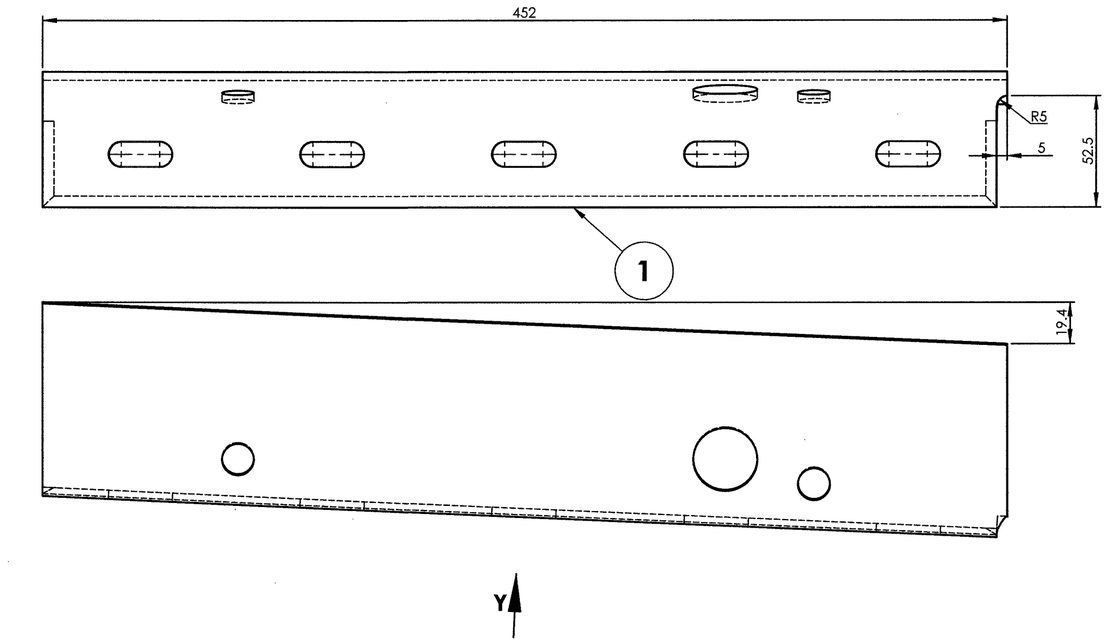

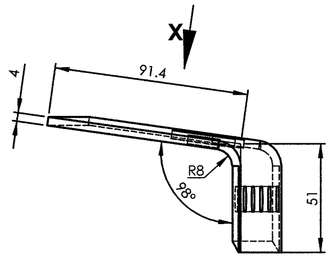

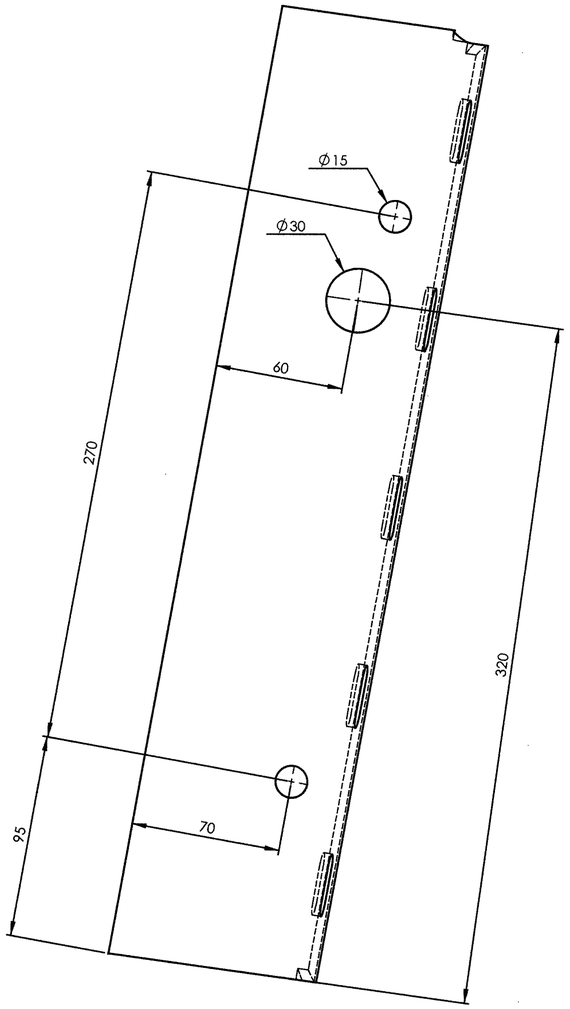

VIEW X

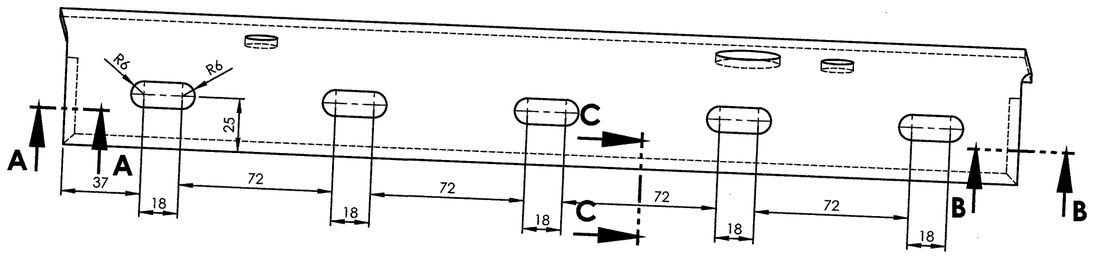

VIEW Y

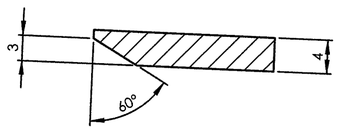

SECTION A-A
SCALE 2 : 1

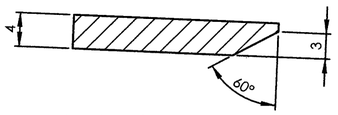

SECTION B-B
SCALE 2 : 1

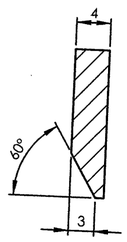

SECTION C-C
SCALE 2 : 1

ALL DIMENSIONS ARE IN mm UNLESS OTHERWISE SPECIFIED. FOR UNTOLERANCED DIMENSIONS AND ROUGHNESS VALUES, REFER DRAWING NO ICF/STD-9-0-001.
ANY MANUAL ALTERATION SHALL AUTOMATICALLY RENDER THIS DRAWING INVALID. WELDING SYMBOLS ARE AS PER IS:813-1986. WEIGHT GIVEN IN DRAWING IS FOR INDICATIVE PURPOSE ONLY

QTY.	DESCRIPTION	DIMENSIONS	ITEM NO.	REF. DRGS	MATL.SPEC.	WT/UNIT IN KGS	REMARKS
1	STIFFENING ANGLE	4 x 157 x 458	1		RDSO/SPEC C-K201 X2CrNi12	1.838	

GROUP: 1-6 ROOF ASSEMBLY | SURFACE AREA IN Sq.m.: 0.123 | WT/ASSY IN Kgs:

STIFFENING ANGLE

SCALE 1:2 | SSE/D | CHD | L. Pandurangaiah

ALT a | ALTD | E.SATHISH KUMAR | DRN | K.Sriram

INDIAN RAILWAY STANDARDS
INTEGRAL COACH FACTORY, CHENNAI - 600038

SHEET 1 OF 1

AAA16920 A2

DATE OF LATEST ALT.	DATE OF FIRST ISSUE	AME/SME
26-2-2019	21-3-2013	

REF.DRG.NO.3 10113.0.20.200.119

AAA16921

▽ ROUGH MACHINED	ROUGH CLEANED
▽▽ FINISH MACHINED	BURRS REMOVED
▽▽▽ FINE FINISH MACHINED	CHAMFERED

REVISIONS			
ALT.	ZONE	DESCRIPTION	APPROVED & DATE

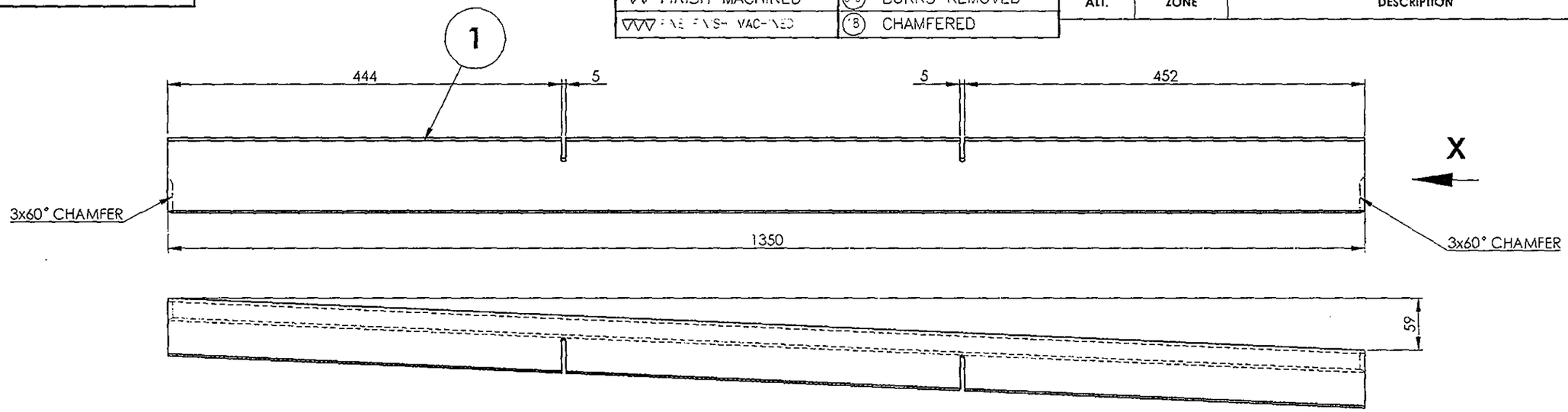

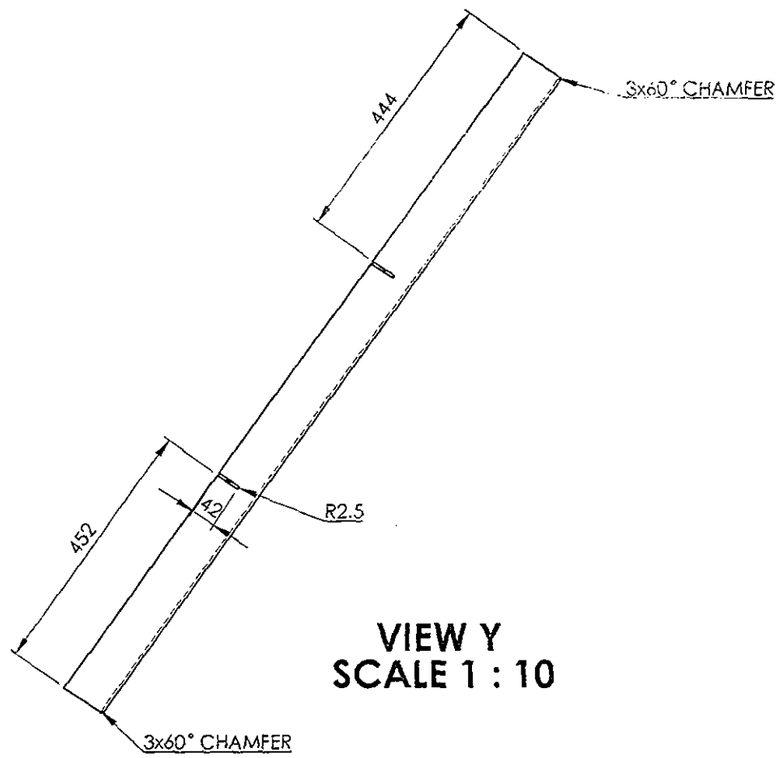

VIEW Y
SCALE 1 : 10

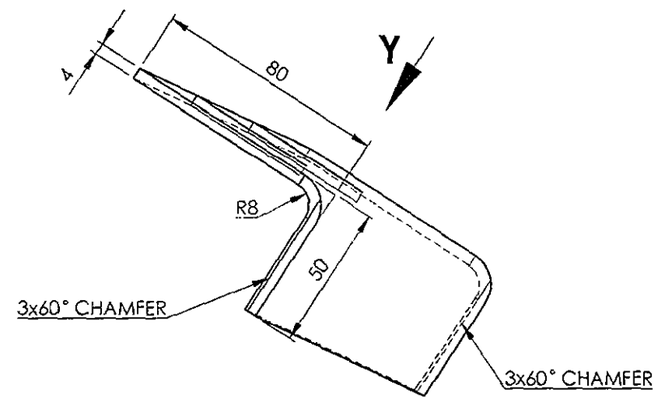

VIEW X
SCALE 1 : 2

ALL DIMENSIONS ARE IN mm UNLESS OTHERWISE SPECIFIED. FOR UNTOLERANCED DIMENSIONS AND ROUGHNESS VALUES, REFER DRAWING NO ICF/STD-9-0-001.
ANY MANUAL ALTERATION SHALL AUTOMATICALLY RENDER THIS DRAWING INVALID. WELDING SYMBOLS ARE AS PER IS: 813-1986.

REF.DRG.NO.2 10113.0.20.200.109

QTY.	DESCRIPTION	DIMENSIONS	ITEM NO.	REF. DRGS	MATL.SPEC.	WT/UNIT IN KGS	REMARKS
1	STIFFENING ANGLE	4 x 121 x 1355	1		RDSO/SPEC C-K201 X2CrNi12	5.224	

GROUP: 1-6 ROOF ASSEMBLY | SURFACE AREA IN Sq.m.:0.339 | WT/ASSY IN Kgs:5.224

STIFFENING ANGLE

SCALE 1:5	SSE/D	
	CHD	
ALT.	ALTD	
	DRN	K.Sriram

DATE OF LATEST ALT.	DATE OF FIRST ISSUE	AME/SME
	21-03-2013	

INDIAN RAILWAY STANDARDS

INTEGRAL COACH FACTORY, CHENNAI - 600038

SHEET 1 OF 1

AAA16921 A3

AAA16922

▽ ROUGH MACHINED	ROUGH CLEANED
▽▽ FINISH MACHINED	BURRS REMOVED
▽▽▽ FINE FINISH MACHINED	CHAMFERED

REVISIONS			
ALT.	ZONE	DESCRIPTION	APPROVED & DATE

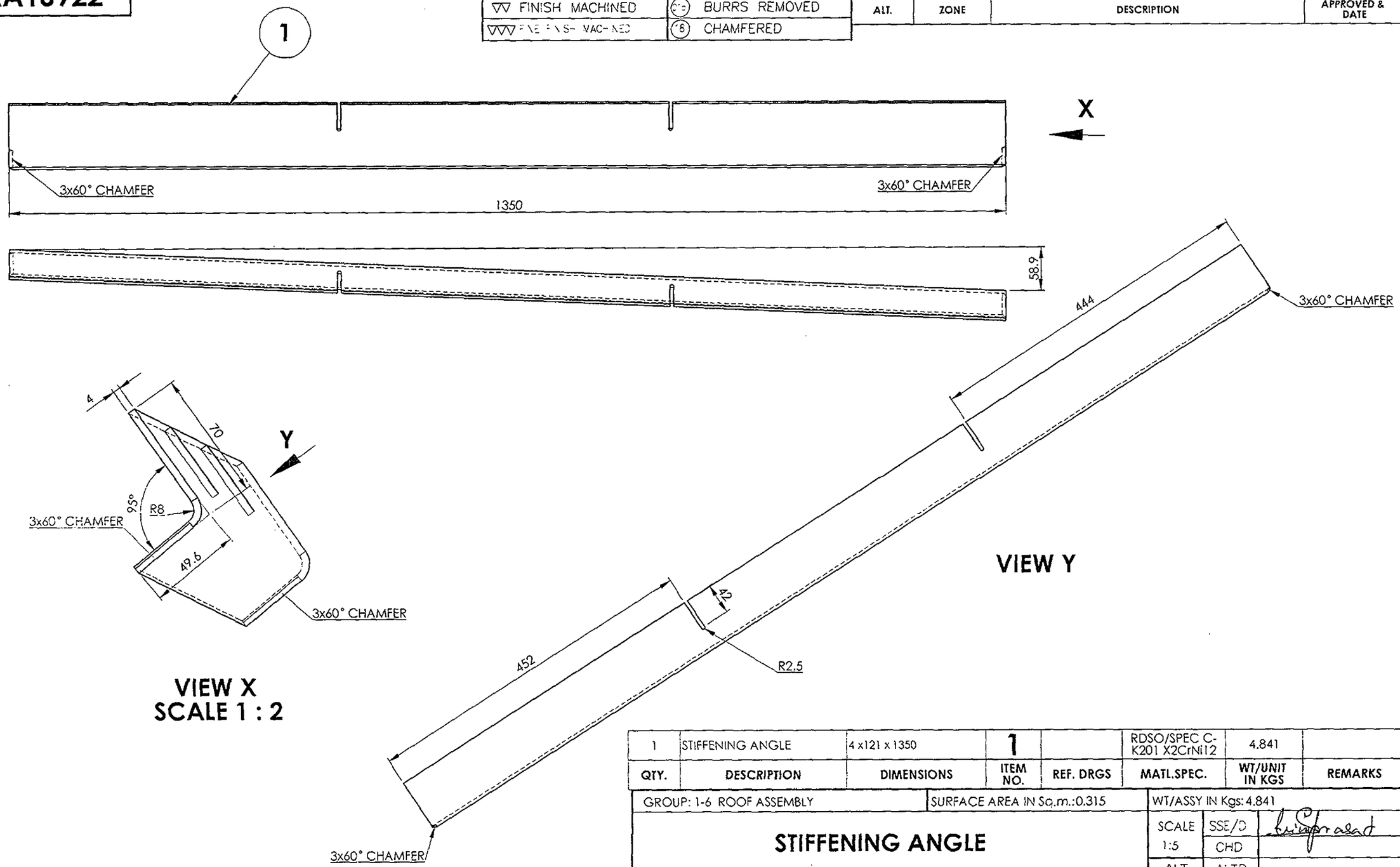

QTY.	DESCRIPTION	DIMENSIONS	ITEM NO.	REF. DRGS	MATL.SPEC.	WT/UNIT IN KGS	REMARKS
1	STIFFENING ANGLE	4 x121 x 1350	1		RDSO/SPEC C-K201 X2CrNi12	4.841	

GROUP: 1-6 ROOF ASSEMBLY | SURFACE AREA IN Sq.m.:0.315 | WT/ASSY IN Kgs: 4.841

STIFFENING ANGLE

SCALE 1:5	SSE/D	Srinivasa Prasad
	CHD	
ALT.	ALTD	
	DRN	K.Sriram

INDIAN RAILWAY STANDARDS

INTEGRAL COACH FACTORY, CHENNAI - 600038

SHEET 1 OF 1

AAA16922 A3

DATE OF LATEST ALT.	DATE OF FIRST ISSUE	AME/SME
	21-03-2013	2013

REF.DRG.NO.2 10113.0.20.200.111

ALL DIMENSIONS ARE IN mm UNLESS OTHERWISE SPECIFIED. FOR UNTOLERANCED DIMENSIONS AND ROUGHNESS VALUES, REFER DRAWING NO ICF/STD 9 0 001.
ANY MANUAL ALTERATION SHALL AUTOMATICALLY RENDER THIS DRAWING INVALID. WELDING SYMBOLS ARE AS PER IS: 813-1986.

AAA16923

▽ ROUGH MACHINED	ROUGH CLEANED
▽▽ FINISH MACHINED	BURRS REMOVED
▽▽▽ FINE FINISH MACHINED	CHAMFERED

REVISIONS			
ALT.	ZONE	DESCRIPTION	APPROVED & DATE

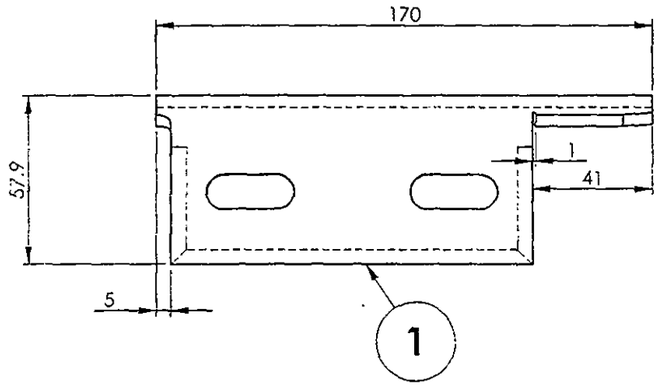

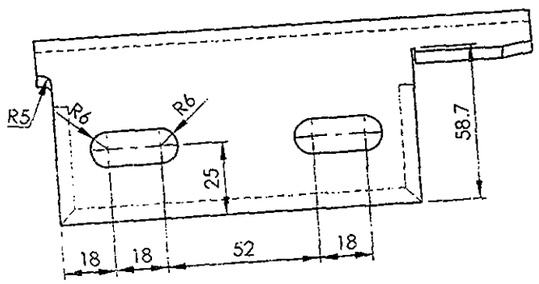

VIEW X

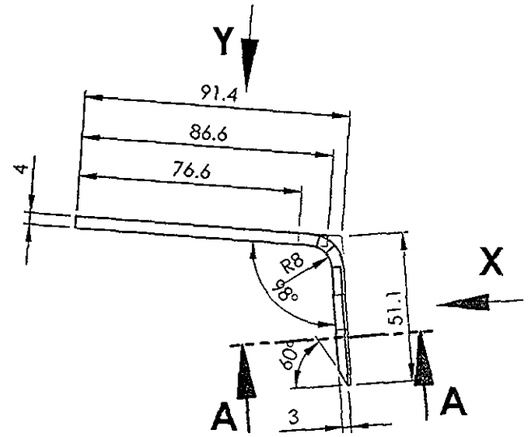

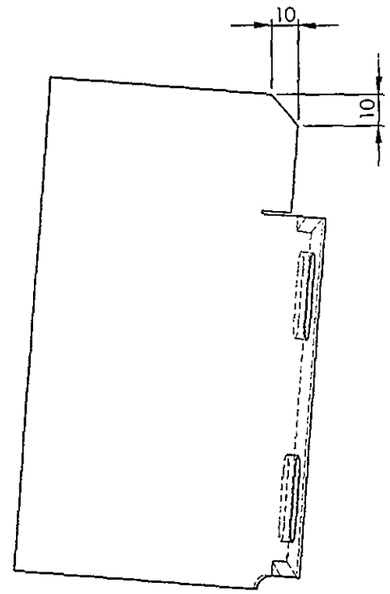

VIEW Y

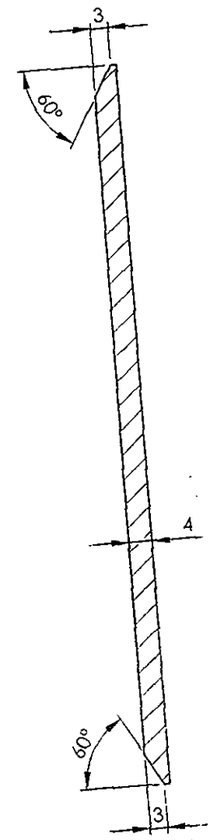

SECTION A-A
SCALE 1 : 1

ALL DIMENSIONS ARE IN mm UNLESS OTHERWISE SPECIFIED. FOR UNTOLERANCED DIMENSIONS AND ROUGHNESS VALUES, REFER DRAWING NO ICF/STD-9 0 001.
ANY MANUAL ALTERATION SHALL AUTOMATICALLY RENDER THIS DRAWING INVALID. WELDING SYMBOLS ARE AS PER IS: 813-1986.

REF.DRG.NO.3 10113.20.200.113

QTY.	DESCRIPTION	DIMENSIONS	ITEM NO.	REF. DRGS	MATL.SPEC.	WT/UNIT IN KGS	REMARKS
1	STIFFENING ANGLE	4 x 136 x 170	1		RDSO/SPEC C-K201 X2 Cr Ti 12	0.631	

GROUP: 1-6 ROOF ASSEMBLY | SURFACE AREA IN Sq.m.:0.043 | WT/ASSY IN Kgs:0.631

STIFFENING ANGLE

SCALE 1:2	SSE/D	
	CHD	
ALT.	ALTD	
	DRN	K.Sriram

INDIAN RAILWAY STANDARDS
INTEGRAL COACH FACTORY, CHENNAI - 600038

SHEET 1 OF 1

AAA16923 | A3

DATE OF LATEST ALT.	DATE OF FIRST ISSUE	AME/SME
	21-03-2013	

AAA16924

▽ ROUGH MACHINED	ROUGH CLEANED
▽▽ FINISH MACHINED	BURRS REMOVED
▽▽▽ FINE FINISH MACHINED	CHAMFERED

REVISIONS			
ALT.	ZONE	DESCRIPTION	APPROVED & DATE

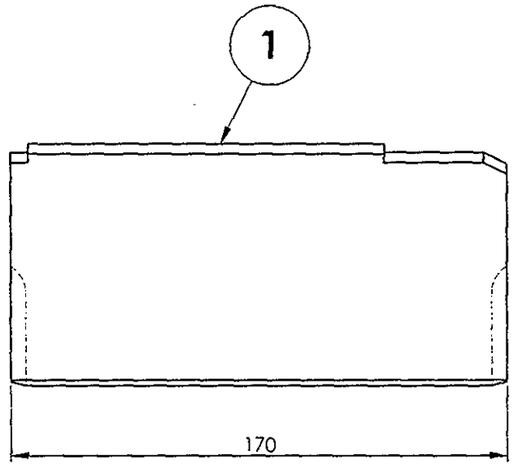

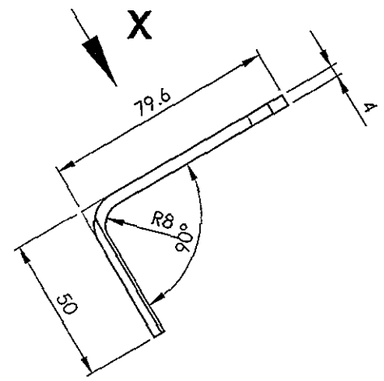

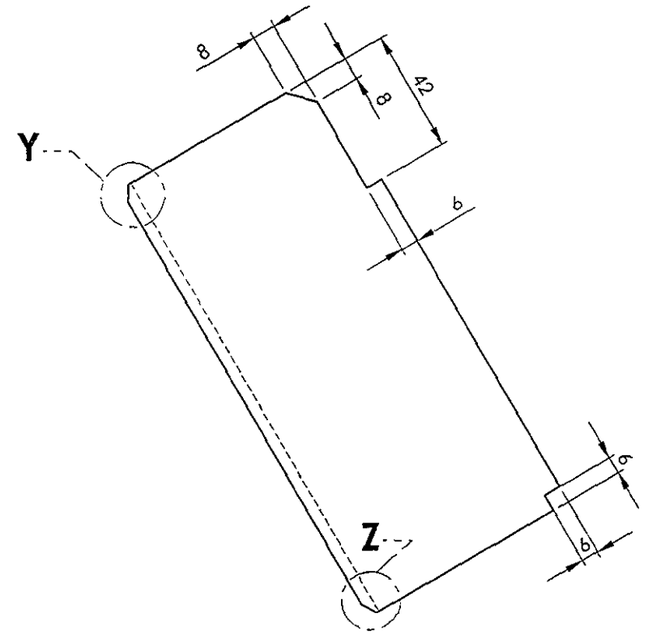

VIEW X

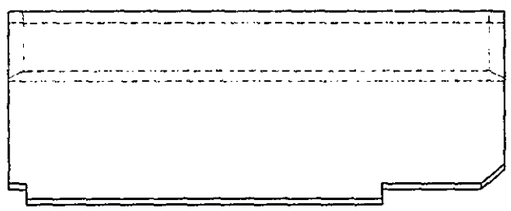

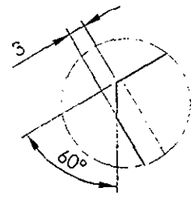

DETAIL Y
SCALE 1 : 1

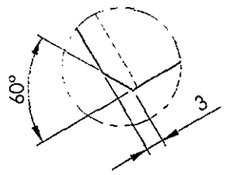

DETAIL Z
SCALE 1 : 1

ALL DIMENSIONS ARE IN mm UNLESS OTHERWISE SPECIFIED. FOR UNTOLERANCED DIMENSIONS AND ROUGHNESS VALUES, REFER DRAWING NO ICF/STD 9 0.001.
ANY MANUAL ALTERATION SHALL AUTOMATICALLY RENDER THIS DRAWING INVALID. WELDING SYMBOLS ARE AS PER IS: 813-1986.

REF.DRG.NO.3 10113.20.200.115

QTY.	DESCRIPTION	DIMENSIONS	ITEM NO.	REF. DRGS	MATL.SPEC.	WT/UNIT IN KGS	REMARKS
1	STIFFENING ANGLE	4 x 121 x 170	1		RDSO/SPEC C-K201 X2CrNi12	0.644	

GROUP: 1-6 ROOF ASSEMBLY | SURFACE AREA IN Sq.m.:0.043 | WT/ASSY IN Kgs:0.644

STIFFENING ANGLE

SCALE 1:2	SSE/D	
	CHD	
ALT.	ALTD	
	DRN	K.Sriram

INDIAN RAILWAY STANDARDS
INTEGRAL COACH FACTORY, CHENNAI - 600038

SHEET 1 OF 1

AAA16924 A3

DATE OF LATEST ALT.	DATE OF FIRST ISSUE	AME/SME
	21-03-2013	

AAA16926

▽ ROUGH MACHINED	(60) ROUGH CLEANED
▽▽ FINISH MACHINED	(61) BURRS REMOVED
▽▽▽ FINE FINISH MACHINED	(18) CHAMFERED

REVISIONS			
ALT.	ZONE	DESCRIPTION	APPROVED & DATE

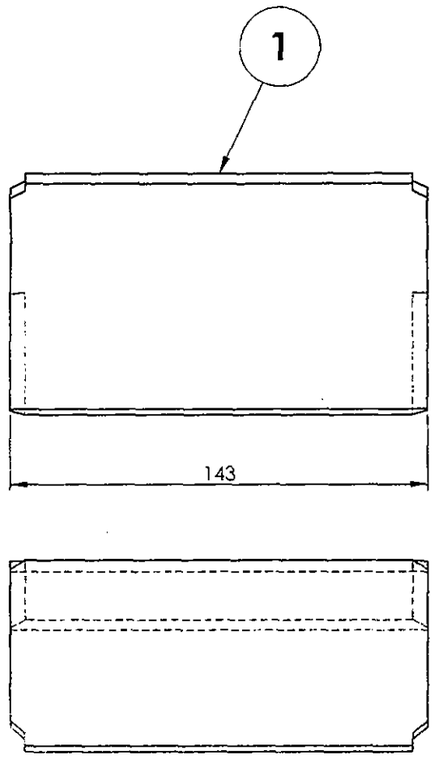

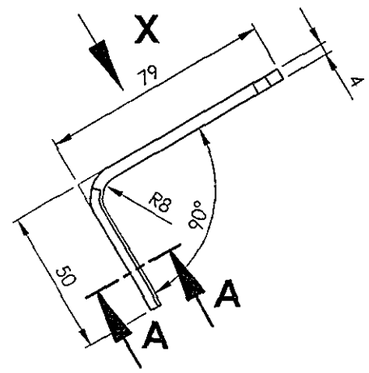

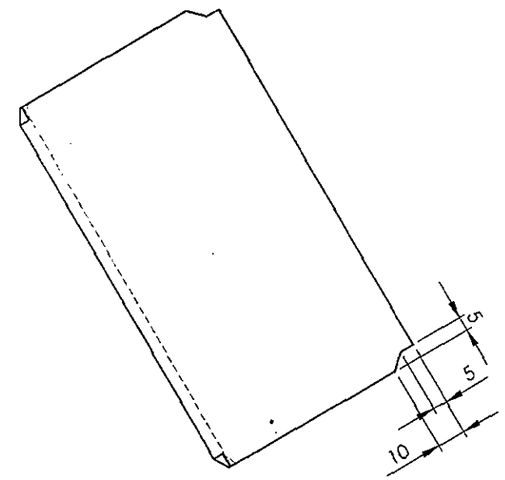

VIEW X

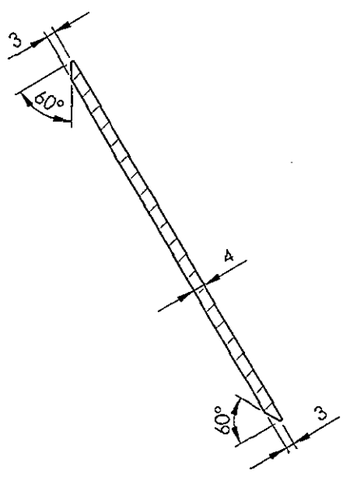

SECTION A-A

ALL DIMENSIONS ARE IN mm UNLESS OTHERWISE SPECIFIED. FOR UNTOLERANCED DIMENSIONS AND ROUGHNESS VALUES, REFER DRAWING NO ICF/SID 9 0 001.
ANY MANUAL ALTERATION SHALL AUTOMATICALLY RENDER THIS DRAWING INVALID. WELDING SYMBOLS ARE AS PER IS: 813-1986.

REF.DRG.NO.3 10113.0.20.200.123

QTY.	DESCRIPTION	DIMENSIONS	ITEM NO.	REF. DRGS	MATL.SPEC.	WT/UNIT IN KGS	REMARKS
1	STIFFENING ANGLE	4 x 121 x 143	1		RDSO/SPEC C-K201 X2CrNi12	0.544	

GROUP: 1-6 ROOF ASSEMBLY | SURFACE AREA IN Sq.m.:0.036 | WT/ASSY IN Kgs:0.544

STIFFENING ANGLE

SCALE 1:2	SSE/D	
	CHD	
ALT.	ALTD	
	DRN	K.Sriram

DATE OF LATEST ALT.	DATE OF FIRST ISSUE	AME/SME
	21-03-2013	

INDIAN RAILWAY STANDARDS

INTEGRAL COACH FACTORY, CHENNAI - 600038

SHEET 1 OF 1

AAA16926 A3

AAA16927

▽ ROUGH MACHINED	ROUGH CLEANED
▽▽ FINISH MACHINED	BURRS REMOVED
▽▽▽ FINE FINISH MACHINED	CHAMFERED

REVISIONS			
ALT.	ZONE	DESCRIPTION	APPROVED & DATE

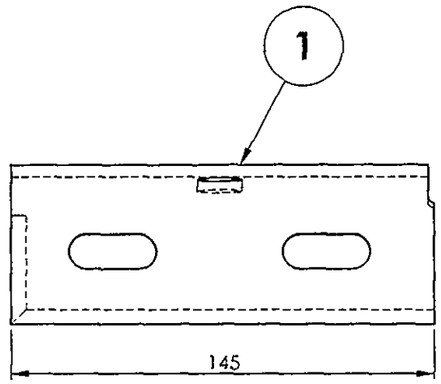

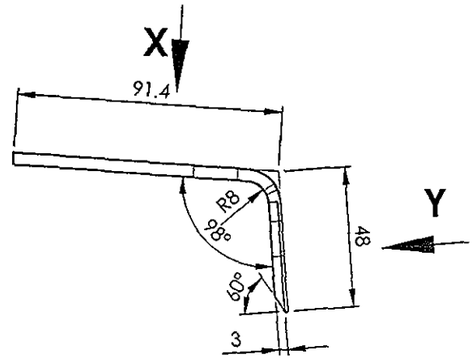

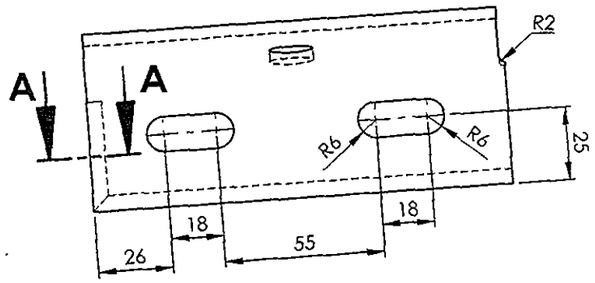

VIEW Y

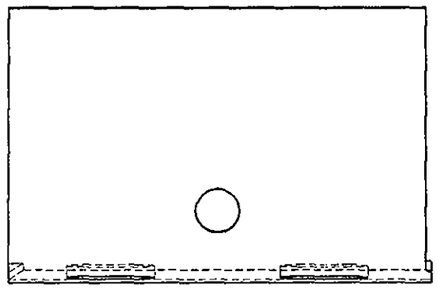

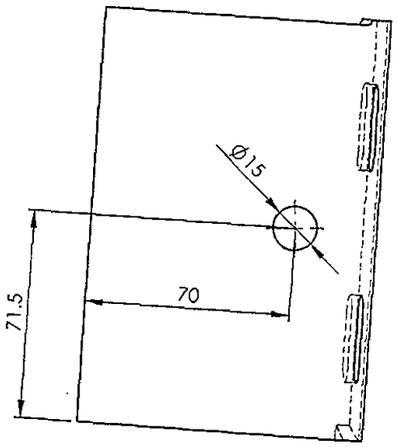

VIEW X

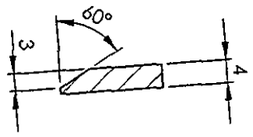

SECTION A-A
SCALE 1 : 1

ALL DIMENSIONS ARE IN mm UNLESS OTHERWISE SPECIFIED. FOR UNTOLERANCED DIMENSIONS AND ROUGHNESS VALUES, REFER DRAWING NO ICF/STD-9-0-001.
ANY MANUAL ALTERATION SHALL AUTOMATICALLY RENDER THIS DRAWING INVALID. WELDING SYMBOLS ARE AS PER IS: 813-1986.

REF.DRG.NO.3 10113.0.20.200.125

QTY.	DESCRIPTION	DIMENSIONS	ITEM NO.	REF. DRGS	MATL.SPEC.	WT/UNIT IN KGS	REMARKS
1	STIFFENING ANGLE	4 x 135 x 145	1		RDSO/SPEC C-K201 X2CrNi12	0.573	

GROUP: 1-6 ROOF ASSEMBLY | SURFACE AREA IN Sq.m.:0.039 | WT/ASSY IN Kgs:0.573

STIFFENING ANGLE

SCALE 1:2	SSE/D	
	CHD	
ALT.	ALTD	
	DRN	K.Sriram

DATE OF LATEST ALT.	DATE OF FIRST ISSUE	AME/SME
	21-03-2013	

INDIAN RAILWAY STANDARDS
INTEGRAL COACH FACTORY, CHENNAI - 600038

SHEET 1 OF 1

AAA16927 A3

AAA16929

▽ ROUGH MACHINED	ROUGH CLEANED
▽▽ FINISH MACHINED	BURRS REMOVED
▽▽▽ FINE FINISH MACHINED	CHAMFERED

REVISIONS			
ALT.	ZONE	DESCRIPTION	APPROVED & DATE

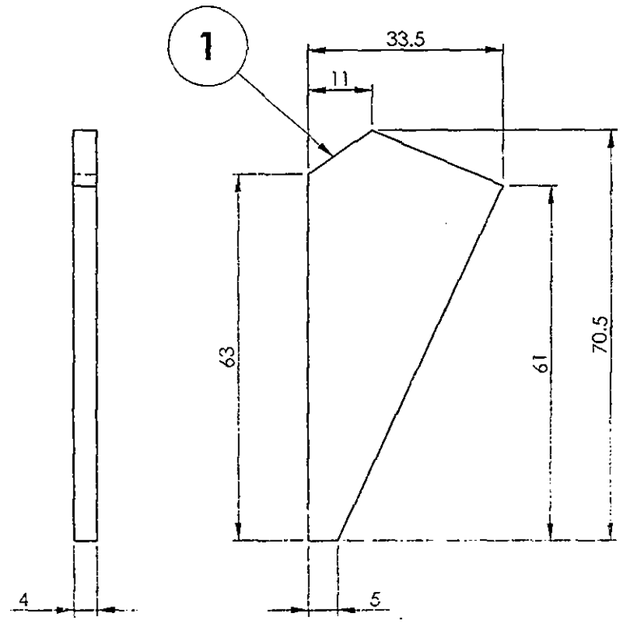

ALL DIMENSIONS ARE IN mm UNLESS OTHERWISE SPECIFIED. FOR UNTOLERANCED DIMENSIONS AND ROUGHNESS VALUES, REFER DRAWING NO ICF/STD 9.0.001.
ANY MANUAL ALTERATION SHALL AUTOMATICALLY RENDER THIS DRAWING INVALID. WELDING SYMBOLS ARE AS PER IS: 813-1986.

REF.DRG.NO.4 10113.0.20.200.138

QTY.	DESCRIPTION	DIMENSIONS	ITEM NO.	REF. DRGS	MATL.SPEC.	WT/UNIT IN KGS	REMARKS
1	RIB	4 x 33.5 x 70.5	1		RDSO/SPEC C-K201 X2 Cr Ni 12	0.043	

GROUP: 1-6 ROOF ASSEMBLY | SURFACE AREA IN Sq.m.:0.003 | WT/ASSY IN Kgs:0.043

RIB

SCALE 1:1	SSE/D	
	CHD	
ALT.	ALTD	
	DRN	K.Sriram

DATE OF LATEST ALT.	DATE OF FIRST ISSUE	AME/SME
	21-03-2013	

INDIAN RAILWAY STANDARDS

INTEGRAL COACH FACTORY, CHENNAI - 600038

SHEET 1 OF 1

AAA16929 A3

AAA16932

▽ ROUGH MACHINED	(01) ROUGH CLEANED
▽▽ FINISH MACHINED	(01B) BURRS REMOVED
▽▽▽ FINE FINISH MACHINED	(18) CHAMFERED

REVISIONS

ALT.	ZONE	DESCRIPTION	APPROVED & DATE

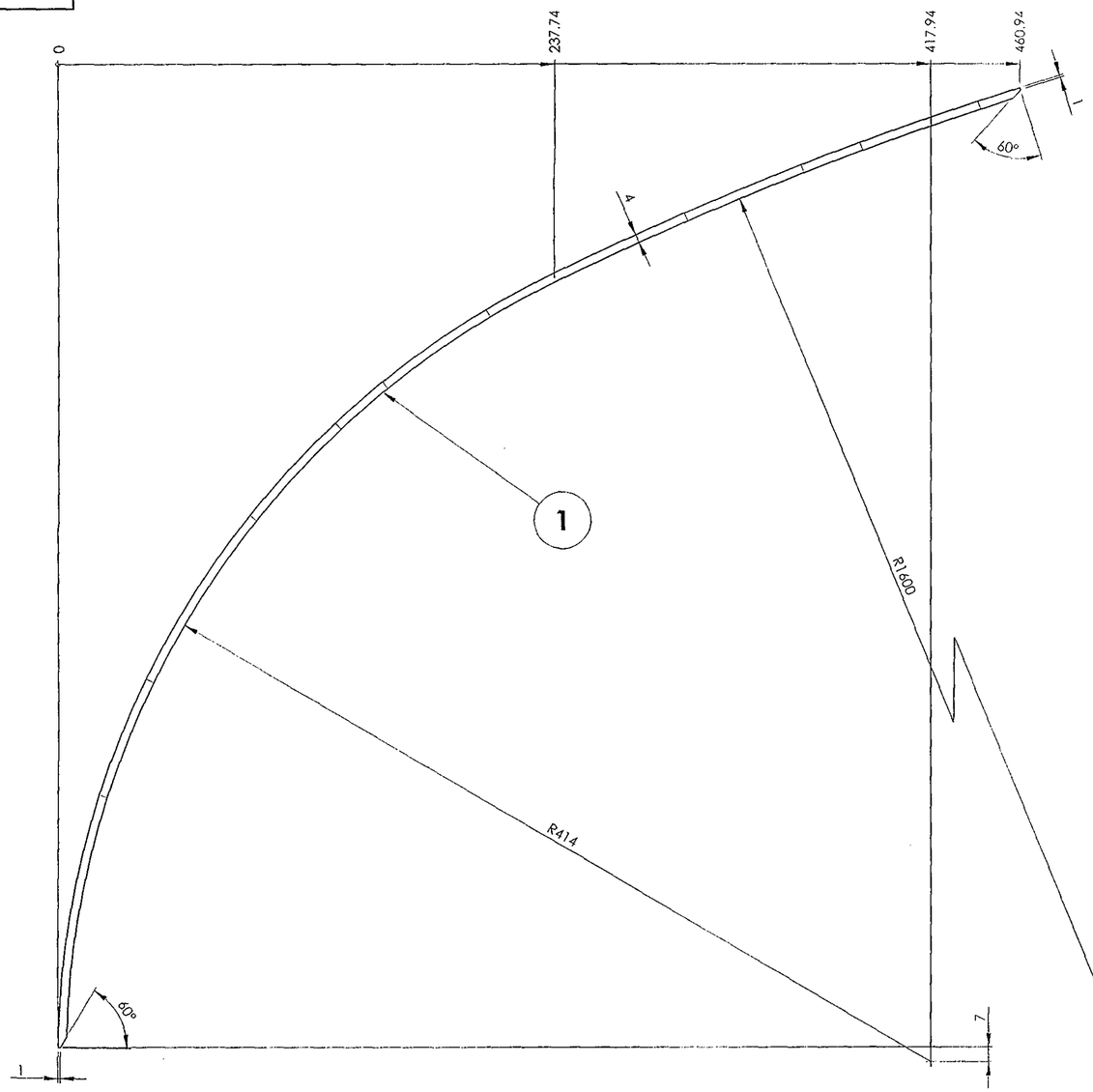

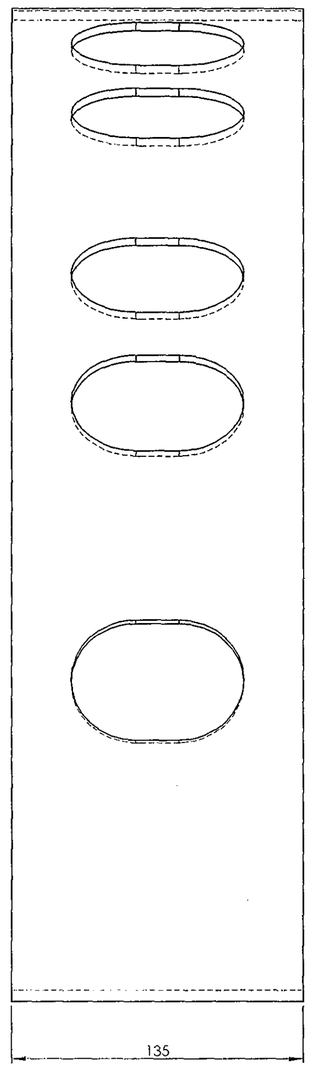

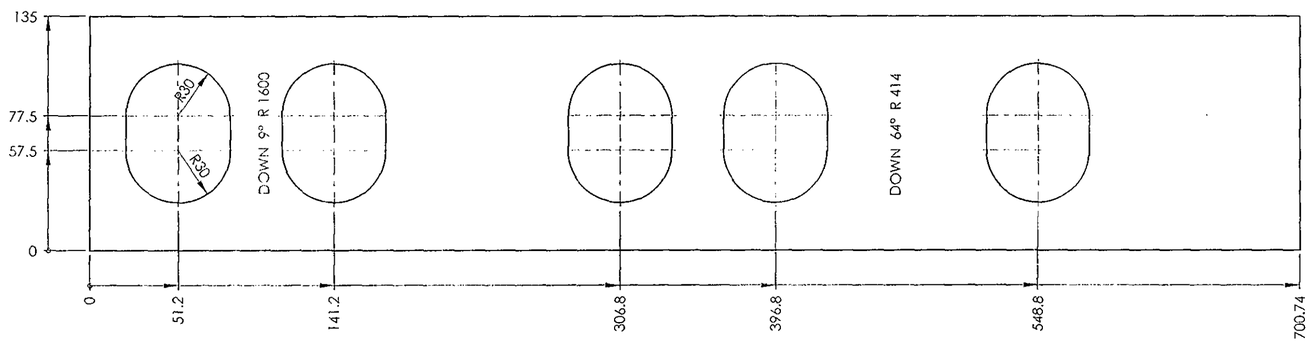

DEVELOPMENT VIEW

QTY.	DESCRIPTION	DIMENSIONS	ITEM NO.	REF. DRGS	MATL.SPEC.	WT/UNIT IN KGS	REMARKS
1	FLANGE	4 x 135 x 701	1		RDSO/SPEC C-101 X2CrNi12	2.367	

GROUP: 1-6 ROOF ASSEMBLY | SURFACE AREA IN Sq.m.: 0.160 | WT/ASSY IN Kgs: 2.367

FLANGE

SCALE 1:2 | SSE/D | CHD | ALT | ALTD | DRN: K.Sriram

INDIAN RAILWAY STANDARDS

INTEGRAL COACH FACTORY, CHENNAI - 600038

SHEET 1 OF 1

AAA16932 A2

DATE OF LATEST ALT.	DATE OF FIRST ISSUE	AME/SME
	21-03-2013	

REF.DRG.NO.3 10113.0.20.210.117

ALL DIMENSIONS ARE IN mm UNLESS OTHERWISE SPECIFIED. FOR UNTOLERANCED DIMENSIONS AND ROUGHNESS VALUES, REFER DRAWING NO ICF/STD-9-0-001.
ANY MANUAL ALTERATION SHALL BE TOTALLY RENDER THIS DRAWING INVALID. WELDING SYMBOLS ARE AS PER IS:813-1986.

AAA16933

▽ ROUGH MACHINED	ROUGH CLEANED
▽▽ FINISH MACHINED	BURRS REMOVED
▽▽▽ FINE FINISH MACHINED	CHAMFERED

REVISIONS			
ALT.	ZONE	DESCRIPTION	APPROVED & DATE

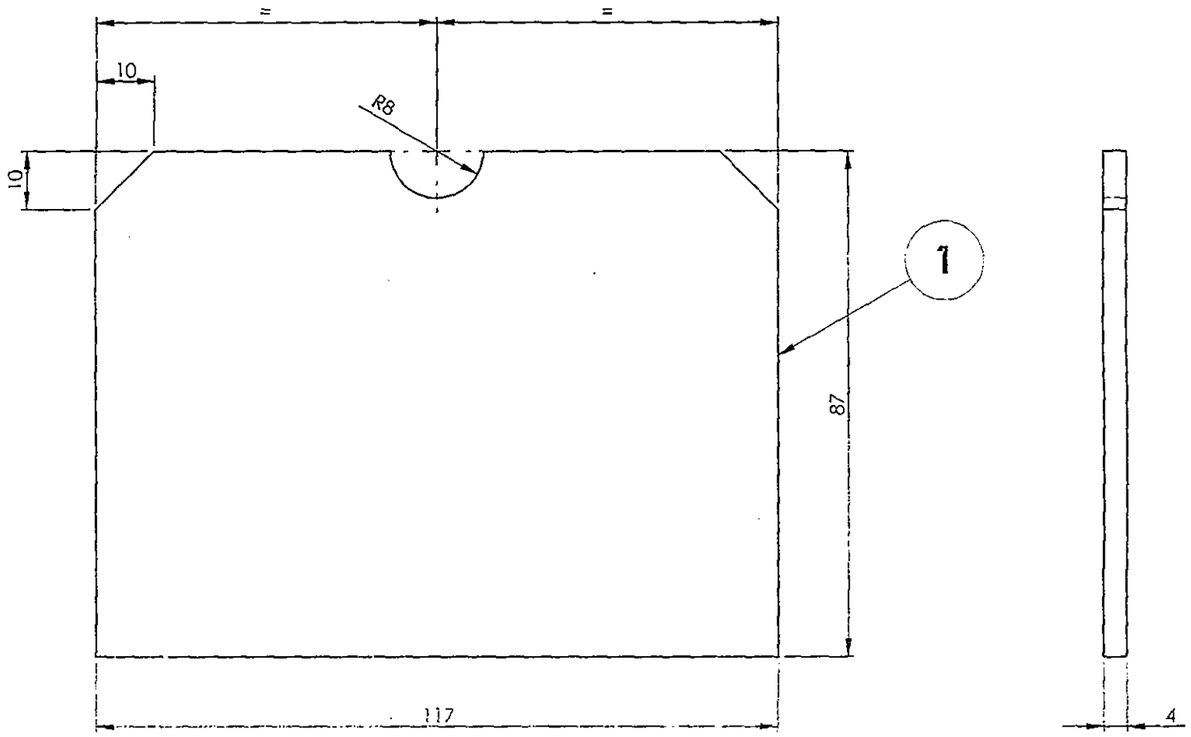

ALL DIMENSIONS ARE IN mm UNLESS OTHERWISE SPECIFIED. FOR UNTOLERANCED DIMENSIONS AND ROUGHNESS VALUES, REFER DRAWING NO ICF/STD 9 0.001.
ANY MANUAL ALTERATION SHALL AUTOMATICALLY RENDER THIS DRAWING INVALID. WELDING SYMBOLS ARE AS PER IS: 813-1986.

QTY.	DESCRIPTION	DIMENSIONS	ITEM NO.	REF. DRGS	MATL.SPEC.	WT/UNIT IN KGS	REMARKS
1	WEB	4 x 87 x 117	1		RDSO/SPEC C-K201 X2CrNi12	0.319	

GROUP: 1-6 ROOF ASSEMBLY | SURFACE AREA IN Sq.m.:0.022 | WT/ASSY IN Kgs:0.319

WEB

SCALE 1:1	SSE/D	
	CHD	
ALT.	ALTD	
	DRN	K.Sriram

INDIAN RAILWAY STANDARDS

INTEGRAL COACH FACTORY, CHENNAI - 600038

SHEET 1 OF 1

AAA16933 A3

DATE OF LATEST ALT.	DATE OF FIRST ISSUE	AME/SME
	21-03-2013	

REF.DRG.NO.3 10113.0.20.200.122

AAA16934

▽ ROUGH MACHINED	(C) ROUGH CLEANED
▽▽ FINISH MACHINED	(D) BURRS REMOVED
▽▽▽ FINE FINISH MACHINED	(B) CHAMFERED

REVISIONS			
ALT.	ZONE	DESCRIPTION	APPROVED & DATE

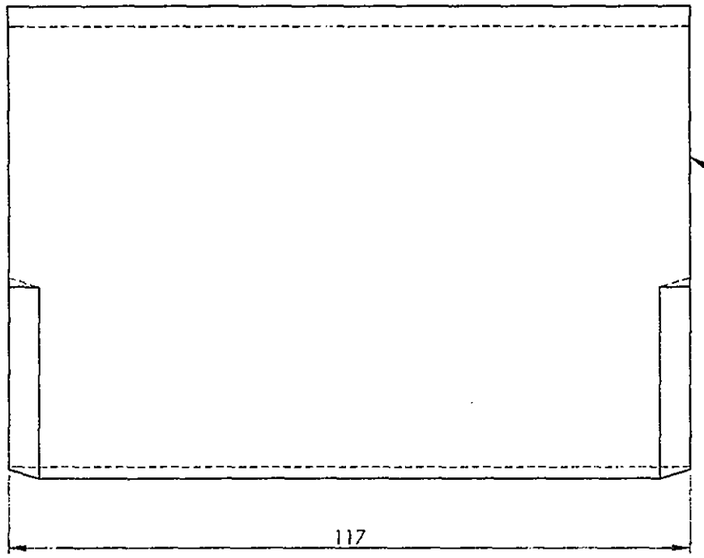

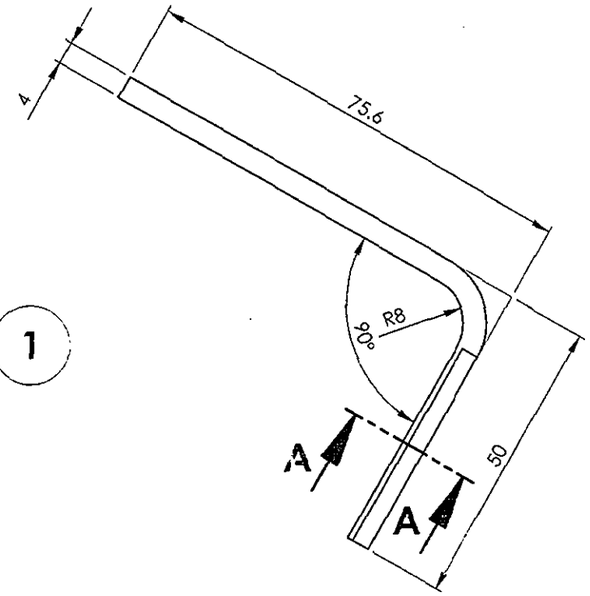

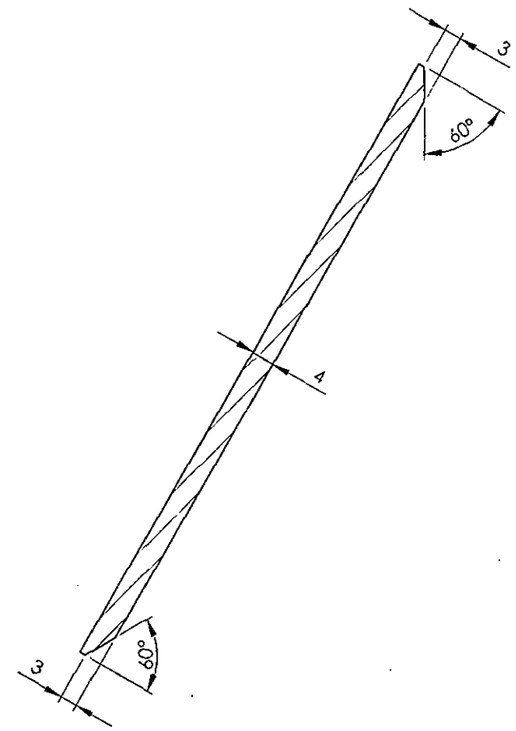

SECTION A-A

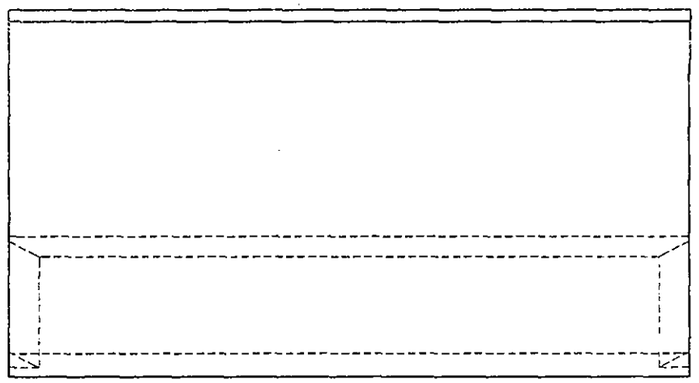

QTY.	DESCRIPTION	DIMENSIONS	ITEM NO.	REF. DRGS	MATL.SPEC.	WT/UNIT IN KGS	REMARKS
1	STIFFENING ANGLE	4 x 117 x 118	1		RDSO/SPEC C-K201 X2CrNi12	0.434	

GROUP: 1-6 ROOF ASSEMBLY | SURFACE AREA IN Sq.m.:0.029 | WT/ASSY IN Kgs:0.434

STIFFENING ANGLE

SCALE	SSE/D	Murthy Prasad
1:1	CHD	
ALT.	ALTD	
	DRN	K.Sriram

INDIAN RAILWAY STANDARDS

INTEGRAL COACH FACTORY, CHENNAI - 600038

SHEET 1 OF 1

AAA16934 A3

DATE OF LATEST ALT.	DATE OF FIRST ISSUE	AME/SME
	21-03-2013	

REF.DRG.NO.3 10113.0.20.200.124

ALL DIMENSIONS ARE IN mm UNLESS OTHERWISE SPECIFIED. FOR UNTOLERANCED DIMENSIONS AND ROUGHNESS VALUES, REFER DRAWING NO ICF/SID-9-0-001.

ANY MANUAL ALTERATION SHALL AUTOMATICALLY RENDER THIS DRAWING INVALID. WELDING SYMBOLS ARE AS PER IS:813-1986.

AAA16935

▽ ROUGH MACHINED	(01) ROUGH CLEANED		
▽▽ FINISH MACHINED	(510) BURRS REMOVED		
▽▽▽ FINE FINISH MACHINED	(18) CHAMFERED		

REVISIONS			
ALT.	ZONE	DESCRIPTION	APPROVED & DATE

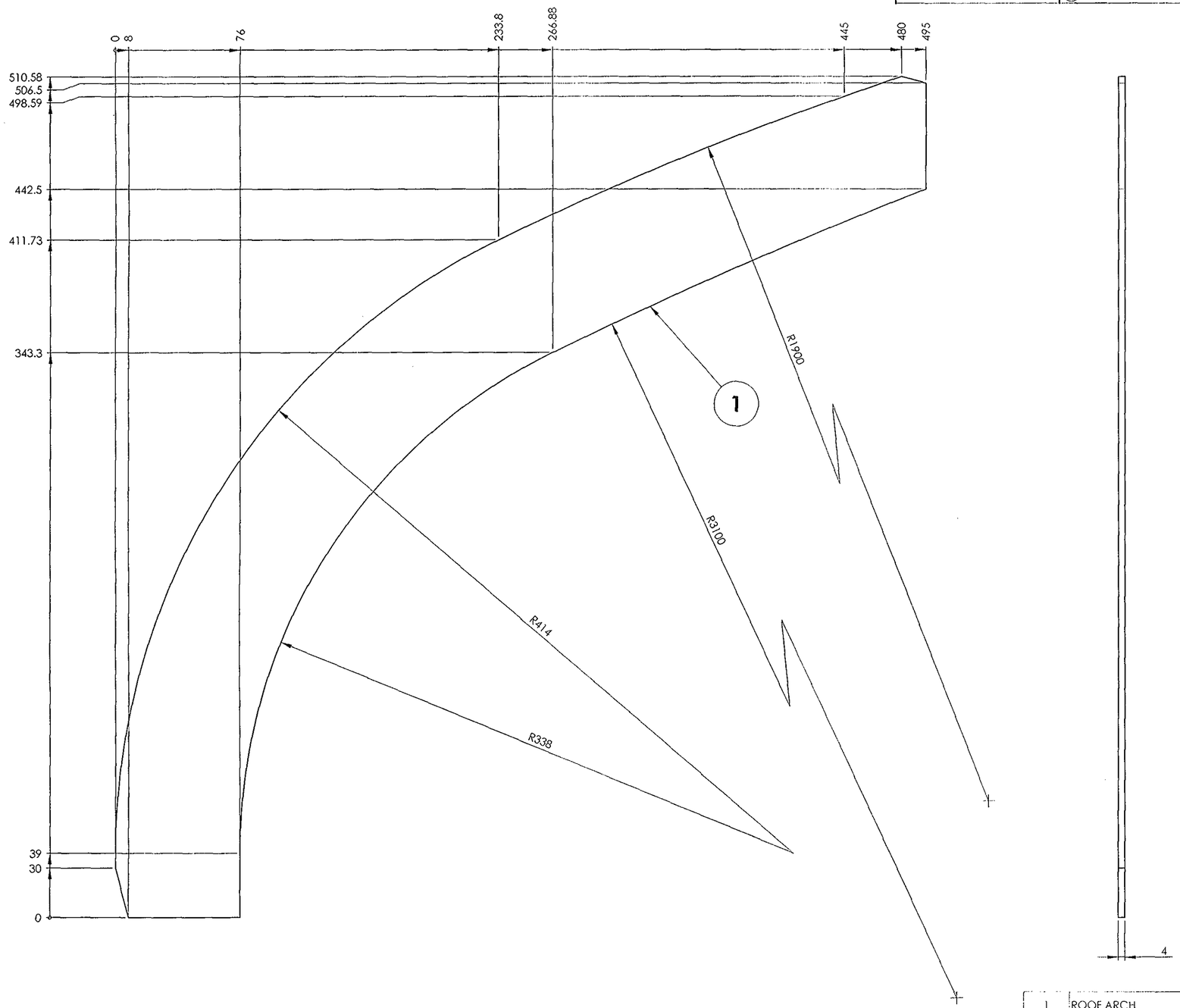

ALL DIMENSIONS ARE IN mm UNLESS OTHERWISE SPECIFIED. FOR UNTOLERANCED DIMENSIONS AND ROUGHNESS VALUES, REFER DRAWING NO ICF/STD-9-0-001.
ANY MANUAL ALTERATION SHALL AUTOMATICALLY RENDER THIS DRAWING INVALID. WELDING SYMBOLS ARE AS PER IS:813-1986.

QTY.	DESCRIPTION	DIMENSIONS	ITEM NO.	REF. DRGS	MATL.SPEC.	WT/UNIT IN KGS	REMARKS
1	ROOF ARCH	4 x 495 x 511	1		RDSO/SPEC C-K201 X2CrNi12	1.737	

GROUP: 1-6 ROOF ASSEMBLY | SURFACE AREA IN Sq.m.: 0.115 | WT/ASSY IN Kgs: 1.737

ROOF ARCH

SCALE 1:2	SSE/D	Lin Prasad
	CHD	
ALT	ALTD	
	DRN	K.Sriram

INDIAN RAILWAY STANDARDS
INTEGRAL COACH FACTORY, CHENNAI - 600038

SHEET 1 OF 1

AAA16935 A2

DATE OF LATEST ALT.	DATE OF FIRST ISSUE	AME/SME
	21-03-2013	

REF.DRG.NO.2 10113.0.20.210.104

AAA16936

▽ ROUGH MACHINED	(01) ROUGH CLEANED		
▽▽ FINISH MACHINED	(01b) BURRS REMOVED		
▽▽▽ FINE FINISH MACHINED	(18) CHAMFERED		

REVISIONS			
ALT.	ZONE	DESCRIPTION	APPROVED & DATE

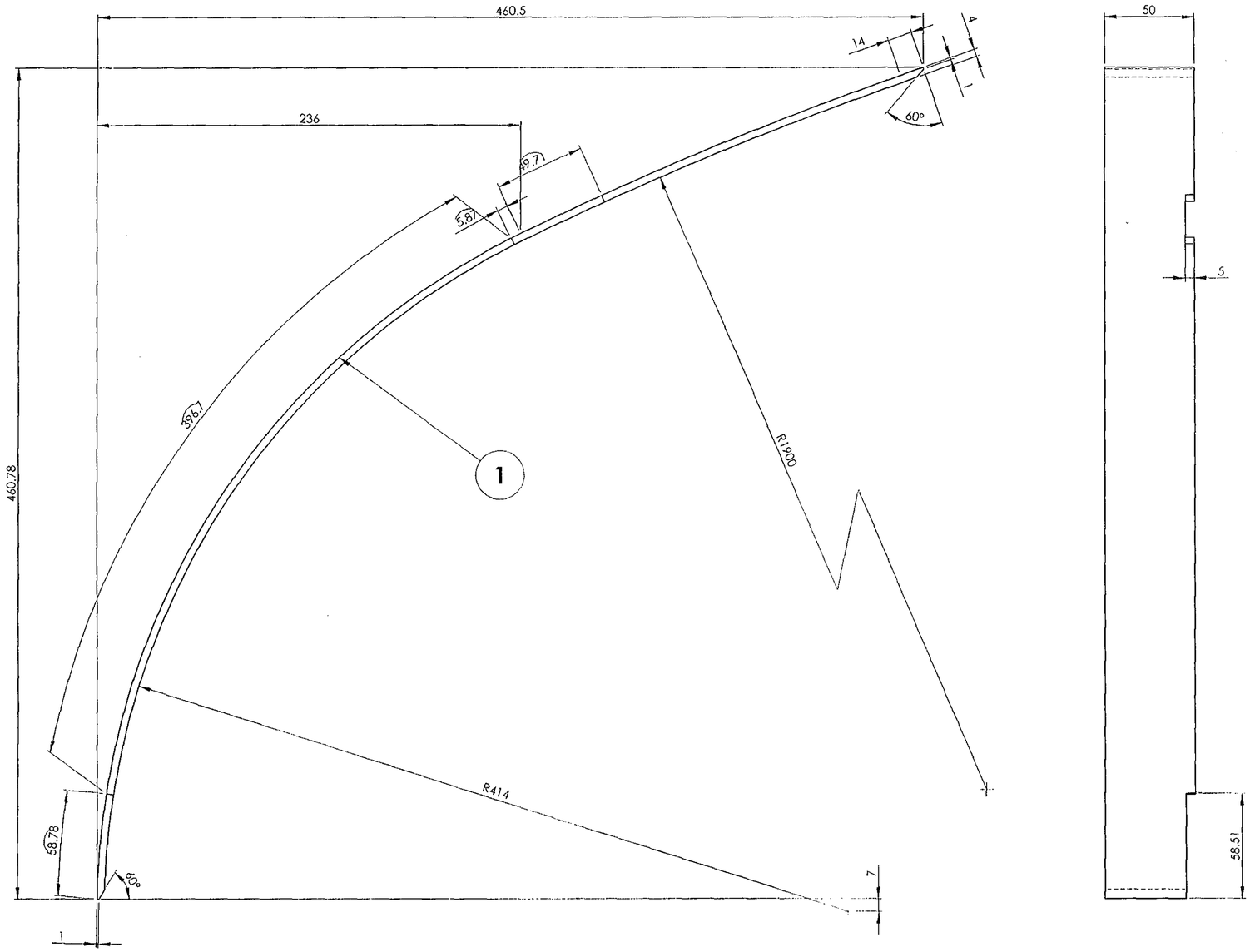

ALL DIMENSIONS ARE IN mm UNLESS OTHERWISE SPECIFIED. FOR UNTOLERANCED DIMENSIONS AND ROUGHNESS VALUES, REFER DRAWING NO ICF/STD-9-0-001.
ANY MANUAL ALTERATION SHALL AUTOMATICALLY RENDER THIS DRAWING INVALID. WELDING SYMBOLS ARE AS PER IS:813-1986.

QTY.	DESCRIPTION	DIMENSIONS	ITEM NO.	REF. DRGS	MATL.SPEC.	WT/UNIT IN KGS	REMARKS
1	FLANGE	4 x 50 x 702	1		RDSO/SPEC C-K201 X2CrNi12	1.098	

GROUP: 1-6 ROOF ASSEMBLY | SURFACE AREA IN Sq.m.: 0.075 | WT/ASSY IN Kgs: 1.098

FLANGE

SCALE 1:2	SSE/D	Vidyaprasad
	CHD	
ALT	ALTD	
	DRN	K.Sriram

INDIAN RAILWAY STANDARDS
INTEGRAL COACH FACTORY, CHENNAI - 600038

SHEET 1 OF 1

AAA16936 **A2**

DATE OF LATEST ALT.	DATE OF FIRST ISSUE	AME/SME
	21-03-2013	

REF.DRG.NO.3 10113.0.20.210.119

AAA16937

▽ ROUGH MACHINED	(D1) ROUGH CLEANED		
▽▽ FINISH MACHINED	(D1b) BURRS REMOVED		
▽▽▽ FINE FINISH MACHINED	(18) CHAMFERED		

REVISIONS				
ALT.	ZONE		DESCRIPTION	APPROVED & DATE

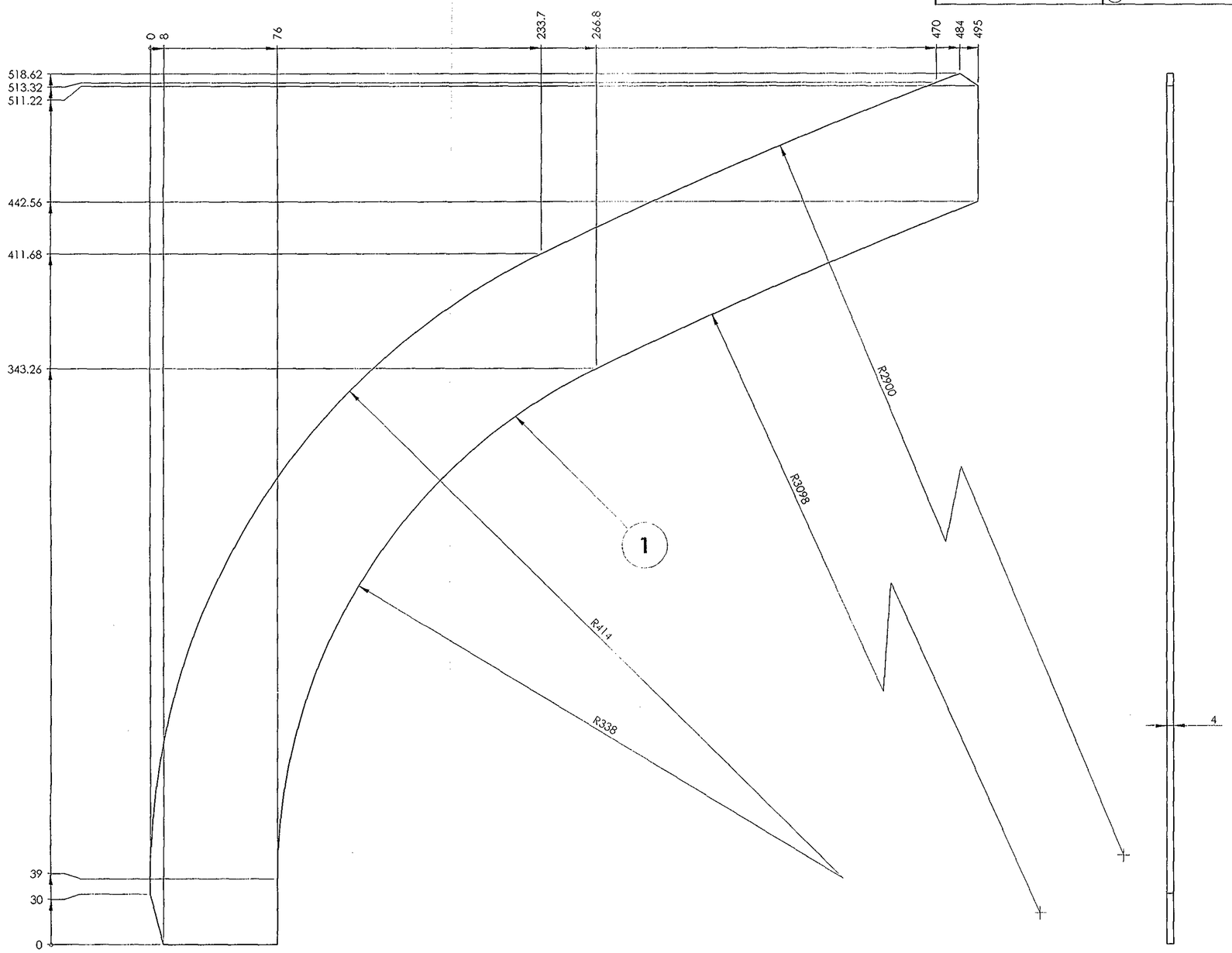

ALL DIMENSIONS ARE IN mm UNLESS OTHERWISE SPECIFIED. FOR UNTOLERANCED DIMENSIONS AND ROUGHNESS VALUES, REFER DRAWING NO ICF/STD-9-0-001.
ANY MANUAL ALTERATION SHALL AUTOMATICALLY RENDER THIS DRAWING INVALID. WELDING SYMBOLS ARE AS PER SS 13-1986.

QTY.	DESCRIPTION	DIMENSIONS	ITEM NO.	REF. DRGS	MATL.SPEC.	WT/UNIT IN KGS	REMARKS
1	ROOF ARCH	4 x 495 x 519	1		RDSO/SPEC C-K201 X2CrNi12	1.758	

GROUP: 1-6 ROOF ASSEMBLY | SURFACE AREA IN Sq.m.: 0.116 | WT/ASSY IN Kgs: 1.758

ROOF ARCH

SCALE 1:2 | SSE/D | CHD | ALT | ALTD | DRN: K.Sriram

INDIAN RAILWAY STANDARDS
INTEGRAL COACH FACTORY, CHENNAI - 600038

SHEET 1 OF 1

AAA16937 A2

DATE OF LATEST ALT.	DATE OF FIRST ISSUE	AME/SME
	21-03-2012	

REF.DRG.NO.2 10113.0.20.210.105

AAA16938

▽ ROUGH MACHINED	(01) ROUGH CLEANED		
▽▽ FINISH MACHINED	(HB) BURRS REMOVED		
▽▽▽ FINE FINISH MACHINED	(18) CHAMFERED		

REVISIONS

ALT.	ZONE	DESCRIPTION	APPROVED & DATE

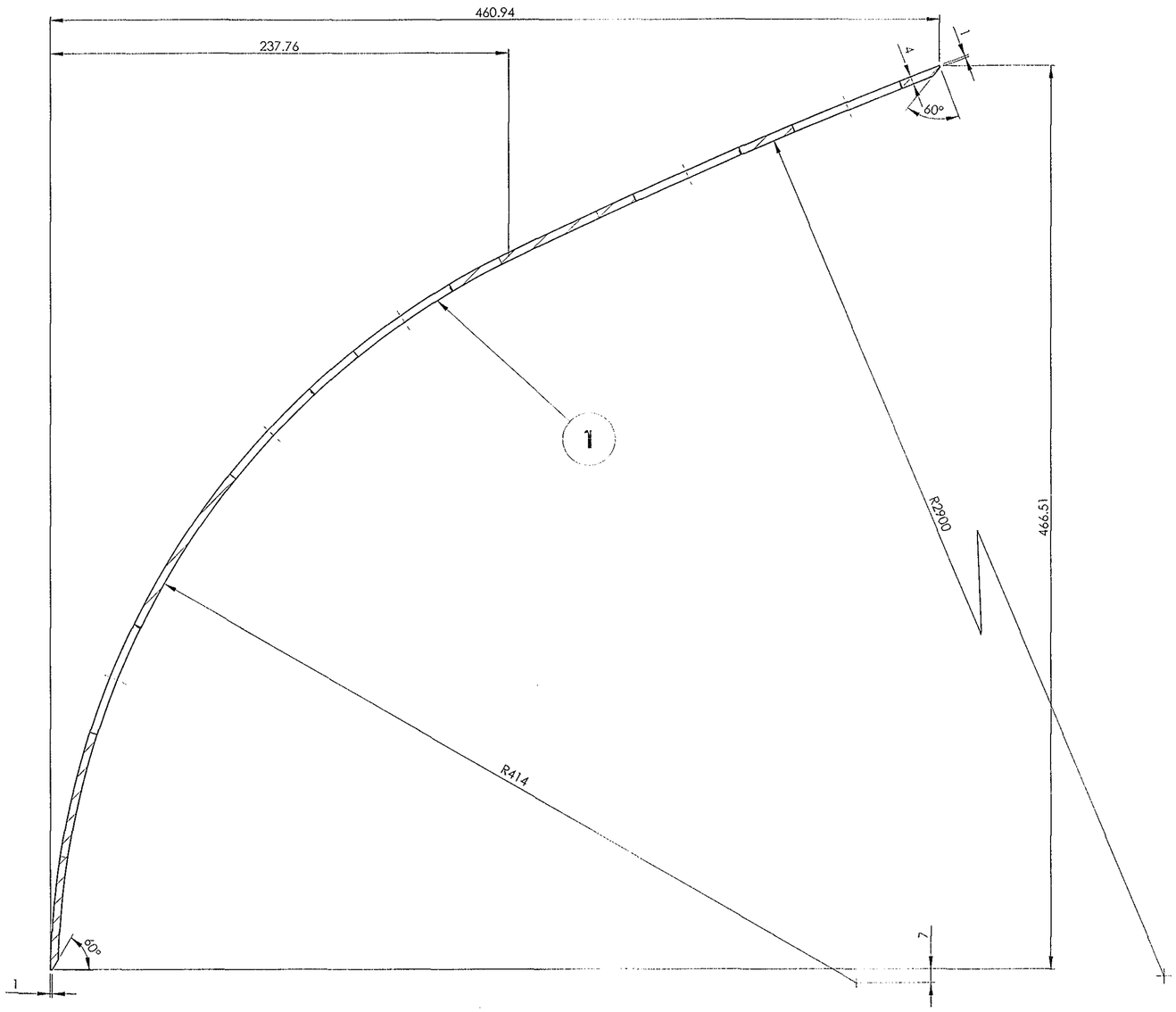

SECTION A-A

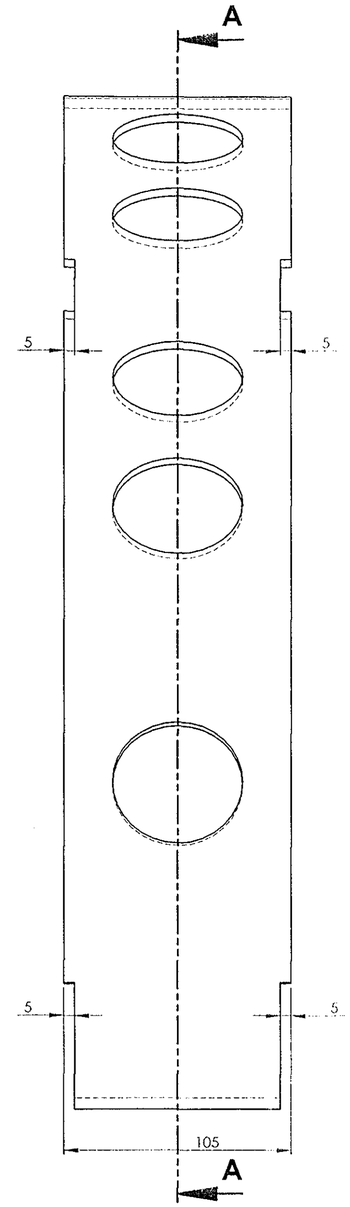

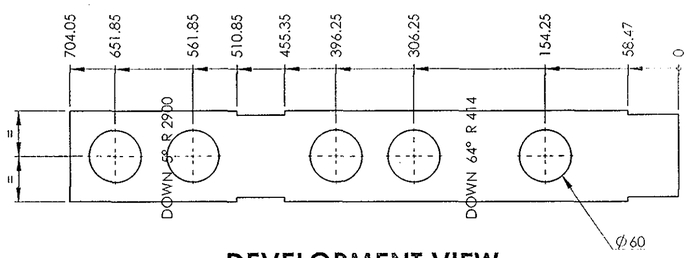

DEVELOPMENT VIEW

ALL DIMENSIONS ARE IN mm UNLESS OTHERWISE SPECIFIED. FOR UNTOLERANCED DIMENSIONS AND ROUGHNESS VALUES, REFER DRAWING NO. ICF/STD-9-0-001.
ANY MANUAL ALTERATION SHALL AUTOMATICALLY RENDER THIS DRAWING INVALID. WELDING SYMBOLS ARE AS PER IS813-1986.

QTY.	DESCRIPTION	DIMENSIONS	ITEM NO.	REF. DRGS	MATL.SPEC.	WT/UNIT IN KGS	REMARKS
1	FLANGE	4 x 105 x 705	1		RDSO/SPEC C-K201 X2CrNi12	1.864	

GROUP: 1-6 ROOF ASSEMBLY | SURFACE AREA IN Sq.m.: 0.127 | WT/ASSY IN Kgs: 1.864

FLANGE

SCALE 1:2	SSE/D	Murthy Prasad
	CHD	
ALT	ALTD	
	DRN	K.Sriram

INDIAN RAILWAY STANDARDS
INTEGRAL COACH FACTORY, CHENNAI - 600038

SHEET 1 OF 1

AAA16938 A2

DATE OF LATEST ALT.	DATE OF FIRST ISSUE	AME/SME
	21-03-2013	

REF.DRG.NO.3 10113.0.20.210.121

AAA16939

▽ ROUGH MACHINED	ROUGH CLEANED
▽▽ FINISH MACHINED	BURRS REMOVED
▽▽▽ FINE FINISH MACHINED	CHAMFERED

REVISIONS			
ALT.	ZONE	DESCRIPTION	APPROVED & DATE

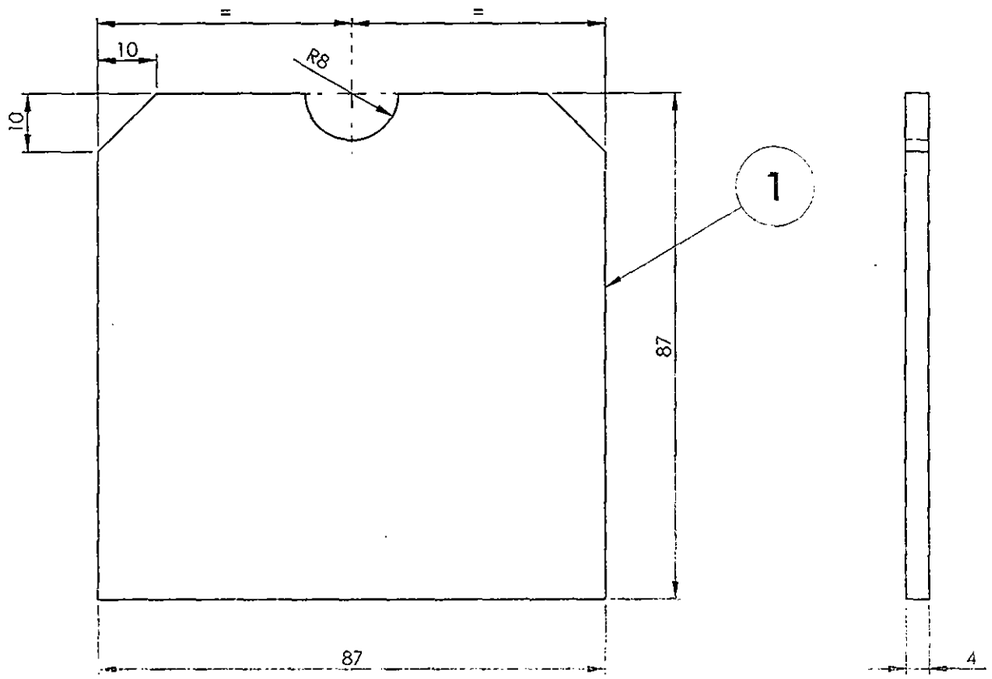

ALL DIMENSIONS ARE IN mm UNLESS OTHERWISE SPECIFIED. FOR UNTOLERANCED DIMENSIONS AND ROUGHNESS VALUES, REFER DRAWING NO ICF/STD 9 0 001.
ANY MANUAL ALTERATION SHALL AUTOMATICALLY RENDER THIS DRAWING INVALID. WELDING SYMBOLS ARE AS PER IS: 813 1986.

REF.DRG.NO.3 10113.0.20.200.121

QTY.	DESCRIPTION	DIMENSIONS	ITEM NO.	REF. DRGS	MATL.SPEC.	WT/UNIT IN KGS	REMARKS
1	WEB	4 x 87 x 87	1		RDSO/SPEC C-K201 X2CrNi12	0.236	

GROUP: 1-6 ROOF ASSEMBLY | SURFACE AREA IN Sq.m.:0.016 | WT/ASSY IN Kgs:0.236

WEB

SCALE 1:1	SSE/D	Prasad
	CHD	
ALT.	ALTD	
	DRN	K.Sriram

DATE OF LATEST ALT.	DATE OF FIRST ISSUE	AME/SME
	21-03-2013	

INDIAN RAILWAY STANDARDS

INTEGRAL COACH FACTORY, CHENNAI - 600038

SHEET 1 OF 1

AAA16939 A3

AAA16940

▽ ROUGH MACHINED	ROUGH CLEANED
▽▽ FINISH MACHINED	BURRS REMOVED
▽▽▽ FINE FINISH MACHINED	CHAMFERED

REVISIONS			
ALT.	ZONE	DESCRIPTION	APPROVED & DATE

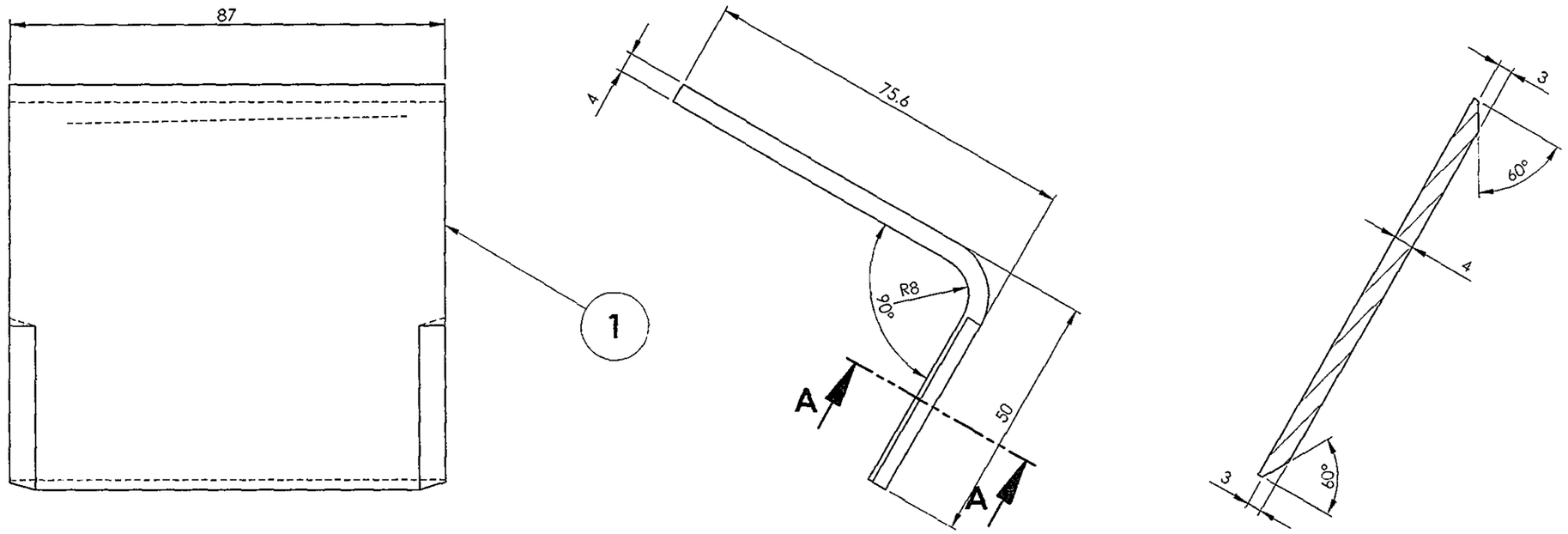

SECTION A-A

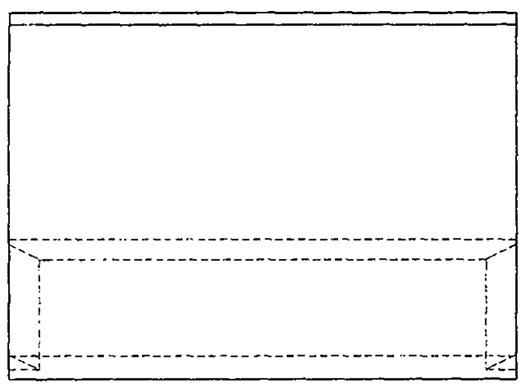

ALL DIMENSIONS ARE IN mm UNLESS OTHERWISE SPECIFIED. FOR UNTOLERANCED DIMENSIONS AND ROUGHNESS VALUES, REFER DRAWING NO ICF/STD 9-0 001.
ANY MANUAL ALTERATION SHALL AUTOMATICALLY RENDER THIS DRAWING INVALID. WELDING SYMBOLS ARE AS PER IS: 813 1986.

REF.DRG.NO.3 10113.0.20.200.117

QTY.	DESCRIPTION	DIMENSIONS	ITEM NO.	REF. DRGS	MATL.SPEC.	WT/UNIT IN KGS	REMARKS
1	STIFFENING ANGLE	4 x 87 x 118	1		RDSO/SPEC C-K201 X2CrNi12	0.322	

GROUP: 1-6 ROOF ASSEMBLY | SURFACE AREA IN Sq.m.:0.022 | WT/ASSY IN Kgs:0.322

STIFFENING ANGLE

SCALE 1:1	SSE/D	Murugaprasad
	CHD	
ALT.	ALTD	
	DRN	K.Sriram

INDIAN RAILWAY STANDARDS
INTEGRAL COACH FACTORY, CHENNAI - 600038

SHEET 1 OF 1

AAA16940 A3

DATE OF LATEST ALT.	DATE OF FIRST ISSUE	AME/SME
	21-03-2013	

AAA16941

▽ ROUGH MACHINED	(01) ROUGH CLEANED
▽▽ FINISH MACHINED	(01b) BURRS REMOVED
▽▽▽ FINE FINISH MACHINED	(18) CHAMFERED

REVISIONS			
ALT.	ZONE	DESCRIPTION	APPROVED & DATE

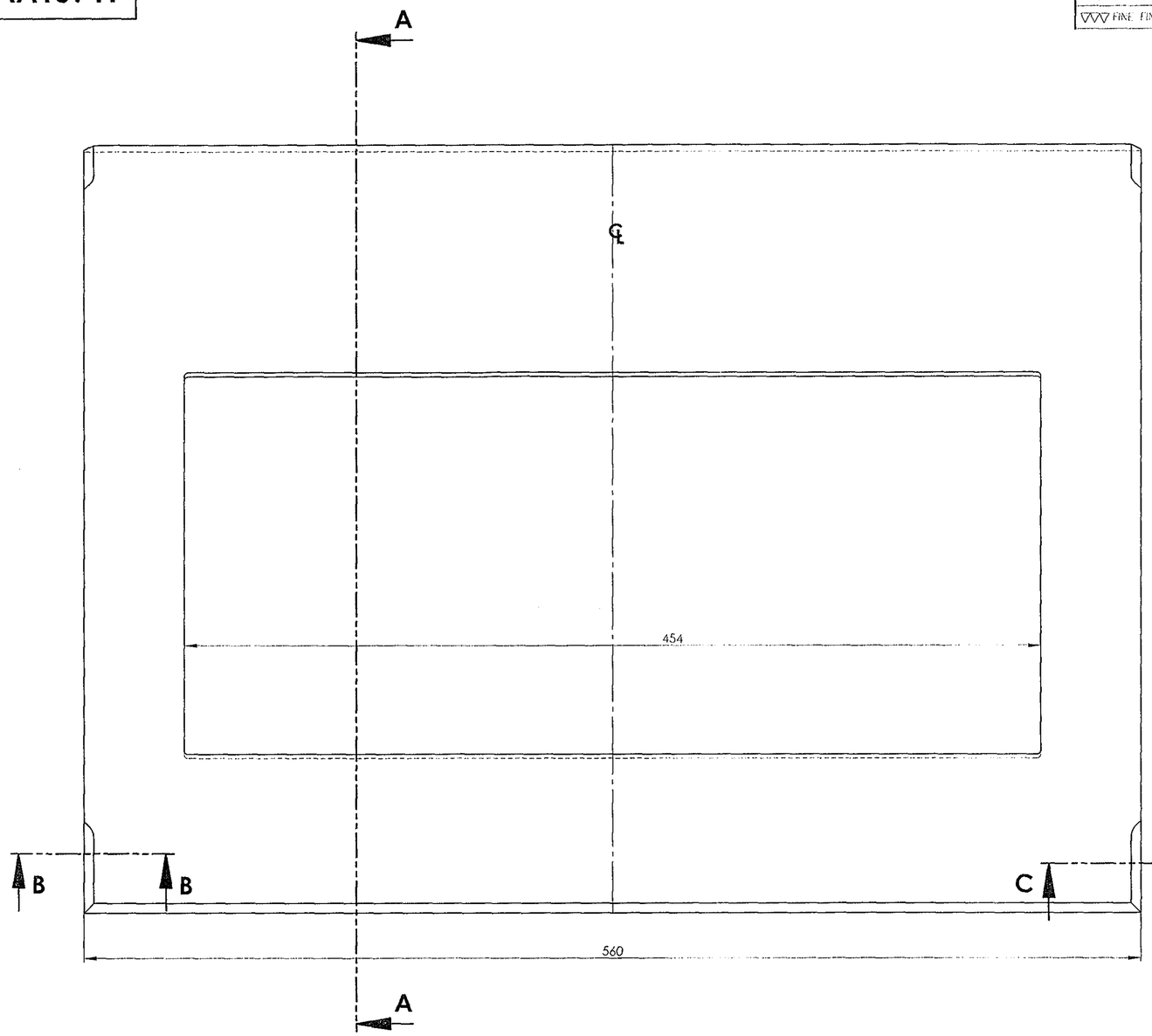

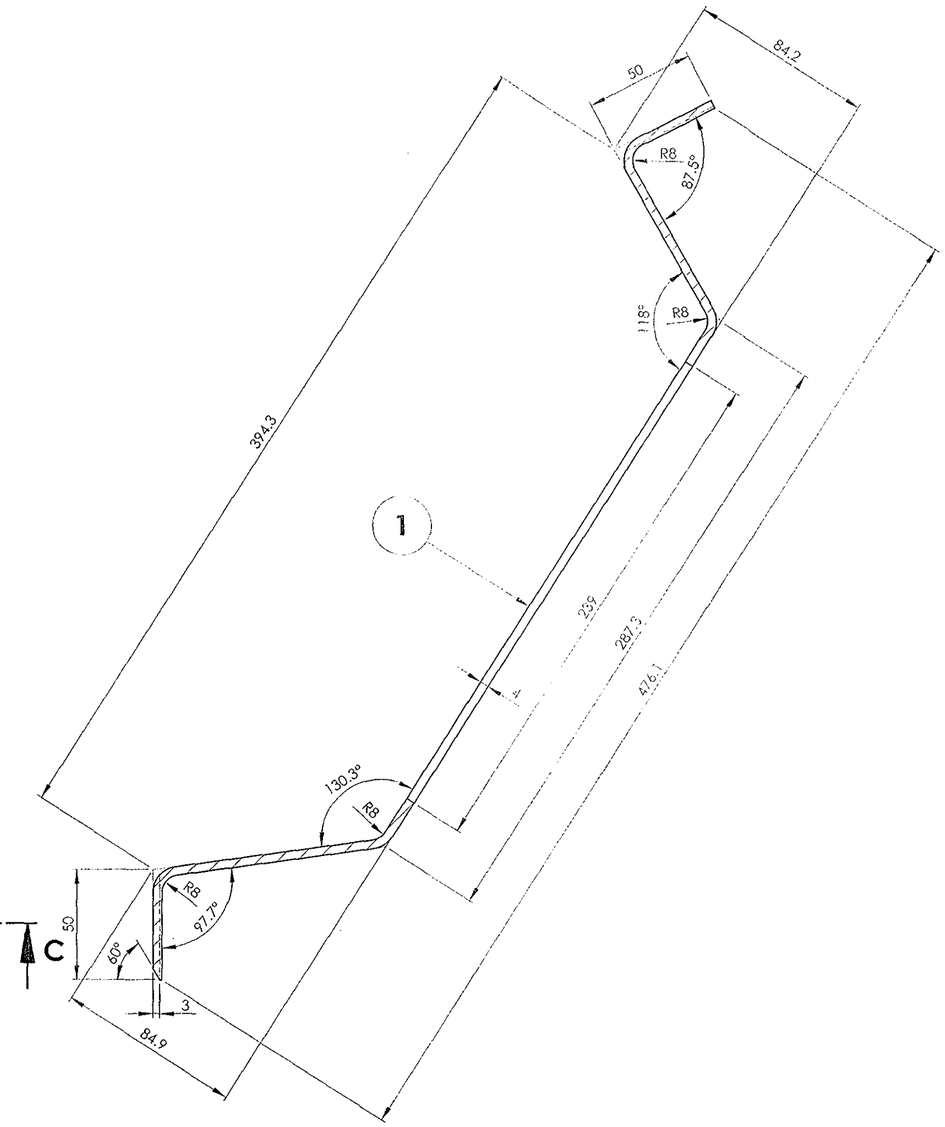

SECTION A-A
SCALE 1 : 2

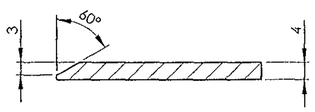

SECTION B-B
SCALE 1 : 1

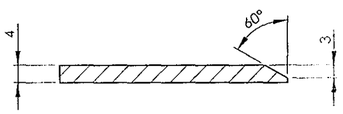

SECTION C-C
SCALE 1 : 1

ALL DIMENSIONS ARE IN mm UNLESS OTHERWISE SPECIFIED. FOR UNTOLERANCED DIMENSIONS AND ROUGHNESS VALUES. REFER DRAWING NO ICF/STD-9-0-001.
ANY MANUAL ALTERATION SHALL AUTOMATICALLY RENDER THIS DRAWING INVALID. WELDING SYMBOLS ARE AS PER IS:813-1986.

QTY.	DESCRIPTION	DIMENSIONS	ITEM NO.	REF. DRGS	MATL.SPEC.	WT/UNIT IN KGS	REMARKS
1	TERMINAL FRAME	4 x 560 x 568	1		RDSO/SPEC C-K201 X2CrNi12	6.658	

GROUP: 1-6 ROOF ASSEMBLY | SURFACE AREA IN Sq.m.: 0.432 | WT/ASSY IN Kgs:6.658

TERMINAL FRAME

SCALE 1:2	SSE/D	Prasad
	CHD	
ALT	ALTD	
	DRN	K.Sriram

INDIAN RAILWAY STANDARDS
INTEGRAL COACH FACTORY, CHENNAI - 600038

SHEET 1 OF 1

AAA16941 A2

	21-03-2013	
DATE OF LATEST ALT.	DATE OF FIRST ISSUE	AME/SME

REF.DRG.NO.1 10113.0.20.200.127

AAA16942

▽ ROUGH MACHINED	(C) ROUGH CLEANED
▽▽ FINISH MACHINED	(B) BURRS REMOVED
▽▽▽ FINE FINISH MACHINED	(8) CHAMFERED

REVISIONS			
ALT.	ZONE	DESCRIPTION	APPROVED & DATE

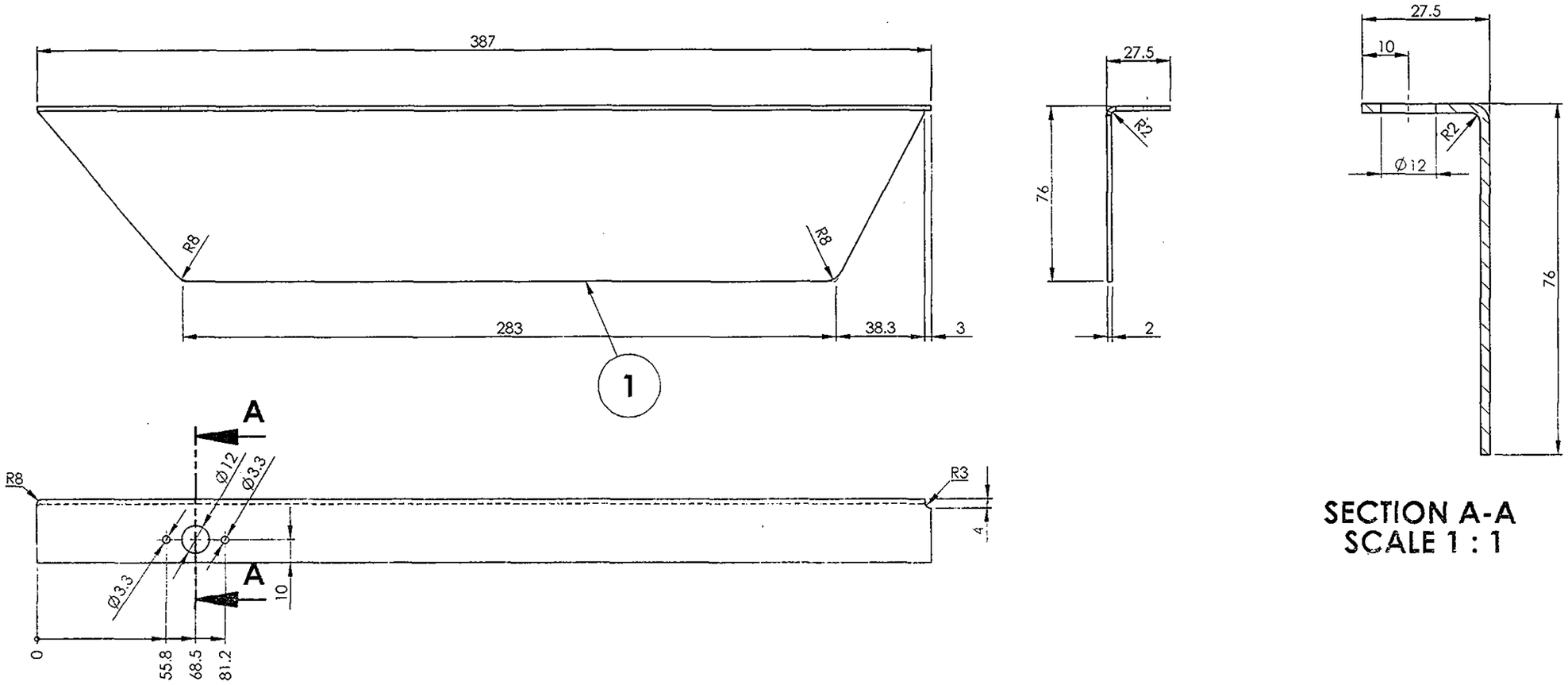

SECTION A-A
SCALE 1 : 1

ALL DIMENSIONS ARE IN mm UNLESS OTHERWISE SPECIFIED. FOR UNTOLERANCED DIMENSIONS AND ROUGHNESS VALUES, REFER DRAWING NO ICF/STD 9.0.001.
ANY MANUAL ALTERATION SHALL AUTOMATICALLY RENDER THIS DRAWING INVALID. WELDING SYMBOLS ARE AS PER IS: 813-1986.

REF.DRG.NO.3 10113.0.20.200.128

QTY.	DESCRIPTION	DIMENSIONS	ITEM NO.	REF. DRGS	MATL.SPEC.	WT/UNIT IN KGS	REMARKS
1	CLOSING ANGLE	2 x 101 x 387	1		RDSO/SPEC C-K201 X2CrNi12	0.556	

GROUP: 1-6 ROOF ASSEMBLY | SURFACE AREA IN Sq.m.:0.071 | WT./ASSY IN Kgs:0.556

CLOSING ANGLE

SCALE 1:2	SSE/D	Siva Prasad
	CHD	
ALT.	ALTD	
	DRN	K.Sriram

INDIAN RAILWAY STANDARDS
INTEGRAL COACH FACTORY, CHENNAI - 600038

SHEET 1 OF 1

AAA16942 | A3

DATE OF LATEST ALT.	DATE OF FIRST ISSUE	AME/SME
	21-03-2013	

AAA16943

▽ ROUGH MACHINED	ROUGH CLEANED
▽▽ FINISH MACHINED	BURRS REMOVED
▽▽▽ FINE FINISH MACHINED	CHAMFERED

REVISIONS			
ALT.	ZONE	DESCRIPTION	APPROVED & DATE

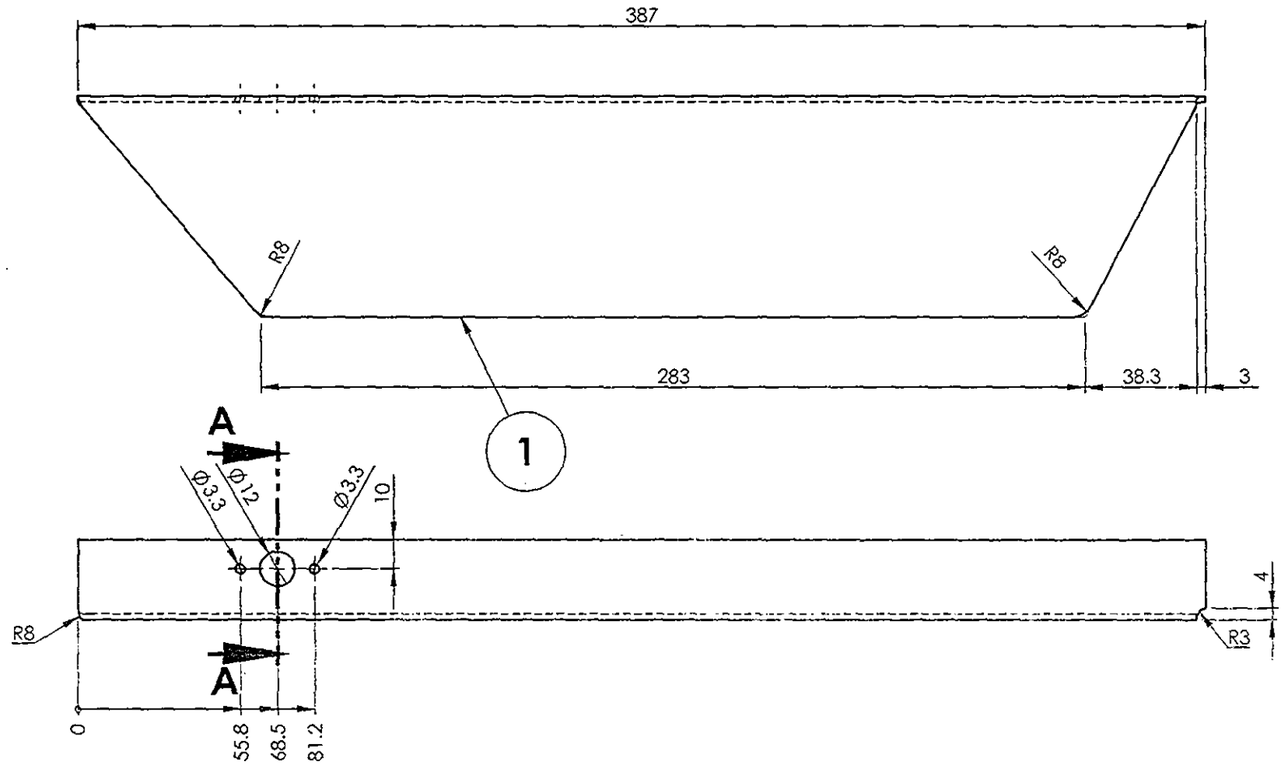

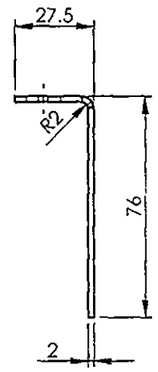

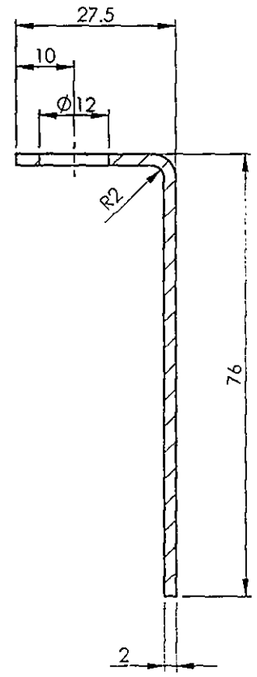

SECTION A-A
SCALE 1 : 1

ALL DIMENSIONS ARE IN mm UNLESS OTHERWISE SPECIFIED. FOR UNTOLERANCED DIMENSIONS AND ROUGHNESS VALUES, REFER DRAWING NO ICF/STD-9 0 001.
ANY MANUAL ALTERATION SHALL AUTOMATICALLY RENDER THIS DRAWING INVALID. WELDING SYMBOLS ARE AS PER IS: 813-1986.

QTY.	DESCRIPTION	DIMENSIONS	ITEM NO.	REF. DRGS	MATL.SPEC.	WT/UNIT IN KGS	REMARKS
1	CLOSING ANGLE	2 x 101 x 387	1		RDSO/SPEC C-K201 X2CrNi12	0.069	

GROUP: 1-6 ROOF ASSEMBLY | SURFACE AREA IN Sq.m.:0.07 | WT/ASSY IN Kgs:0.56

CLOSING ANGLE

SCALE	SSE/D	
1:2	CHD	
ALT.	ALTD	
	DRN	K.Sriram

INDIAN RAILWAY STANDARDS
INTEGRAL COACH FACTORY, CHENNAI - 600038

SHEET 1 OF 1

AAA16943 A3

DATE OF LATEST ALT.	DATE OF FIRST ISSUE	AME/SME
	21-03-2013	

REF.DRG.NO.3 10113.0.20.200.129

AAA51072

▽ ROUGH MACHINED	(01) ROUGH CLEANED
▽▽ FINISH MACHINED	(01b) BURRS REMOVED
▽▽▽ FINE FINISH MACHINED	(18) CHAMFERED

REVISIONS

ALT.	ZONE	DESCRIPTION	APPROVED & DATE
a		NAME PLATE REVISED.	-sd-
b		DESIGN REVISED.	-sd-
c		BATCH & SERIAL NO. ADDED	-sd-
d		NOTE-2 ADDED.	

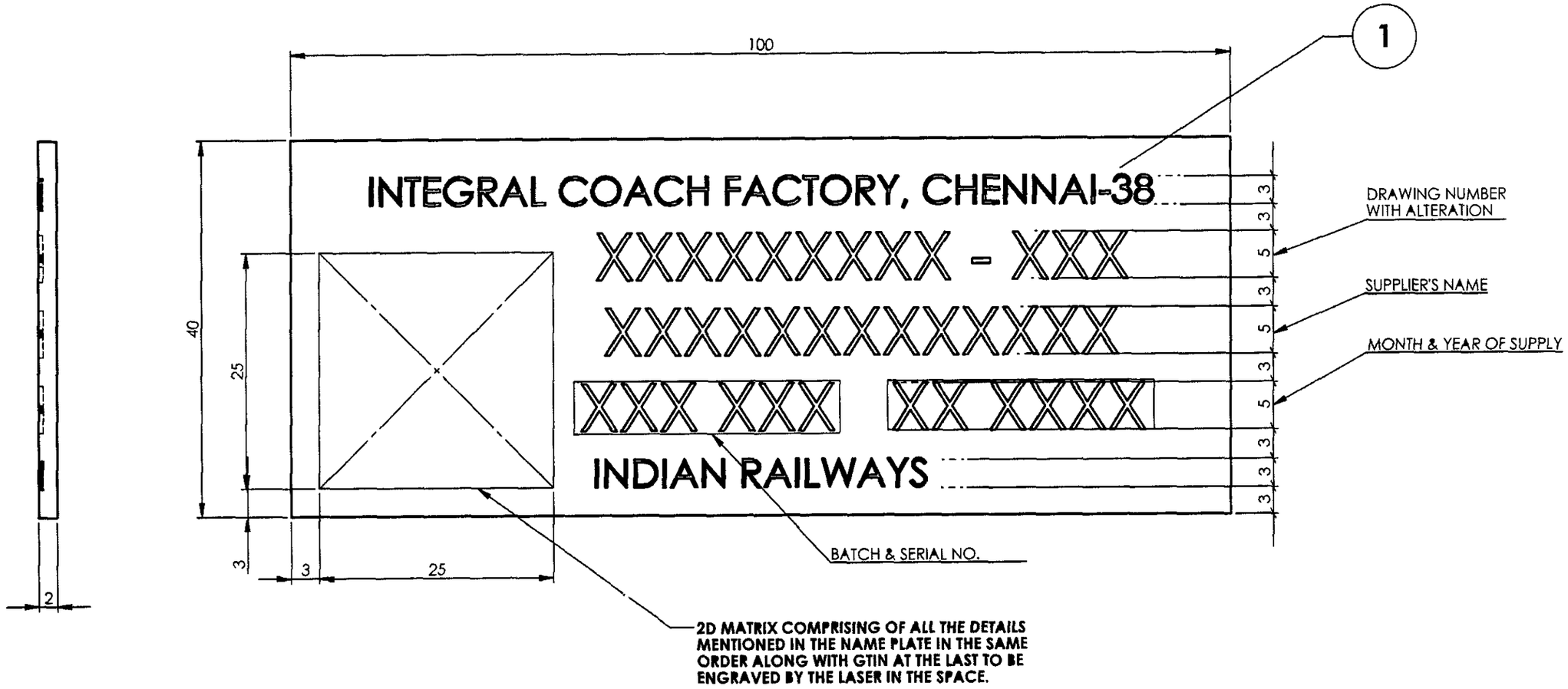

NOTE:

1. LETTERS TO BE PUNCHED OR ENGRAVED.

$ 2. ALTERNATIVELY **AISI-304/SS-304 (X02Cr19Ni10)/IS:6911(X04Cr19Ni9)** ALSO ACCEPTABLE.

QTY	DESCRIPTION	DIMENSIONS	ITEM NO.	REF. DRGS	MATL.SPEC.	WT/UNIT IN KGS	REMARKS
1	NAME PLATE FOR SUPPLIER IDENTIFICATION	2x40x100	1		RDSO/SPEC C-K201 X2 Cr Ni 12	0.063	$

GROUP: 5-1 Body Side Doors | SURFACE AREA IN Sq.m.:0.009 | WT/ASSY IN Kgs:

NAME PLATE FOR SUPPLIER IDENTIFICATION

SCALE 2:1	SSE/D	
	CHD	
ALT. d	ALTD	KUNTI THAKUR
	DRN	G. NAGESWARAN

INDIAN RAILWAY STANDARDS
INTEGRAL COACH FACTORY, CHENNAI - 600038

SHEET 1 OF 1

AAA51072 A3

DATE OF LATEST ALT.	DATE OF FIRST ISSUE	AME/SME
06-07-2024	02.06.2010	

REF.DRG.NO.

...NS ARE IN mm UNLESS OTHERWISE SPECIFIED. FOR UNTOLERANCED DIMENSIONS AND ROUGHNESS VALUES, REFER DRAWING NO ICF/STD-9-0-001.
ANY MANUAL ALTERATION SHALL AUTOMATICALLY RENDER THIS DRAWING INVALID. WELDING SYMBOLS ARE AS PER IS: 813-1986.
WEIGHT GIVEN IN DRAWING IS FOR INDICATIVE PURPOSE ONLY

AAB10005

▽ ROUGH MACHINED	(1) ROUGH CLEANED
▽▽ FINISH MACHINED	(2) BURRS REMOVED
▽▽▽ SUPER FINISH MACHINED	(3) CHAMFERED

REVISIONS			
ALT.	ZONE	DESCRIPTION	APPROVED & DATE

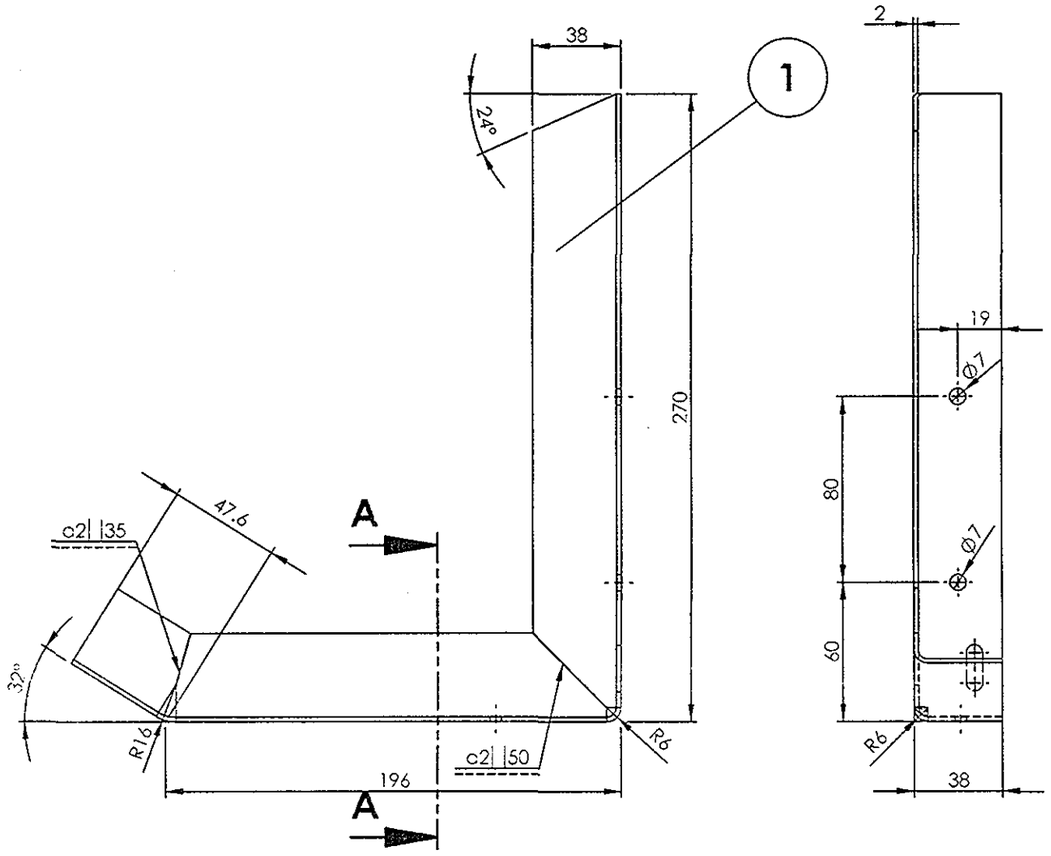

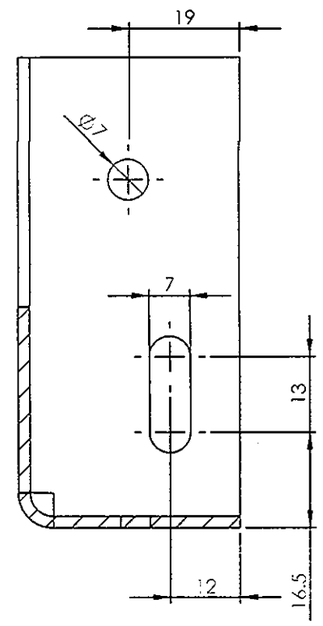

SECTION A-A
SCALE 1 : 1

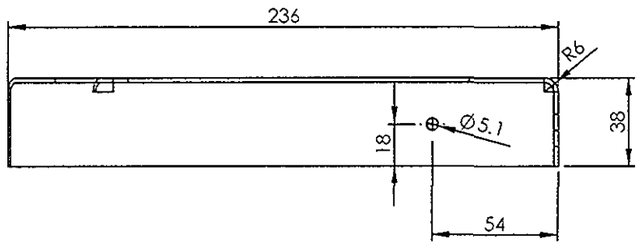

QTY.	DESCRIPTION	DIMENSIONS	ITEM NO.	REF. DRGS	MATL.SPEC.	WT/UNIT IN KGS	REMARKS
1	BRACKET	2x72x508	1		RDSO/SPEC C-K201 X2CrNi12	0.547	

GROUP: 1-0 | SURFACE AREA IN Sq.m.:0.071 | WT/ASSY IN Kgs:0.547

BRACKET

SCALE 1:2.5	SSE/D	
	CHD	
ALT.	ALTD	
	DRN	L.PANDURANGA RAO

INDIAN RAILWAY STANDARDS

INTEGRAL COACH FACTORY, CHENNAI - 600038

SHEET 1 OF 1

AAB10005 A3

DATE OF LATEST ALT.	DATE OF FIRST ISSUE	AME/SME
	10-04-2013	13/6/13

REF.DRG.NO.3 10113.0.20.095.112

ALL DIMENSIONS ARE IN mm UNLESS OTHERWISE SPECIFIED. FOR UNTOLERANCED DIMENSIONS AND ROUGHNESS VALUES, REFER DRAWING NO IC1/SID 9 0 (X).
ANY MANUAL ALTERATION SHALL AUTOMATICALLY RENDER THIS DRAWING INVALID. WELDING SYMBOLS ARE AS PER IS: 813 1986.

AAB10006

▽ ROUGH MACHINED	ROUGH CLEANED
▽▽ FINISH MACHINED	BURRS REMOVED
▽▽▽ FINE FINISH MACHINED	CHAMFERED

REVISIONS			
ALT.	ZONE	DESCRIPTION	APPROVED & DATE

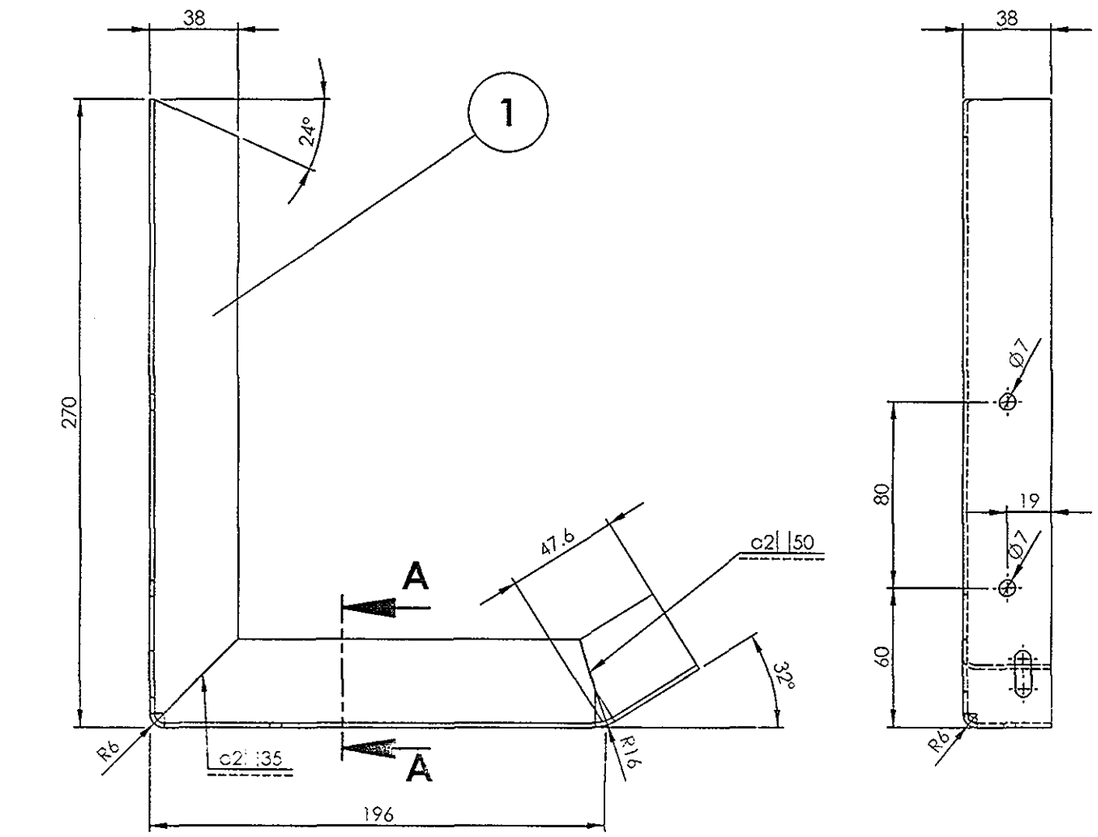

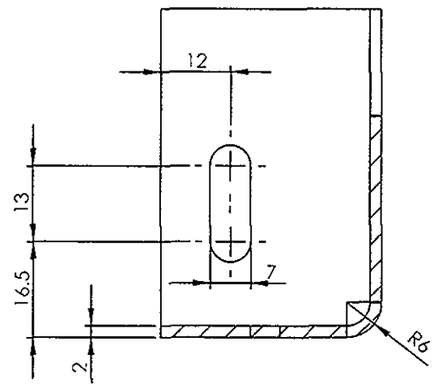

SECTION A-A
SCALE 1 : 1

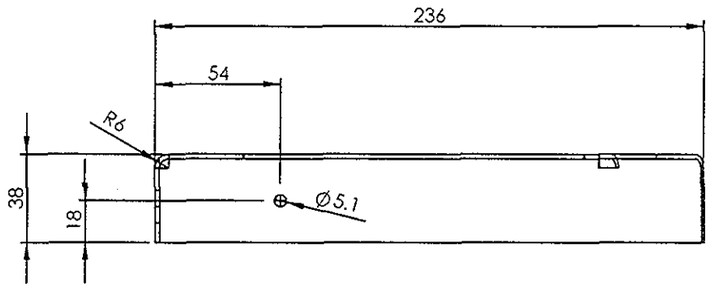

ALL DIMENSIONS ARE IN mm UNLESS OTHERWISE SPECIFIED. FOR UNTOLERANCED DIMENSIONS AND SURFACE ROUGHNESS VALUES, REFER DRAWING NO ICF/SID 9 0 001.
ANY MANUAL ALTERATION SHALL AUTOMATICALLY RENDER THIS DRAWING INVALID. WELDING SYMBOLS ARE AS PER IS: 813 1986.

REF.DRG.NO.3 10113.0.20.095.113

QTY.	DESCRIPTION	DIMENSIONS	ITEM NO.	REF. DRGS	MATL.SPEC.	WT/UNIT IN KGS	REMARKS
1	BRACKET	2x72x508	1		RDSO/SPEC C-K201 X2CrNi12	0.547	

GROUP: 1-0 | SURFACE AREA IN Sq.m.:0.071 | WT/ASSY IN Kgs:0.547

BRACKET

SCALE 1:2	SSE/D	
	CHD	
ALT.	ALTD	
	DRN	L.PANDURANGA RAO

INDIAN RAILWAY STANDARDS
INTEGRAL COACH FACTORY, CHENNAI - 600038

SHEET 1 OF 1

AAB10006 | A3

DATE OF LATEST ALT.	DATE OF FIRST ISSUE	AME/SME
	10-04-2013	

AAB10008

▽ ROUGH MACHINED	(01) ROUGH CLEANED
▽▽ FINISH MACHINED	(01b) BURRS REMOVED
▽▽▽ FINE FINISH MACHINED	(18) CHAMFERED

REVISIONS			
ALT.	ZONE	DESCRIPTION	APPROVED & DATE

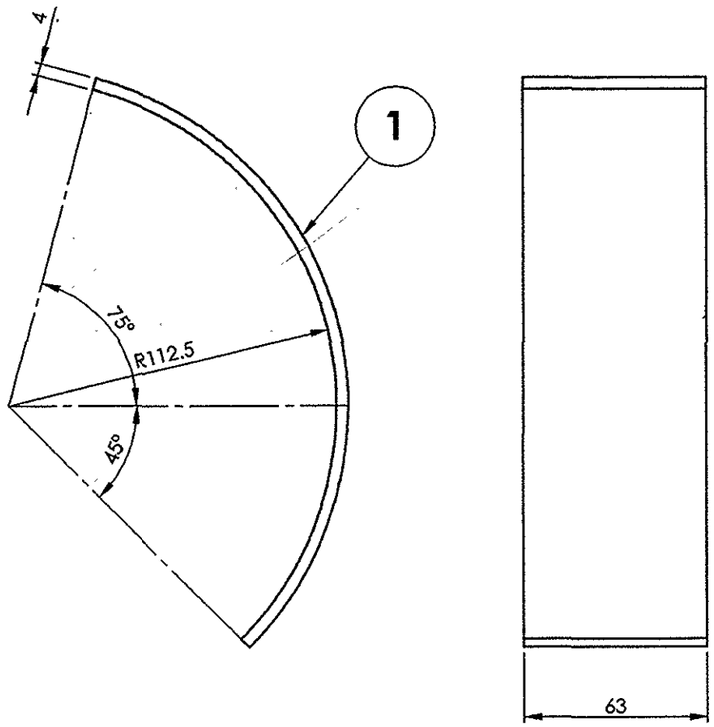

ALL DIMENSIONS ARE IN mm UNLESS OTHERWISE SPECIFIED. FOR UNTOLERANCED DIMENSIONS AND ROUGHNESS VALUES, REFER DRAWING NO ICF/STD-9-0-001.
ANY MANUAL ALTERATION SHALL AUTOMATICALLY RENDER THIS DRAWING INVALID. WELDING SYMBOLS ARE AS PER IS: 813-1986.

QTY.	DESCRIPTION	DIMENSIONS	ITEM NO.	REF. DRGS	MATL.SPEC.	WT/UNIT IN KGS	REMARKS
1	RING	4 x 63 x 240	1		RDSO/SPEC C-K201 X2CrNi12	0.483	

GROUP: 1-6 ROOF ASSEMBLY | SURFACE AREA IN Sq.m.:0.033 | WT/ASSY IN Kgs:0.483

RING

SCALE 1:2	SSE/D	
	CHD	
ALT.	ALTD	
	DRN	K.Sriram

INDIAN RAILWAY STANDARDS
INTEGRAL COACH FACTORY, CHENNAI - 600038

SHEET 1 OF 1

AAB10008 A3

DATE OF LATEST ALT.	DATE OF FIRST ISSUE	AME/SME
	12-06-2013	

REF.DRG.NO.-

AAB10010

▽ ROUGH MACHINED	(01) ROUGH CLEANED
▽▽ FINISH MACHINED	(01b) BURRS REMOVED
▽▽▽ FINE FINISH MACHINED	(18) CHAMFERED

REVISIONS			
ALT.	ZONE	DESCRIPTION	APPROVED & DATE

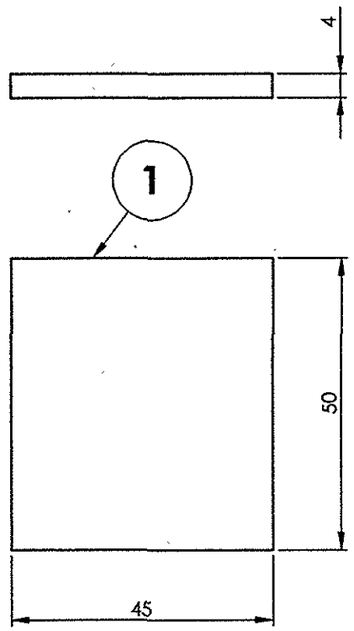

ALL DIMENSIONS ARE IN mm UNLESS OTHERWISE SPECIFIED. FOR UNTOLERANCED DIMENSIONS AND ROUGHNESS VALUES, REFER DRAWING NO ICF/STD-9-0-001.
ANY MANUAL ALTERATION SHALL AUTOMATICALLY RENDER THIS DRAWING INVALID. WELDING SYMBOLS ARE AS PER IS: 813-1986.

REF:DRG.NO.-

QTY.	DESCRIPTION	DIMENSIONS	ITEM NO.	REF. DRGS	MATL.SPEC.	WT/UNIT IN KGS	REMARKS
1	PLATE	4 x 45 x 50	1		RDSO/SPEC C-K201 X2CrNi12	0.072	

GROUP: 1-6 ROOF ASSEMBLY | SURFACE AREA IN Sq.m.:0.005 | WT/ASSY IN Kgs:0.072

PLATE

SCALE	SSE/D	
1:1	CHD	
ALT.	ALTD	
	DRN	K.Sriram

DATE OF LATEST ALT.	DATE OF FIRST ISSUE	AME/SME
	12-06-2013	

INDIAN RAILWAY STANDARDS

INTEGRAL COACH FACTORY, CHENNAI - 600038

SHEET 1 OF 1

AAB10010 A3

AAB10073

▽ ROUGH MACHINED	(01) ROUGH CLEANED
▽▽ FINISH MACHINED	(01b) BURRS REMOVED
▽▽▽ FINE FINISH MACHINED	(18) CHAMFERED

REVISIONS			
ALT.	ZONE	DESCRIPTION	APPROVED & DATE

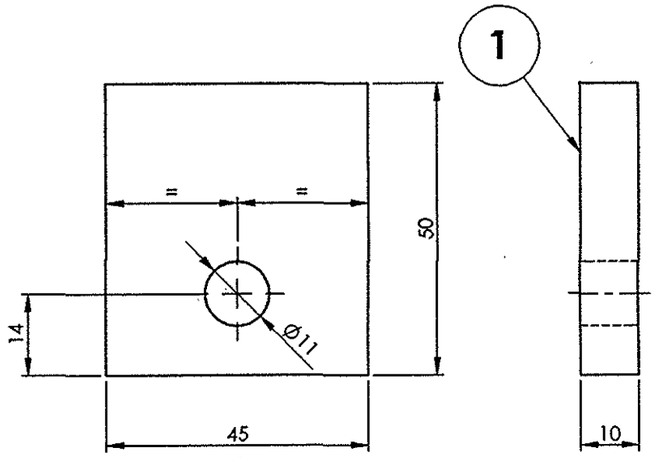

ALL DIMENSIONS ARE IN mm UNLESS OTHERWISE SPECIFIED. FOR UNTOLERANCED DIMENSIONS AND ROUGHNESS VALUES, REFER DRAWING NO ICF/STD-9-0-001.
ANY MANUAL ALTERATION SHALL AUTOMATICALLY RENDER THIS DRAWING INVALID. WELDING SYMBOLS ARE AS PER IS: 813-1986.

REF.DRG.NO.

QTY.	DESCRIPTION	DIMENSIONS	ITEM NO.	REF. DRGS	MATL.SPEC.	WT/UNIT IN KGS	REMARKS
1	PLATE	10 x 45 x 50	1		RDSO/SPEC C-K201 X2CrNi12	0.172	

GROUP: 1-6 ROOF ASSEMBLY | SURFACE AREA IN Sq.m.:0.007 | WT/ASSY IN Kgs:0.172

PLATE

SCALE	SSE/D	Prasad
1:1	CHD	
ALT.	ALTD	
	DRN	K.Sriram

INDIAN RAILWAY STANDARDS

INTEGRAL COACH FACTORY, CHENNAI - 600038

SHEET 1 OF 1

AAB10073 A3

DATE OF LATEST ALT.	DATE OF FIRST ISSUE	AME/SME
	12-06-2013	

AAB16550

▽ ROUGH MACHINED	(01) ROUGH CLEANED
▽▽ FINISH MACHINED	(01b) BURRS REMOVED
▽▽▽ FINE FINISH MACHINED	(18) CHAMFERED

REVISIONS			
ALT.	ZONE	DESCRIPTION	APPROVED & DATE

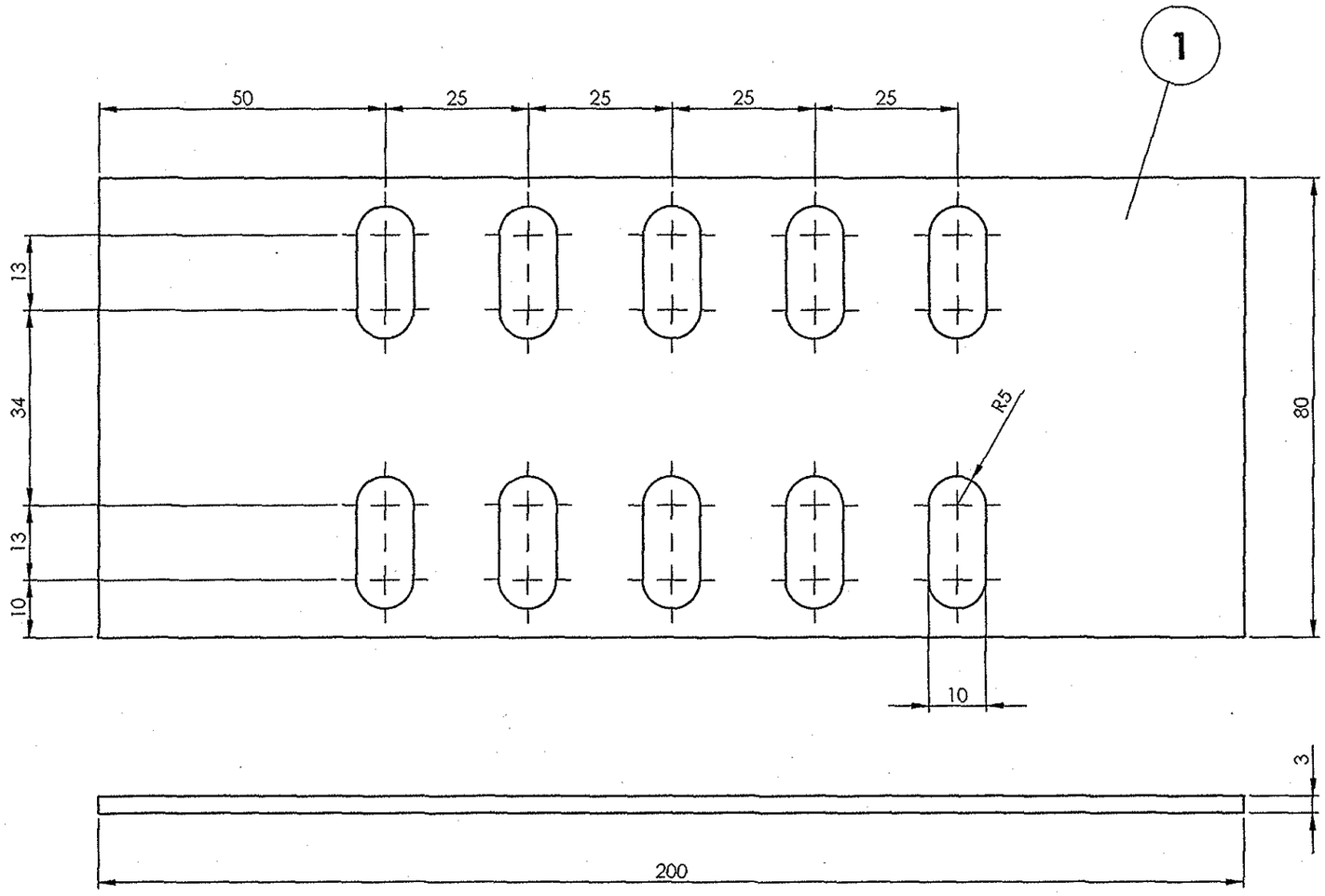

QTY.	DESCRIPTION	DIMENSIONS	ITEM NO.	REF. DRGS	MATL.SPEC.	WT/UNIT IN KGS	REMARKS
1	FLAT	3x80x200	1		RDSO/SPEC C-K201 X2CrNi12	0.33	

GROUP: 1-6 | SURFACE AREA IN Sq.m.: | WT/ASSY IN Kgs:

FLAT

SCALE 1:1	SSE/D	P. Sharma
	CHD	
ALT.	ALTD	
	DRN	P.MURUGAN

INDIAN RAILWAY STANDARDS

INTEGRAL COACH FACTORY, CHENNAI - 600038

SHEET 1 OF 1

AAB16550 A3

DATE OF LATEST ALT.	DATE OF FIRST ISSUE	AME/SME
-	9/2/16	A. [illegible]

REF.DRG.NO.-

ALL DIMENSIONS ARE IN mm UNLESS OTHERWISE SPECIFIED. FOR UNTOLERANCED DIMENSIONS AND ROUGHNESS VALUES, REFER DRAWING NO ICF/STD-9-0-001.
ANY MANUAL ALTERATION SHALL AUTOMATICALLY RENDER THIS DRAWING INVALID. WELDING SYMBOLS ARE AS PER IS: 813-1986.
WEIGHT GIVEN IN DRAWING IS FOR INDICATIVE PURPOSE ONLY

AAD16884

▽ ROUGH MACHINED	(01) ROUGH CLEANED
▽▽ FINISH MACHINED	(61c) BURRS REMOVED
▽▽▽ FINE FINISH MACHINED	(18) CHAMFERED

REVISIONS			
ALT.	ZONE	DESCRIPTION	APPROVED & DATE

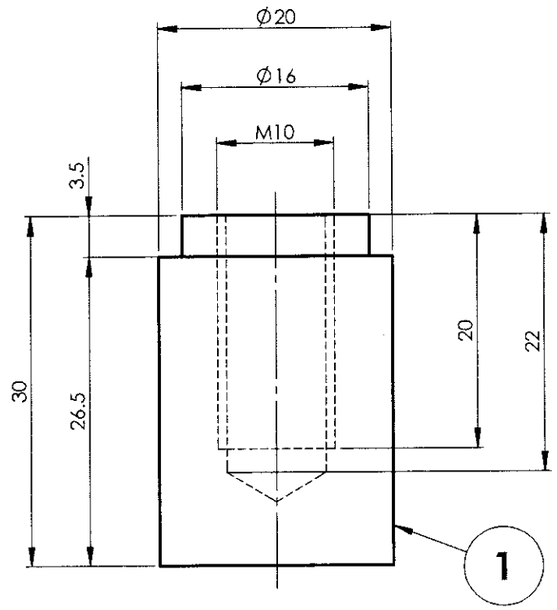

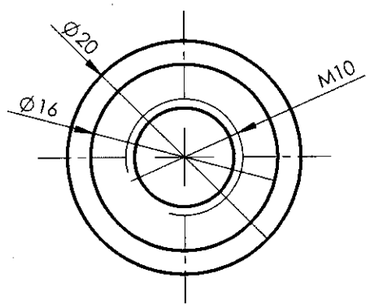

ALL DIMENSIONS ARE IN mm UNLESS OTHERWISE SPECIFIED. FOR UNTOLERANCED DIMENSIONS AND ROUGHNESS VALUES, REFER DRAWING NO ICF/STD-9-0-001.
ANY MANUAL ALTERATION SHALL AUTOMATICALLY RENDER THIS DRAWING INVALID. WELDING SYMBOLS ARE AS PER IS: 813-1986.
WEIGHT GIVEN IN DRAWING IS FOR INDICATIVE PURPOSE ONLY

QTY	DESCRIPTION	DIMENSIONS	ITEM NO.	REF. DRGS	MATL.SPEC.	WT/UNIT IN KGS	REMARKS
1	SCREWING PIECE	Ø 20 X 30	1		AISI 304	0.06	

GROUP: 1-6 Roof Construction

SURFACE AREA IN Sq.m.:

WT/ASSY IN Kgs:

SCREWING PIECE

SCALE 2:1	SSE/D	L. Pandurangaiah
	CHD	
ALT. -	ALTD	
	DRN	S K MUTHUKUMAR

INDIAN RAILWAY STANDARDS

INTEGRAL COACH FACTORY, CHENNAI - 600038

SHEET 1 OF 1

AAD16884 A3

DATE OF LATEST ALT.	DATE OF FIRST ISSUE	AME/SME
	06-03-21	6/3/21

REF.DRG.NO.

AAE16686

▽ ROUGH MACHINED	(01) ROUGH CLEANED		
▽▽ FINISH MACHINED	(01b) BURRS REMOVED		
▽▽▽ FINE FINISH MACHINED	(18) CHAMFERED		

REVISIONS

ALT.	ZONE	DESCRIPTION	APPROVED & DATE
a		DIMENSION REVISED. VIEWS UPDATED.	19/3/24

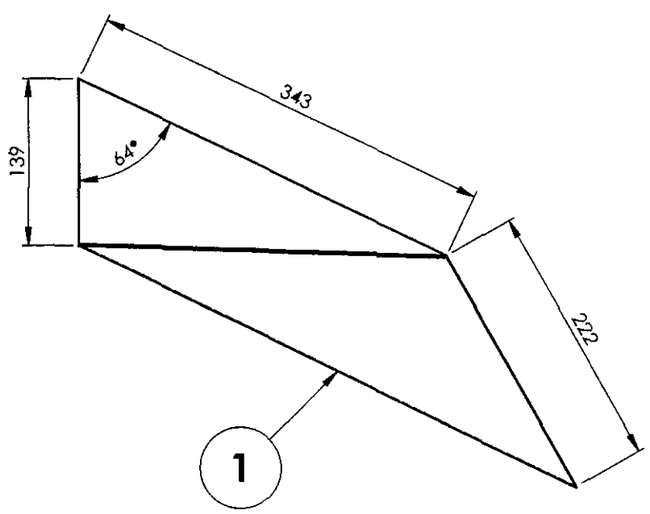

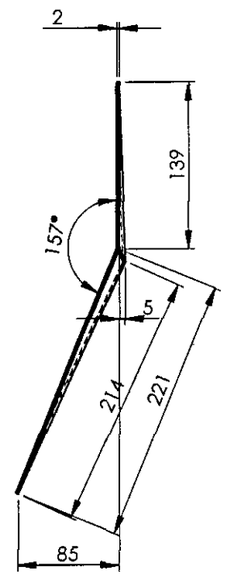

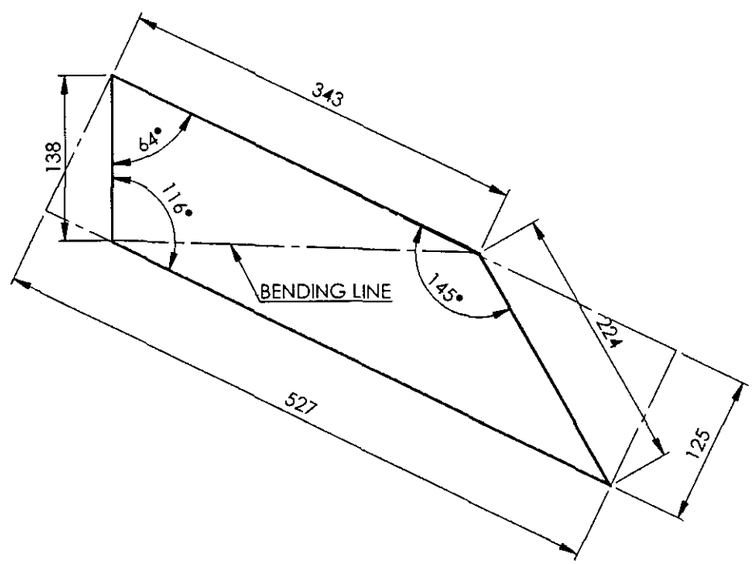

DEVELOPMENT VIEW

ALL DIMENSIONS ARE IN mm UNLESS OTHERWISE SPECIFIED. FOR UNTOLERANCED DIMENSIONS AND ROUGHNESS VALUES, REFER DRAWING NO ICF/STD-9-0-001.
ANY MANUAL ALTERATION SHALL AUTOMATICALLY RENDER THIS DRAWING INVALID. WELDING SYMBOLS ARE AS PER IS: 813-1986.

REF.DRG.NO.3 10113.0.20.200.140

DATE OF LATEST ALT.	DATE OF FIRST ISSUE	AME/SME
15-03-24	07-06-23	13/3/24

Default	DESCRIPTION	DIMENSIONS	ITEM NO.	REF. DRGS	MATL.SPEC.	WT/UNIT IN KGS	REMARKS
1	SIDE SHEET	2 x 126 x 531	1		RDSO/SPEC C-K201 X2CrNi12	0.865	

GROUP: 1-6 Roof Construction | SURFACE AREA IN Sq.m.:0.111 | WT/ASSY IN Kgs:0.865

SIDE SHEET

SCALE 1:5	SSE/D	L Pandiarajan
	CHD	
ALT. a	ALTD	E.SATHISH KUMAR
	DRN	E.SATHISH KUMAR

INDIAN RAILWAY STANDARDS
INTEGRAL COACH FACTORY, CHENNAI - 600038

SHEET 1 OF 1

AAE16686 A3

AAE16687

▽ ROUGH MACHINED	(01) ROUGH CLEANED
▽▽ FINISH MACHINED	(01b) BURRS REMOVED
▽▽▽ FINE FINISH MACHINED	(18) CHAMFERED

REVISIONS

ALT.	ZONE	DESCRIPTION	APPROVED & DATE
a		DIMENSION REVISED. VIEWS UPDATED.	19/3/24

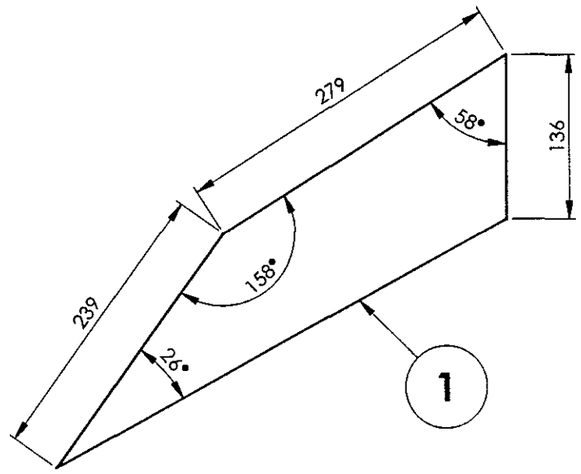

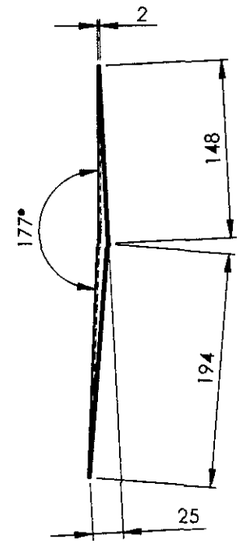

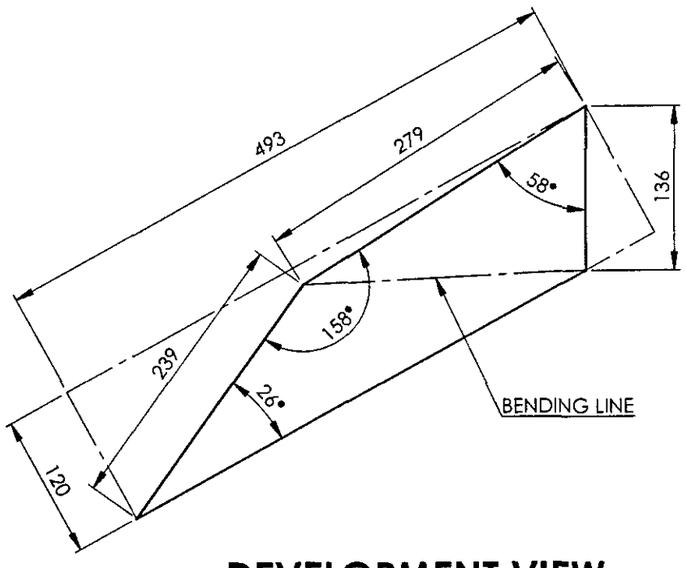

DEVELOPMENT VIEW

ALL DIMENSIONS ARE IN mm UNLESS OTHERWISE SPECIFIED. FOR UNTOLERANCED DIMENSIONS AND ROUGHNESS VALUES, REFER DRAWING NO ICF/STD-9-0-001.
ANY MANUAL ALTERATION SHALL AUTOMATICALLY RENDER THIS DRAWING INVALID. WELDING SYMBOLS ARE AS PER IS: 813-1986.

REF.DRG.NO.3 10113.0.20.200.144

DATE OF LATEST ALT.	DATE OF FIRST ISSUE	AME/SME
15-03-24	07-06-23	19/3/24

Default	DESCRIPTION	DIMENSIONS	ITEM NO.	REF. DRGS	MATL.SPEC.	WT/UNIT IN KGS	REMARKS
1	SIDE SHEET	2 x 119 x 493	1		RDSO/SPEC C-K201 X2CrNi12	0.613	

GROUP: 1-6 Roof Construction | SURFACE AREA IN Sq.m.:0.079 | WT/ASSY IN Kgs:0.613

SIDE SHEET

SCALE 1:5	SSE/D	S Pandiarajan
	CHD	
ALT. a	ALTD	E.SATHISH KUMAR
	DRN	E.SATHISH KUMAR

INDIAN RAILWAY STANDARDS
INTEGRAL COACH FACTORY, CHENNAI - 600038

SHEET 1 OF 1

AAE16687 A3

AAE16688

▽ ROUGH MACHINED	(01) ROUGH CLEANED
▽▽ FINISH MACHINED	(01b) BURRS REMOVED
▽▽▽ FINE FINISH MACHINED	(18) CHAMFERED

REVISIONS			
ALT.	ZONE	DESCRIPTION	APPROVED & DATE
a		DIMENSION REVISED. VIEWS UPDATED.	15/3/24

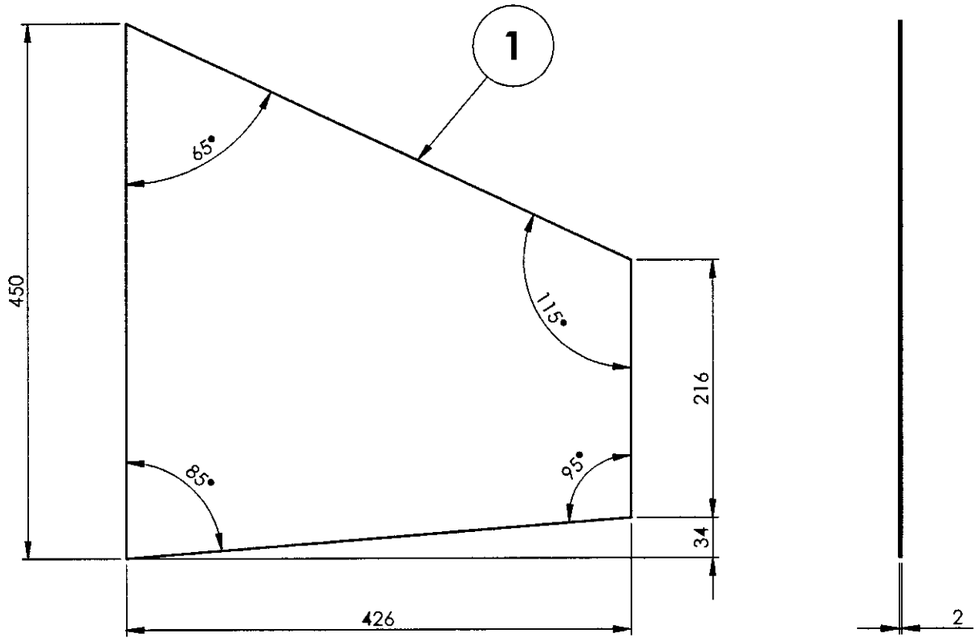

ALL DIMENSIONS ARE IN mm UNLESS OTHERWISE SPECIFIED. FOR UNTOLERANCED DIMENSIONS AND ROUGHNESS VALUES, REFER DRAWING NO ICF/STD-9-0-001.
ANY MANUAL ALTERATION SHALL AUTOMATICALLY RENDER THIS DRAWING INVALID. WELDING SYMBOLS ARE AS PER IS: 813-1986.

REF.DRG.NO.3 10113.0.20.200.141

1	BOTTOM SHEET	2 x 426 x 450	1		RDSO/SPEC C-K201 X2CrNi12	2.269	
Default	DESCRIPTION	DIMENSIONS	ITEM NO.	REF. DRGS	MATL.SPEC.	WT/UNIT IN KGS	REMARKS

GROUP: 1-6 Roof Construction | SURFACE AREA IN Sq.m.:0.287 | WT/ASSY IN Kgs:2.269

BOTTOM SHEET

SCALE 1:5	SSE/D	R Pandiyan
	CHD	
ALT. a	ALTD	E.SATHISH KUMAR
	DRN	E.SATHISH KUMAR

INDIAN RAILWAY STANDARDS
INTEGRAL COACH FACTORY, CHENNAI - 600038

SHEET 1 OF 1

AAE16688 | A3

15-03-24	07-06-23	15/3/24
DATE OF LATEST ALT.	DATE OF FIRST ISSUE	AME/SME

AAE16689

▽ ROUGH MACHINED	(01) ROUGH CLEANED		
▽▽ FINISH MACHINED	(01b) BURRS REMOVED		
▽▽▽ FINE FINISH MACHINED	(18) CHAMFERED		

REVISIONS

ALT.	ZONE	DESCRIPTION	APPROVED & DATE
a		DIMENSION REVISED. VIEWS UPDATED.	8/3/24

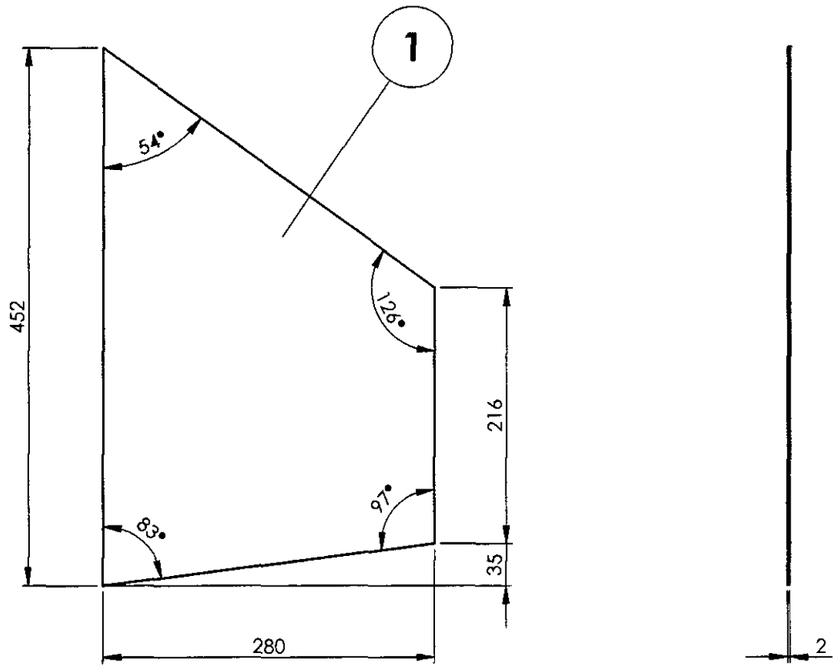

ALL DIMENSIONS ARE IN mm UNLESS OTHERWISE SPECIFIED. FOR UNTOLERANCED DIMENSIONS AND ROUGHNESS VALUES, REFER DRAWING NO ICF/STD-9-0-001.
ANY MANUAL ALTERATION SHALL AUTOMATICALLY RENDER THIS DRAWING INVALID. WELDING SYMBOLS ARE AS PER IS: 813-1986.

REF.DRG.NO.3 10113.0.20.200.139

Default	DESCRIPTION	DIMENSIONS	ITEM NO.	REF. DRGS	MATL.SPEC.	WT/UNIT IN KGS	REMARKS
1	TOP SHEET	2 x 280x 452	1		RDSO/SPEC C-K201 X2CrNi12	1.492	

GROUP: 1-6 Roof Construction | SURFACE AREA IN Sq.m.:0.189 | WT/ASSY IN Kgs: 1.492

TOP SHEET

SCALE 1:5	SSE/D	L. Dandiwagalu
	CHD	
ALT. a	ALTD	E.SATHISH KUMAR
	DRN	E.SATHISH KUMAR

INDIAN RAILWAY STANDARDS
INTEGRAL COACH FACTORY, CHENNAI - 600038

SHEET 1 OF 1

AAE16689 A3

DATE OF LATEST ALT.	DATE OF FIRST ISSUE	AME/SME
15-03-24	07-06-23	8/3/24

AAF16122

▽ ROUGH MACHINED	(01) ROUGH CLEANED
▽▽ FINISH MACHINED	(01b) BURRS REMOVED
▽▽▽ FINE FINISH MACHINED	(18) CHAMFERED

REVISIONS			
ALT.	ZONE	DESCRIPTION	APPROVED & DATE
a		CUTAWAY ADDED AND VIEWS UPDATED.	

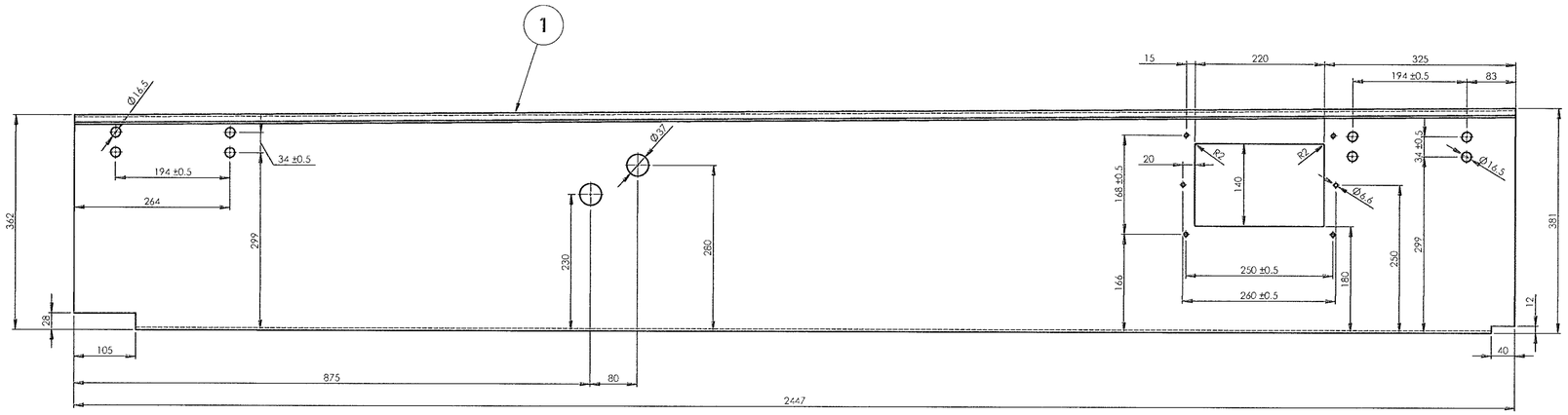

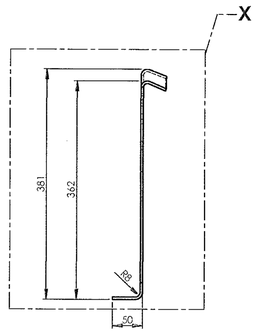

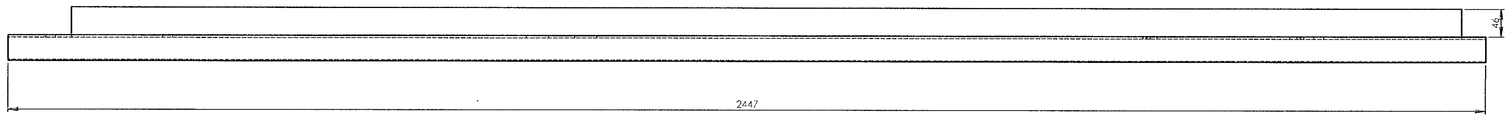

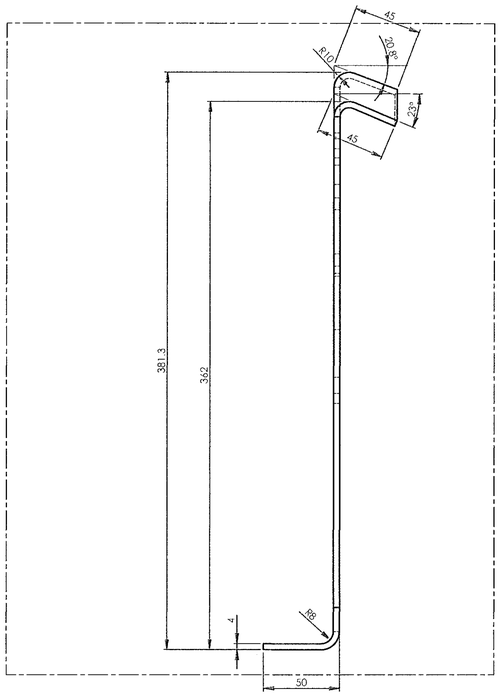

DETAIL X
SCALE 1 : 2

ALL DIMENSIONS ARE IN mm UNLESS OTHERWISE SPECIFIED. FOR UNTOLERANCED DIMENSIONS AND ROUGHNESS VALUES, REFER DRAWING NO ICF/STD-9-0-001.
ANY MANUAL ALTERATION SHALL AUTOMATICALLY RENDER THIS DRAWING INVALID. WELDING SYMBOLS ARE AS PER IS 813-1986. WEIGHT GIVEN IN DRAWING IS FOR INDICATIVE PURPOSE ONLY.

QTY	DESCRIPTION	DIMENSIONS	ITEM NO.	REF. DRGS	MATL.SPEC.	WT/UNIT IN KGS	REMARKS
1	MEMBER	4 x 459 x 2447	1		RDSO/SPEC C-K201 X2 Cr Ni 12	33.743	

GROUP: 1-6 Roof Construction | SURFACE AREA IN Sq.m.: 2.139 | WT/ASSY IN Kgs:

MEMBER

SCALE 1:5	SSE/D	
	CHD	
ALT. a	ALTD	E.SATHISH KUMAR
	DRN	E.SATHISH KUMAR

INDIAN RAILWAY STANDARDS
INTEGRAL COACH FACTORY, CHENNAI - 600038

SHEET 1 OF 1

AAF16122 | **A1**

DATE OF LATEST ALT.	DATE OF FIRST ISSUE	AME/SME
12/01/26	04/09/75	

REF.DRG.NO.

AAF16158

▽ ROUGH MACHINED	(01) ROUGH CLEANED		
▽▽ FINISH MACHINED	(11b) BURRS REMOVED		
▽▽▽ FINE FINISH MACHINED	(18) CHAMFERED		

REVISIONS			
ALT.	ZONE	DESCRIPTION	APPROVED & DATE

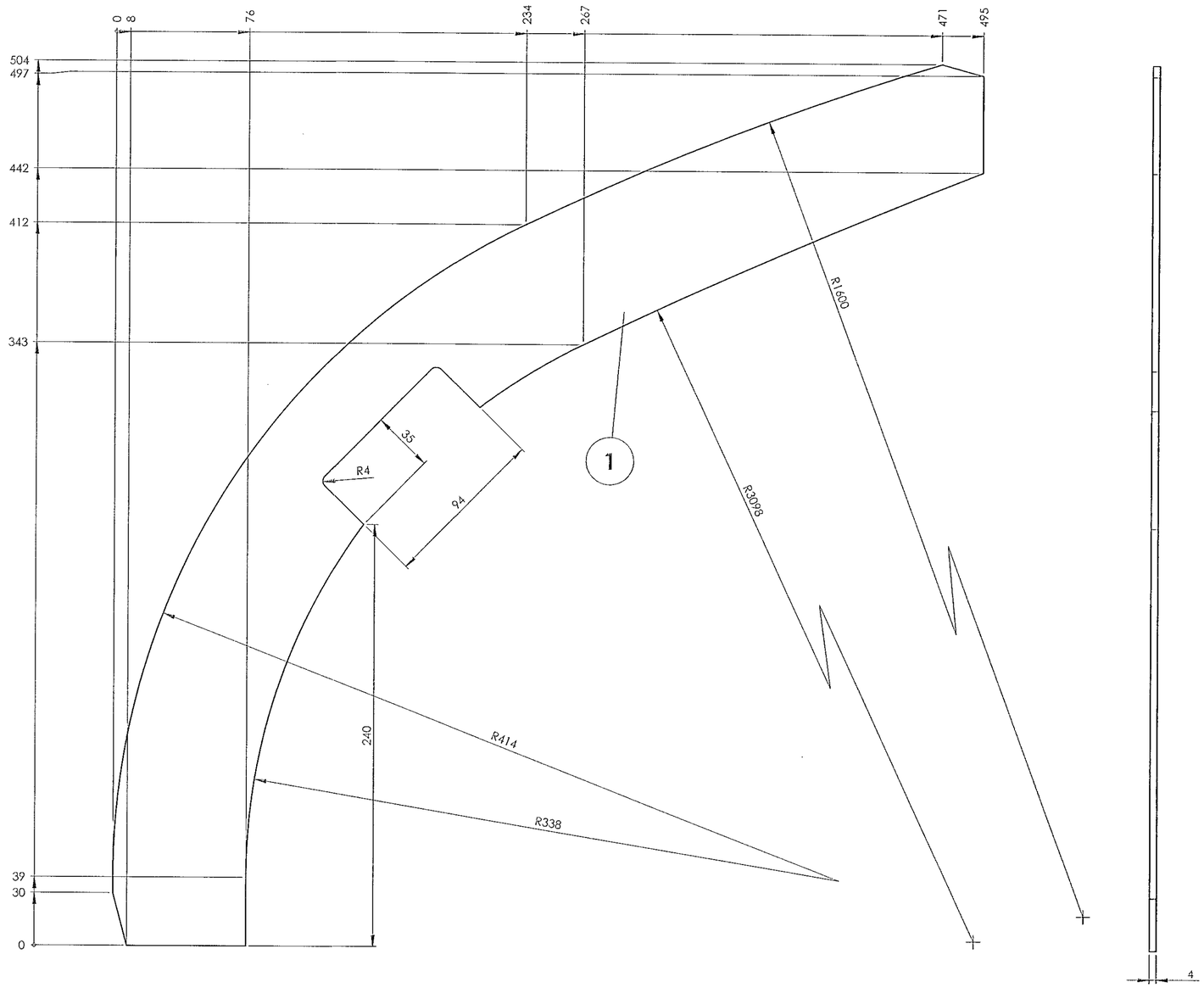

ALL DIMENSIONS ARE IN mm UNLESS OTHERWISE SPECIFIED. FOR UNTOLERANCED DIMENSIONS AND ROUGHNESS VALUES, REFER DRAWING NO ICF/STD-9-0-001.
ANY MANUAL ALTERATION SHALL AUTOMATICALLY RENDER THIS DRAWING INVALID. WELDING SYMBOLS ARE AS PER IS:813-1986.

QTY	DESCRIPTION	DIMENSIONS	ITEM NO.	REF. DRGS	MATL.SPEC.	WT/UNIT IN KGS	REMARKS
1	ROOF ARCH	4 x 495 x 505	1		RDSO/SPEC C-K201 X2CrNi12	1.623	

GROUP: 1-6 Roof Construction | SURFACE AREA IN Sq.m.: 0.108 | WT/ASSY IN Kgs: 1.623

ROOF ARCH

SCALE 1:2	SSE/D	
	CHD	
ALT -	ALTD	
	DRN	E.SATHISH KUMAR

INDIAN RAILWAY STANDARDS
INTEGRAL COACH FACTORY, CHENNAI - 600038

SHEET 1 OF 1

AAF16158 A2

DATE OF LATEST ALT.	DATE OF FIRST ISSUE	AME/SME
	04/09/25	

REF.DRG.NO.2 10113.0.20.210.103

AAF16159

▽ ROUGH MACHINED	(01) ROUGH CLEANED		
▽▽ FINISH MACHINED	(01a) BURRS REMOVED		
▽▽▽ FINE FINISH MACHINED	(16) CHAMFERED		

REVISIONS			
ALT.	ZONE	DESCRIPTION	APPROVED & DATE

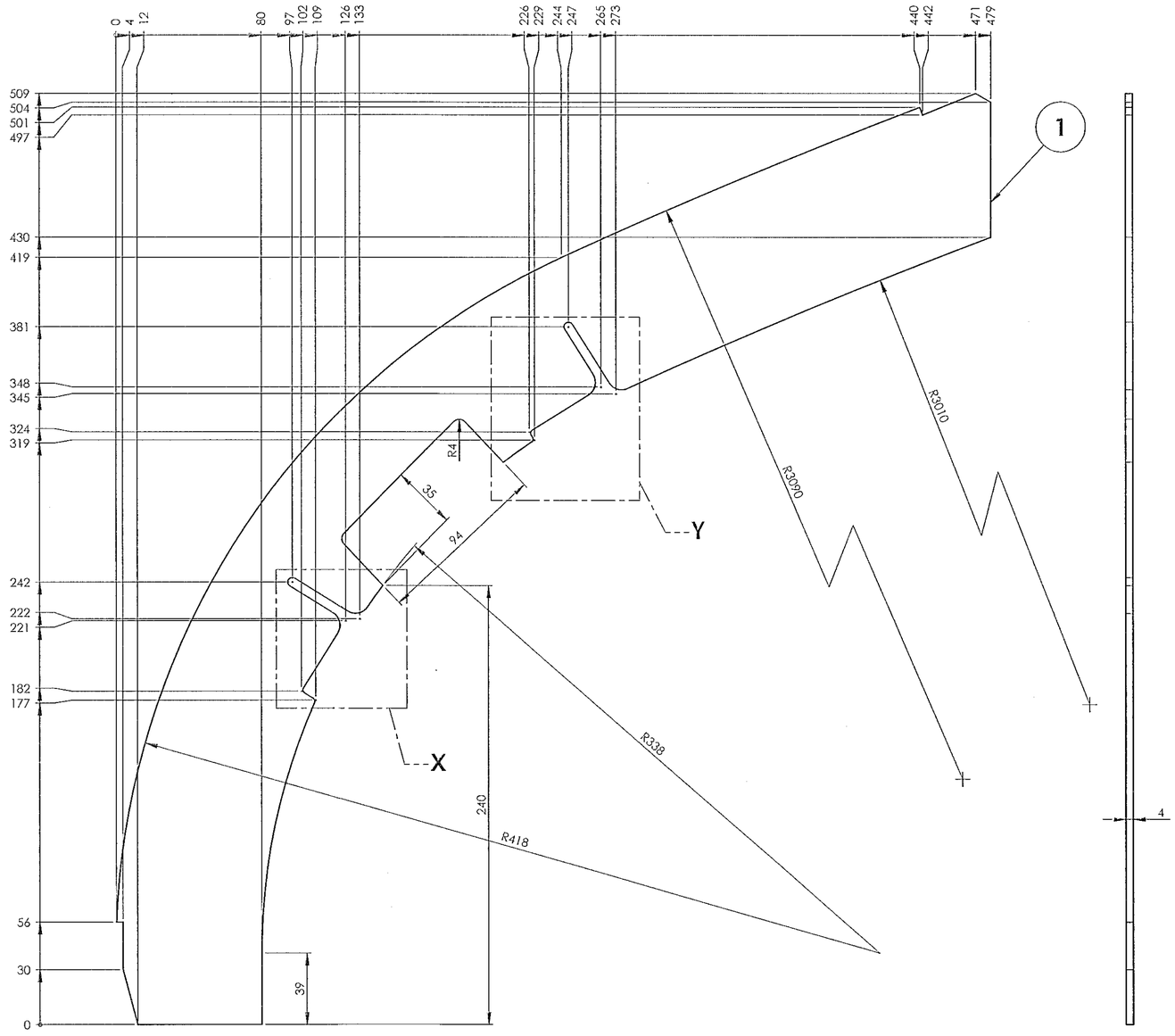

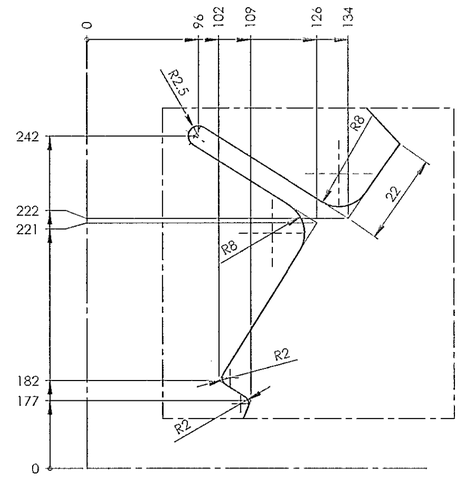

DETAIL X
SCALE 1 : 1

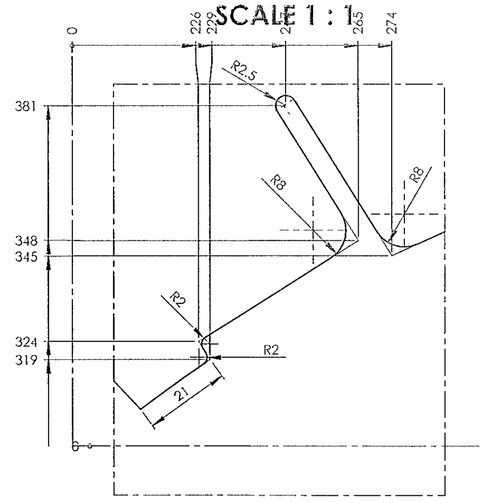

DETAIL Y
SCALE 1 : 1

ALL DIMENSIONS ARE IN mm UNLESS OTHERWISE SPECIFIED. FOR UNTOLERANCED DIMENSIONS AND ROUGHNESS VALUES, REFER DRAWING NO. ICF/STD-9-0-001.
ANY MANUAL ALTERATION SHALL AUTOMATICALLY RENDER THIS DRAWING INVALID. WELDING SYMBOLS ARE AS PER EN ISO 2553. WEIGHT GIVEN IN DRAWING IS FOR INDICATIVE PURPOSE ONLY

QTY	DESCRIPTION	DIMENSIONS	ITEM NO.	REF. DRGS	MATL.SPEC.	WT/UNIT IN KGS	REMARKS
1	ROOF ARCH	4 x 479 x 508.5	1		RDSO/SPEC C-K201 X2CrNi12	1.660	

GROUP: 1-6 Roof Construction | SURFACE AREA IN Sq.m.: 0.111 | WT/ASSY IN Kgs:

ROOF ARCH

SCALE 1:2 | SSE/D | CHD | ALT - | ALTD | DRN | E.SATHISH KUMAR

INDIAN RAILWAY STANDARDS
INTEGRAL COACH FACTORY, CHENNAI - 600038

SHEET 1 OF 1

AAF16159 | A2

REF.DRG.NO.2 10113.0.20.210.112

DATE OF LATEST ALT.	DATE OF FIRST ISSUE	AME/SME
	04/09/25	

AAF16160

▽ ROUGH MACHINED	(01) ROUGH CLEANED
▽▽ FINISH MACHINED	(01b) BURRS REMOVED
▽▽▽ FINE FINISH MACHINED	(18) CHAMFERED

REVISIONS			
ALT.	ZONE	DESCRIPTION	APPROVED & DATE

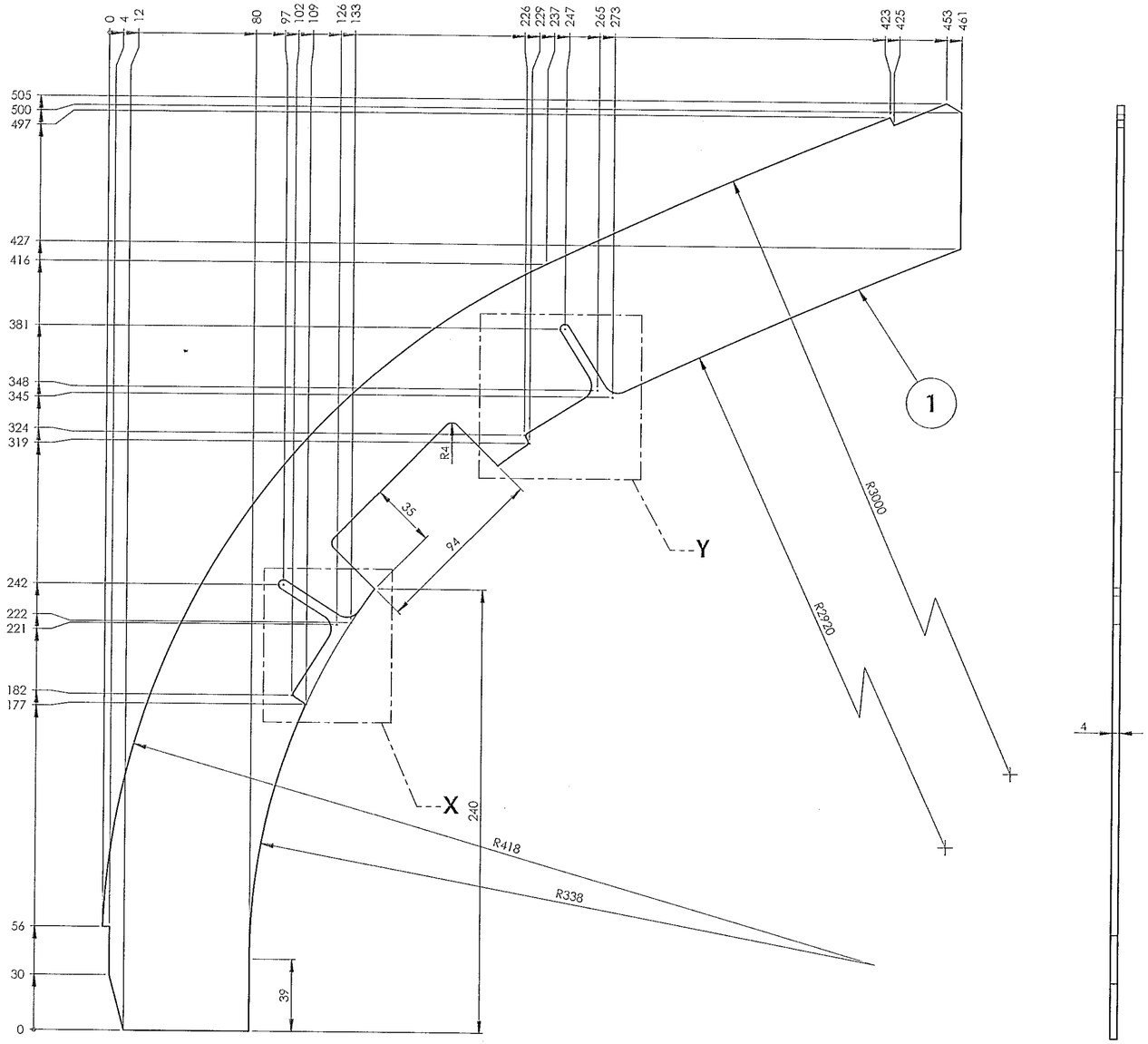

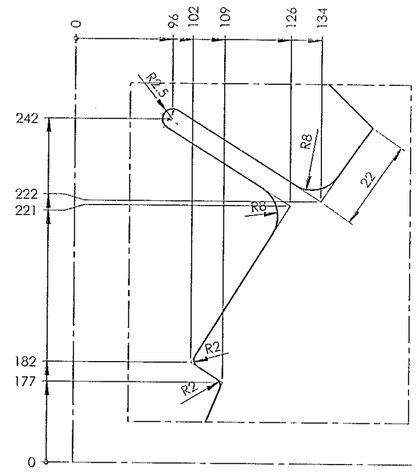

DETAIL X
SCALE 1 : 1

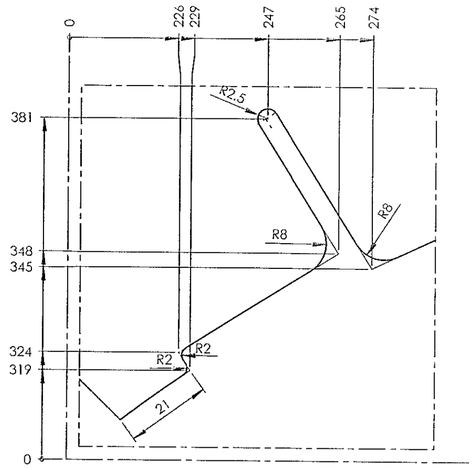

DETAIL Y
SCALE 1 : 1

ALL DIMENSIONS ARE IN mm UNLESS OTHERWISE SPECIFIED. FOR UNTOLERANCED DIMENSIONS AND ROUGHNESS VALUES, REFER DRAWING NO ICF/STD-9-0-001.
ANY MANUAL ALTERATION SHALL AUTOMATICALLY RENDER THIS DRAWING INVALID. WELDING SYMBOLS ARE AS PER EN ISO 2553. WEIGHT GIVEN IN DRAWING IS FOR INDICATIVE PURPOSE ONLY

QTY	DESCRIPTION	DIMENSIONS	ITEM NO.	REF. DRGS	MATL.SPEC.	WT/UNIT IN KGS	REMARKS
1	ROOF ARCH	4 x 462 x 505	1		RDSO/SPEC C-K201 X2CrNi12	1.614	

GROUP: 1-6 Roof Construction

SURFACE AREA IN Sq.m.:0.108

WT/ASSY IN Kgs:

ROOF ARCH

SCALE 1:2	SSE/D	
	CHD	
ALT -	ALTD	
	DRN	E.SATHISH KUMAR

INDIAN RAILWAY STANDARDS
INTEGRAL COACH FACTORY, CHENNAI - 600038

SHEET 1 OF 1

AAF16160 A2

DATE OF LATEST ALT.	DATE OF FIRST ISSUE	AME/SME
	04/09/25	

REF.DRG.NO.

AAF16161

▽ ROUGH MACHINED	(01) ROUGH CLEANED
▽▽ FINISH MACHINED	(01b) BURRS REMOVED
▽▽▽ FINE FINISH MACHINED	(18) CHAMFERED

REVISIONS			
ALT.	ZONE	DESCRIPTION	APPROVED & DATE

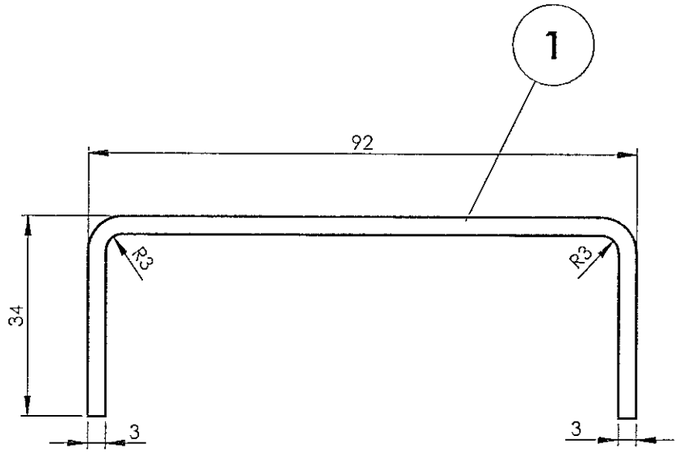

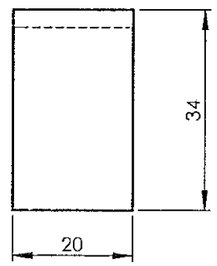

ALL DIMENSIONS ARE IN mm UNLESS OTHERWISE SPECIFIED. FOR UNTOLERANCED DIMENSIONS AND ROUGHNESS VALUES, REFER DRAWING NO ICF/STD-9-0-001.
ANY MANUAL ALTERATION SHALL AUTOMATICALLY RENDER THIS DRAWING INVALID. WELDING SYMBOLS ARE AS PER EN ISO 2553.
WEIGHT GIVEN IN DRAWING IS FOR INDICATIVE PURPOSE ONLY

QTY	DESCRIPTION	DIMENSIONS	ITEM NO.	REF. DRGS	MATL.SPEC.	WT/UNIT IN KGS	REMARKS
1	BACK PIECE	3x20x148	1		RDSO SPEC C-K201 X2 Cr Ni 12	0.07	

GROUP: 1-6 Roof Construction

SURFACE AREA IN Sq.m.:

WT/ASSY IN Kgs:

BACK PIECE

SCALE 1:1	SSE/D	
	CHD	
ALT. -	ALTD	
	DRN	VIJAYAKUMAR R

INDIAN RAILWAY STANDARDS

INTEGRAL COACH FACTORY, CHENNAI - 600038

SHEET 1 OF 1

AAF16161 A3

REF.DRG.NO.-

DATE OF LATEST ALT.	DATE OF FIRST ISSUE	AME/SME
-	04/09/25	

AAF16201

▽ ROUGH MACHINED	(01) ROUGH CLEANED
▽▽ FINISH MACHINED	(01e) BURRS REMOVED
▽▽▽ FINE FINISH MACHINED	(18) CHAMFERED

REVISIONS			
ALT.	ZONE	DESCRIPTION	APPROVED & DATE

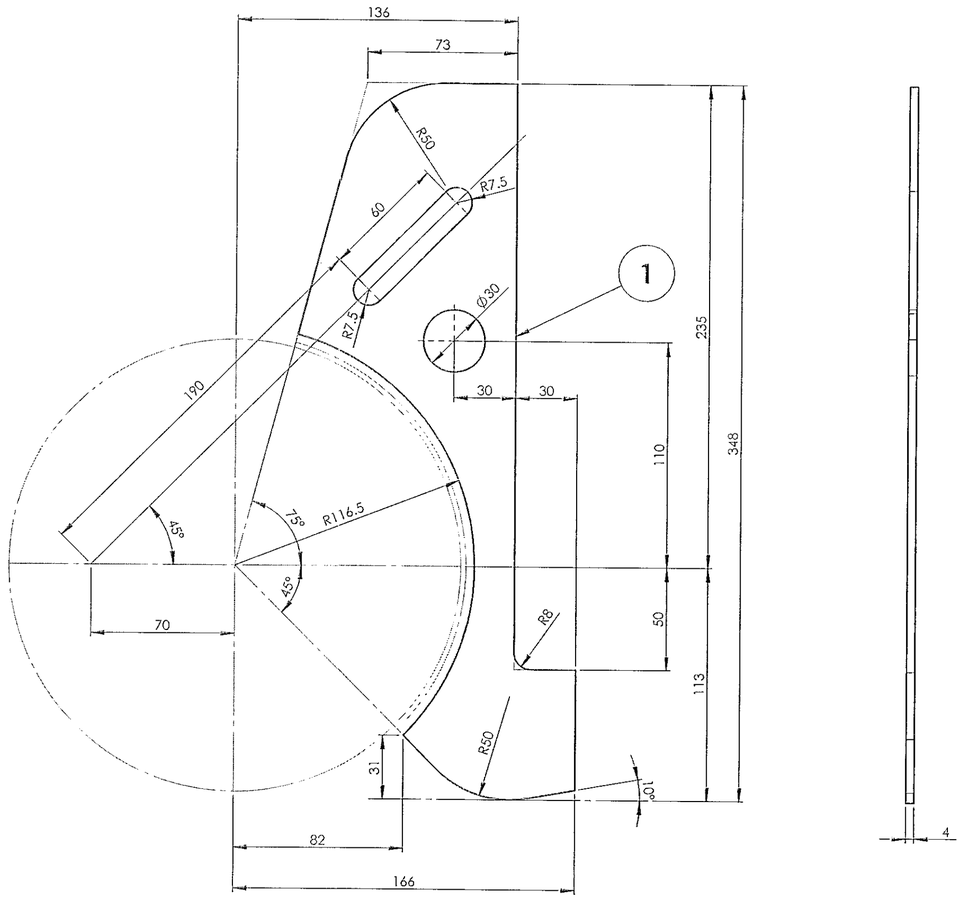

ALL DIMENSIONS ARE IN mm UNLESS OTHERWISE SPECIFIED. FOR UNTOLERANCED DIMENSIONS AND ROUGHNESS VALUES, REFER DRAWING NO ICF/STD-9-0-001.
ANY MANUAL ALTERATION SHALL AUTOMATICALLY RENDER THIS DRAWING INVALID. WELDING SYMBOLS ARE AS PER IS:813-1986. WEIGHT GIVEN IN DRAWING IS FOR INDICATIVE PURPOSE ONLY

QTY	DESCRIPTION	DIMENSIONS	ITEM NO.	REF. DRGS	MATL.SPEC.	WT/UNIT IN KGS	REMARKS
1	PLATE	4 x 136 x 348	1		RDSO/SPEC C-K201 X2CrNi12	0.610	

GROUP: 1-6 Roof Construction

SURFACE AREA IN Sq.m.: 0.043

WT/ASSY IN Kgs:

PLATE

SCALE 1:2	SSE/D	
	CHD	
ALT -	ALTD	
	DRN	E.SATHISH KUMAR

INDIAN RAILWAY STANDARDS
INTEGRAL COACH FACTORY, CHENNAI - 600038

SHEET 1 OF 1

AAF16201 A2

DATE OF LATEST ALT.	DATE OF FIRST ISSUE	AME/SME
	04/09/25	

REF.DRG.NO.-

AAF16202

▽ ROUGH MACHINED	(01) ROUGH CLEANED		
▽▽ FINISH MACHINED	(01e) BURRS REMOVED		
▽▽▽ FINE FINISH MACHINED	(18) CHAMFERED		

REVISIONS			
ALT.	ZONE	DESCRIPTION	APPROVED & DATE

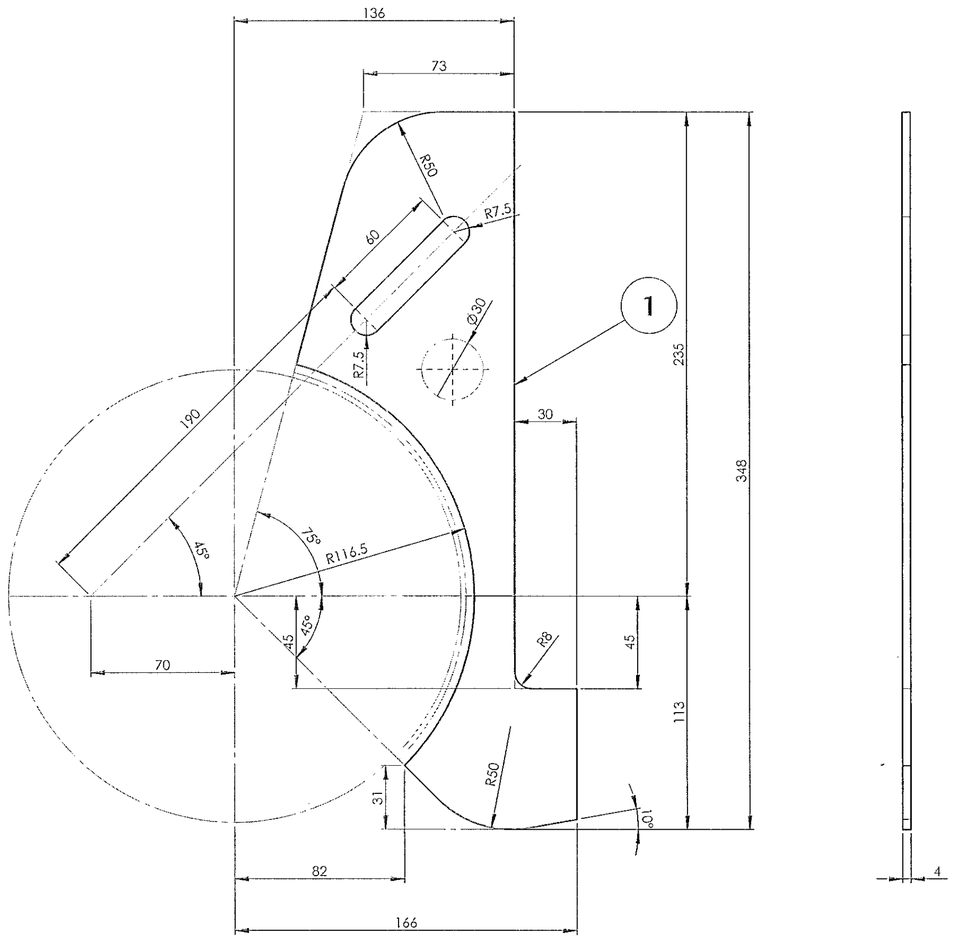

ALL DIMENSIONS ARE IN mm UNLESS OTHERWISE SPECIFIED. FOR UNTOLERANCED DIMENSIONS AND ROUGHNESS VALUES, REFER DRAWING NO. ICF/STD-9-0-001.
ANY MANUAL ALTERATION SHALL AUTOMATICALLY RENDER THIS DRAWING INVALID. WELDING SYMBOLS ARE AS PER IS:813-1986.

QTY	DESCRIPTION	DIMENSIONS	ITEM NO.	REF. DRGS	MATL.SPEC.	WT/UNIT IN KGS	REMARKS
1	PLATE	4 x 136 x 348	1		RDSO/SPEC C-K201 X2CrNi12	0.637	

GROUP: 1-6 Roof Construction | SURFACE AREA IN Sq.m.: 0.044 | WT/ASSY IN Kgs: 0.715

PLATE

SCALE 1:2 | SSE/D | CHD | ALT - | ALTD | DRN: E.SATHISH KUMAR

INDIAN RAILWAY STANDARDS
INTEGRAL COACH FACTORY, CHENNAI - 600038

SHEET 1 OF 1

AAF16202 | A2

REF.DRG.NO.-

DATE OF LATEST ALT.	DATE OF FIRST ISSUE	AME/SME
	04/09/25	

S.No 3280

Government of India Ministry of Railways
Research Designs & Standards Organisation
Lucknow - 226 011
DID (0522) 2450115
DID (0522) 2465310

MC/STEEL

Date: 18.11.2013

Chief Mechanical Engineer,

1. Central Railway, Chhatrapati Shivaji Terminus, Mumbai - 400 001
2. Eastern Railway, Fairlie Place, Kolkata - 700 001
3. Northern Railway, Baroda House, New Delhi - 110 001
4. North Eastern Railway, Gorakhpur - 273 001
5. Northeast Frontier Railway, Maligaon, Guwahati - 781 011
6. Southern Railway, Park Town, Chennai - 600 003
7. South Central Railway, Rail Nilayam, Secunderabad - 500 071
8. South Eastern Railway, Garden Reach, Kolkata - 700 043
9. Western Railway, Churchgate, Mumbai - 400 020
10. East Central Railway, Hajipur - 844 101
11. East Coast Railway, Chandrasekharpur, Bhubaneswar - 751 016
12. North Central Railway, Allahabad - 211 001
13. North Western Railway, Jaipur - 302 006
14. South East Central Railway, Bilaspur - 495 004
15. South Western Railway, Hubli - 580 023
16. West Central Railway, Jabalpur - 482 008
17. Rail Coach Factory, Hussainpura, Kapurthala-144 602
18. Integral Coach Factory, Chennai – 600 038.

Sub: Amendment No. 1 of November 2013 to RDSO specification No. C-K201 for stainless steel sheets/plates for coaches of Indian Railways.

Ref: CDE's meeting held at ICF-Chennai on 15.12.2012

Railways and PUs are regularly procuring 1.7 mm thick stainless steel sheets to RDSO specification No. C-K 201.The permissible thickness deviation for 1.7mm stainless steel sheet was not specified in the table of clause no. 1.1 of Annexure-1 of RDSO specification No. C-K 201 mentioned under as Table-A. To include the permissible thickness deviation of 1.7 mm stainless steel sheet in the table of clause no. 1.1 of Annexure-1 of RDSO specification No. C-K 201 it has been decided to amend the RDSO specification No. C-K 201.

Table-A

Nominal thickness (mm)	Permissible thickness deviation (+/-mm)	Upper deviation in the normal width	Upper deviation in normal length.
1 & 1.25mm	0.06	1.5 mm	10 mm
2.00 mm	0.075	2 mm	10 mm
2.50 & 3 mm	0.10	2 mm	10 mm
4.00 mm	0.13	2 mm	10 mm
5 & 6 MM	0.20	5 MM	15 MM

As per Note (3) of table A 3.5 of ASTM A480/A480M-13 "For specified thickness other than those shown, the tolerances for the next higher thickness shall apply". Based on this, permissible thickness deviation of 1.7 mm stainless steel sheet has been clubbed with 2.00 mm in RDSO specification No. C-K 201.

The above table amended as below and nominal thickness of 1.7mm stainless steel sheet has been clubbed with the dimensional tolerances of 2.00 mm thick stainless steel sheet.

Table-B

Nominal thickness (mm)	Permissible thickness deviation (+/-mm)	Upper deviation in the normal width	Upper deviation in normal length.
1 & 1.25mm	0.06	1.5 mm	10 mm
1.7 & 2.00 mm	**0.075**	**2 mm**	**10 mm**
2.50 & 3 mm	0.10	2 mm	10 mm
4.00 mm	0.13	2 mm	10 mm
5 & 6 MM	0.20	5 MM	15 MM

The Amendment No. 1 of November 2013 to RDSO specification No. C-K 201 can also be browsed at RDSO website through following link.
http://www.rdso.indianrailways.gov.in → Carriage Directorate → Specification → Draft specification for comments

It is requested to send your valuable comments on draft amendment No. 1 of November 2013 to RDSO specification No. C-K 201 enclosed as Annexure-A at the earliest.

18/11/2013

DA: As above

(Deependra Kumar)
Director/Std./ Carriage
For Director General (Carriage)

Copy to:

EDME (Coaching),
Rail Bhawan,
Railway Board, New Delhi- For kind comments on draft amendment No. 1 of November 2013 to RDSO specification No. C-K 201.

DA: As above

18/11/2013

(Deependra Kumar)
Director/Std./ Carriage
For Director General (Carriage)

S/C

Annexure-A

Amendment No. 1 of November 2013 to RDSO Specification No. C-K 201 for Stainless Steel Sheets /Plates for Coaches of Indian Railways.

Table of the clause No. 1.1 of Annexure-1 of the specification to be read as follows:

Nominal thickness (mm)	Permissible thickness deviation (+/-mm)	Upper deviation in the normal width	Upper deviation in normal length.
1 & 1.25mm	0.06	1.5 mm	10 mm
1.7 & 2.00 mm	0.075	2 mm	10 mm
2.50 & 3 mm	0.10	2 mm	10 mm
4.00 mm	0.13	2 mm	10 mm
5 & 6 MM	0.20	5 MM	15 MM

Annexure-B

Comments of manufacturers of steel on Amendment No. 1 of November 2013 to RDSO Specification No. C-K 201 for Stainless Steel Sheets /Plates for Coaches of Indian Railways.

S. No.	Amendment No. 1 of November 2013 to RDSO Specification No. C-K 201 for Stainless Steel Sheets /Plates for Coaches of Indian Railways.	Comments of M/s Salem Steel Plant.	Comments of M/s Jindal Stainless Limited, Hisar.	RDSO's Remarks
1.	Table of the clause 1.1 of Annexure-1 of the specification to be read as follows: Nominal thickness (mm) / Permissible thickness deviation (+/-mm) / Upper deviation in the normal width / Upper deviation in normal length. 1 & 1 25mm / 0 06 / 1 5 mm / 10 mm 1.7 & 2.00 mm / 0.075 / 2 mm / 10 mm 2 50 & 3 mm / 0 10 / 2 mm / 10 mm 4 00 mm / 0 13 / 2 mm / 10 mm 5 & 6 mm / 0 20 / 5 mm / 15 mm	This has reference to your email dated 18.11.2013 on the above subject, it is possible to implement the amendment No. 1 as proposed in your message	Noted the point indicated by you. This is also OK with us if 1.7mm thick is included with 2.0 mm.	1. M/s Salem steel plant comments are in line to the proposed amendment No.1 hence is acceptable. 2. M/s Jindal stainless Limited comments are in line to the proposed amendment No 1 hence is acceptable.

Annexure-C

Amendment No. 1 of December 2013 to RDSO Specification No. C-K 201 for Stainless Steel Sheets /Plates for Coaches of Indian Railways.

Table of the clause No. 1.1 of Annexure-1 of the specification to be read as follows:

Nominal thickness (mm)	Permissible thickness deviation (+/-mm)	Upper deviation in the normal width	Upper deviation in normal length.
1 & 1.25mm	0.06	1.5 mm	10 mm
1.7 & 2.00 mm	**0.075**	**2 mm**	**10 mm**
2.50 & 3 mm	0.10	2 mm	10 mm
4.00 mm	0.13	2 mm	10 mm
5 & 6 MM	0.20	5 MM	15 MM

SD(M)/02/869
28/04/2014

फैक्स/Fax : 91-0522-458500
तार : 'रेलमानक' लखनऊ
Telegram : 'RAILMANAK', Lucknow
टेलीफोन/Tele : 451200 (PBX)
450567 (DID)

14

भारत सरकार - रेल मंत्रालय
अनुसंधान अभिकल्प और मानक संगठन
लखनऊ - 226011
Government of India-Ministry of Railways
Research Designs & Standards Organisation
Lucknow - 226011

Accredited by the RvA
ISO 9001 REGISTERED ORGANISATION
DNV Certification B.V. THE NETHERLANDS

सत्यमेव जयते
मु. अ. इं. / यांत्रिक का कार्यालय
Office of the CDE / Mech.
14 FEB 2002
226/A
स. डि. का, चेन्नै-600 038
I C F, CHENNAI-600 038

Note No. MC/STN/STL

Date : 21.01.2002 23/1

CDE/M.

The General Manager (Mech)

1. Central Railway, Mumbai CST, Mumbai - 400 001.
2. Eastern Railway, Fairlie Place, Kolkata- 700 001.
3. Northern Railway, Baroda House, New Delhi- 110 001.
4. North Eastern Railway, Gorakhpur – 273 011.
5. Northeast Frontier Railway, Maligaon, Guwahati- 11.
6. Southern Railway, Park Town, Chennai- 600 003.
7. South Central Railway, Rail Nilayam, Secundrabad- 500 371.
8. South Eastern Railway, Garden Reach, Kolkata – 700 043.
9. Western Railway, Churchgate, Mumbai- 400 020.
10. Integral Coach Factory, Chennai – 600 038
11. Rail Coach Factory, Kapoorthala –144 602
12. M/s BEML, Bangalore Complex, New Thippasandra, P.B.No.7501, Bangalore – 560 075.

Sub : Specification for Stainless steel sheets/plates for coaches of Indian Railways.

Please find enclosed on copy of the specification C-K201 for stainless steel sheets / plates for coaches of Indian Railways for your information and necessary action.

DA : As above

(Amitabh Sinha)
For Director General/Carriage

Copy to :-

1) M/s Essar Steel Ltd., 27th KM Surat Hazira Road, Hazira-394 270 Distt. Surat
2) M/s.Lloyds Steel Industries (Steel Division), Wardha-422001(Maharashtra).
3) M/s.Ispat Industries Ltd., Geetpuram, Dolvi Taluka-Pen, Distt. Raigarh 402107(Maharashtra).
4) M/s.Tata Iron & Steel Company Ltd., Jamshedpur-831001(Jharkhand).
5) M/s.Steel Authority of India, Bokaro Steel Plant, Bokaro (Jharkhand).
6) M/s. Salem Steel Plant, Regional Marketing Office, Antriksh Bhawan, 11th Floor, 22- Kasturba Gandhi Marg, New Delhi-110 001

(Amitabh Sinha)
For Director General/Carriage

Reg. no 2
1280
24/2

C-K201

SPECIFICATION FOR STAINLESS STEEL SHEETS / PLATES FOR COACHES OF INDIAN RAILWAYS

Rec'd vide RDSO letter no C/STN/STL dt 23/1/02

JANUARY, 2002

22.1.02

ISSUED BY

RESEARCH DESIGNS AND STANDARDS ORGANISATION
MINISTRY OF RAILWAYS
MANAK NAGAR
LUCKNOW – 226011

Reg no: 002
Sl no: 1280
22/2

Price : _____

INDEX

S.No.	Description	Page No.
1.	Foreword	1
2.	Scope	1
3.	Manufacture	1
4.	Freedom from defects	2
5.	Conditions of supply	2
6.	Chemical composition	3
7.	Mechanical properties	3
8.	Location of test pieces	4
9.	Retest	4
10.	Dimensional tolerances	5
11.	Surface finish	5
12.	Weldability	5
13.	Corrosion resistance	5
14.	Inspection	6
15	Marking	6
16.	Protection and packing	7
17.	Heat treatment	7
18.	Annexure-I	8
19.	Annexure-II	9
20.	Annexure-III	12
21.	Tables	16