Signature Not Verified
Digitally signed by MANOJ KUMAR
Date: 2026.06.02 03:27:53 IST
Reason: IREPS Document
Location: IREPS-CRIS

AAA16923

▽ ROUGH MACHINED	(C) ROUGH CLEANED
▽▽ FINISH MACHINED	(B) BURRS REMOVED
▽▽▽ FINE FINISH MACHINED	(B) CHAMFERED

REVISIONS			
ALT.	ZONE	DESCRIPTION	APPROVED & DATE

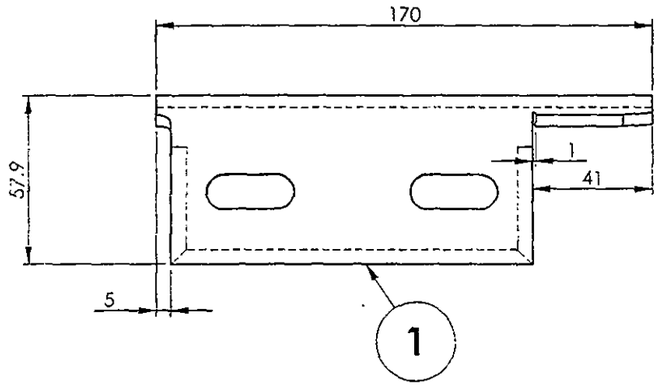

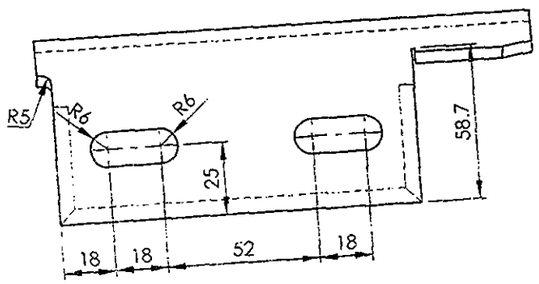

VIEW X

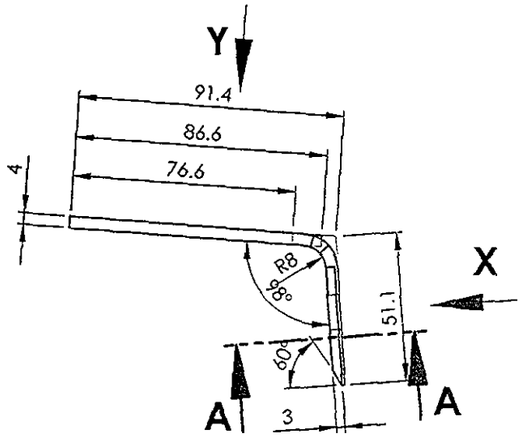

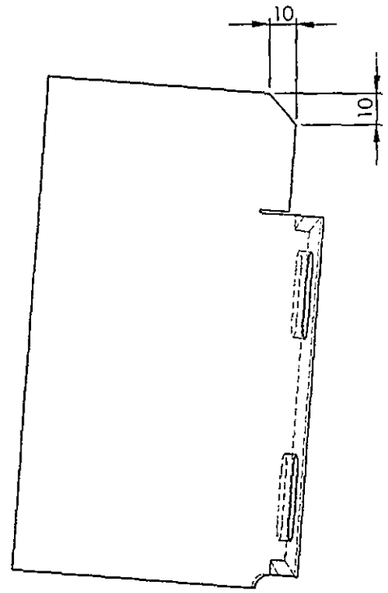

VIEW Y

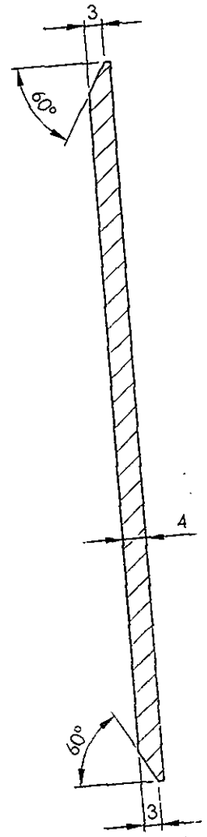

SECTION A-A
SCALE 1 : 1

ALL DIMENSIONS ARE IN mm UNLESS OTHERWISE SPECIFIED. FOR UNTOLERANCED DIMENSIONS AND ROUGHNESS VALUES, REFER DRAWING NO ICF/STD-9 0 001.
ANY MANUAL ALTERATION SHALL AUTOMATICALLY RENDER THIS DRAWING INVALID. WELDING SYMBOLS ARE AS PER IS: 813-1986.

REF.DRG.NO.3 10113.20.200.113

DATE OF LATEST ALT.	DATE OF FIRST ISSUE	AME/SME
	21-03-2013	

QTY.	DESCRIPTION	DIMENSIONS	ITEM NO.	REF. DRGS	MATL.SPEC.	WT/UNIT IN KGS	REMARKS
1	STIFFENING ANGLE	4 x 136 x 170	1		RDSO/SPEC C-K201 X2 Cr Ti 12	0.631	

GROUP: 1-6 ROOF ASSEMBLY | SURFACE AREA IN Sq.m.:0.043 | WT/ASSY IN Kgs:0.631

STIFFENING ANGLE

SCALE 1:2	SSE/D	
	CHD	
ALT.	ALTD	
	DRN	K.Sriram

INDIAN RAILWAY STANDARDS
INTEGRAL COACH FACTORY, CHENNAI - 600038

SHEET 1 OF 1

AAA16923 A3

AAA16924

▽ ROUGH MACHINED	ROUGH CLEANED
▽▽ FINISH MACHINED	BURRS REMOVED
▽▽▽ FINE FINISH MACHINED	CHAMFERED

REVISIONS			
ALT.	ZONE	DESCRIPTION	APPROVED & DATE

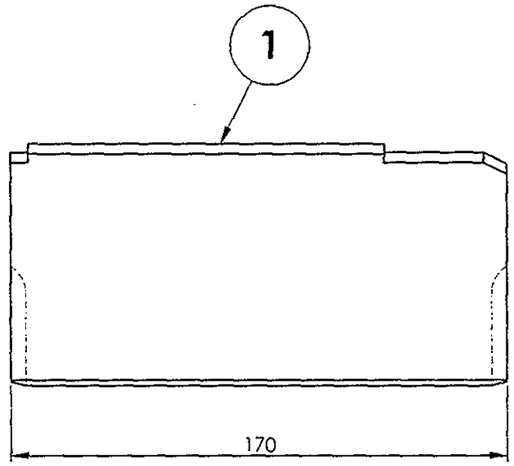

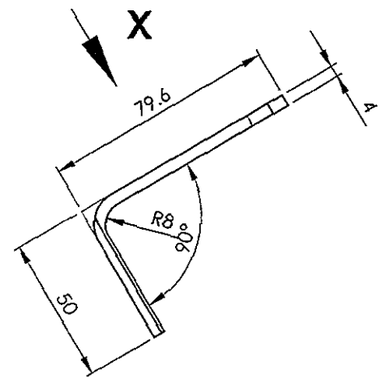

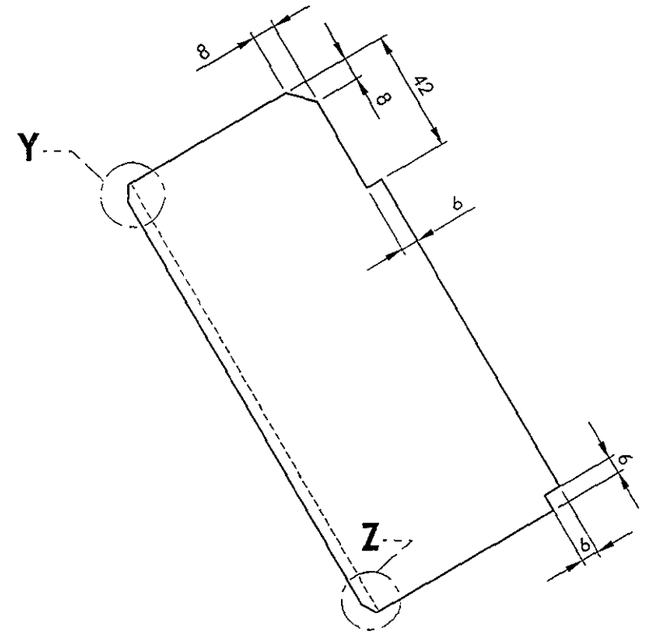

VIEW X

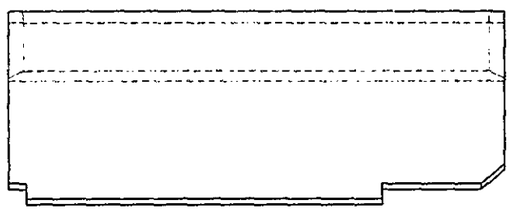

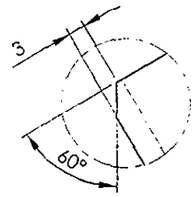

DETAIL Y
SCALE 1 : 1

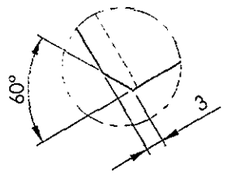

DETAIL Z
SCALE 1 : 1

ALL DIMENSIONS ARE IN mm UNLESS OTHERWISE SPECIFIED. FOR UNTOLERANCED DIMENSIONS AND ROUGHNESS VALUES, REFER DRAWING NO ICF/STD 9 0.001.
ANY MANUAL ALTERATION SHALL AUTOMATICALLY RENDER THIS DRAWING INVALID. WELDING SYMBOLS ARE AS PER IS: 813-1986.

REF.DRG.NO.3 10113.20.200.115

QTY.	DESCRIPTION	DIMENSIONS	ITEM NO.	REF. DRGS	MATL.SPEC.	WT/UNIT IN KGS	REMARKS
1	STIFFENING ANGLE	4 x 121 x 170	1		RDSO/SPEC C-K201 X2CrNi12	0.644	

GROUP: 1-6 ROOF ASSEMBLY | SURFACE AREA IN Sq.m.:0.043 | WT/ASSY IN Kgs:0.644

STIFFENING ANGLE

SCALE 1:2	SSE/D	
	CHD	
ALT.	ALTD	
	DRN	K.Sriram

INDIAN RAILWAY STANDARDS
INTEGRAL COACH FACTORY, CHENNAI - 600038

SHEET 1 OF 1

AAA16924 A3

DATE OF LATEST ALT.	DATE OF FIRST ISSUE	AME/SME
	21-03-2013	

AAA16926

▽ ROUGH MACHINED	(60) ROUGH CLEANED
▽▽ FINISH MACHINED	(61) BURRS REMOVED
▽▽▽ FINE FINISH MACHINED	(18) CHAMFERED

REVISIONS			
ALT.	ZONE	DESCRIPTION	APPROVED & DATE

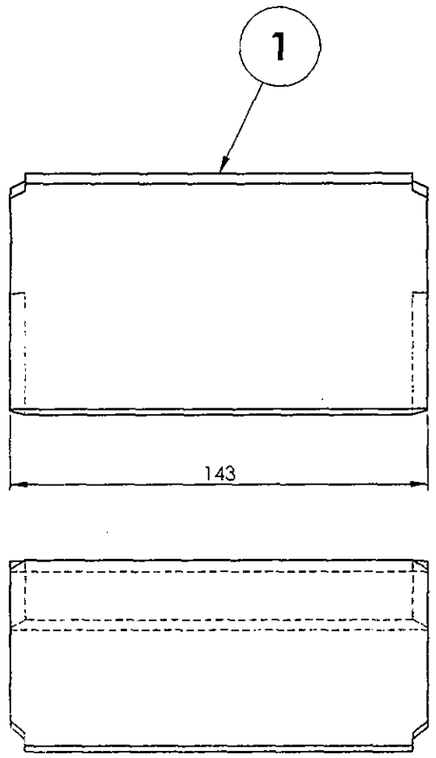

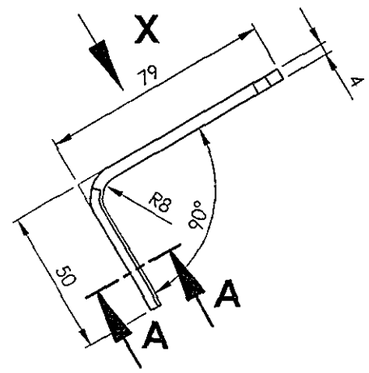

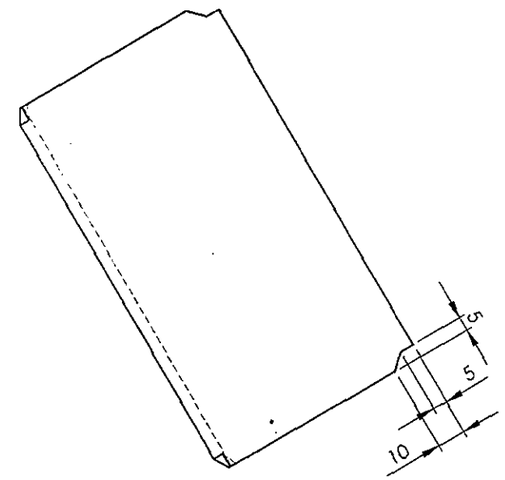

VIEW X

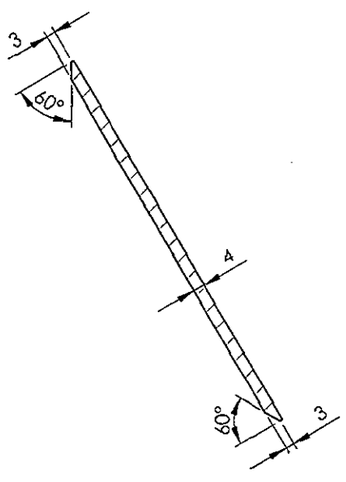

SECTION A-A

ALL DIMENSIONS ARE IN mm UNLESS OTHERWISE SPECIFIED. FOR UNTOLERANCED DIMENSIONS AND ROUGHNESS VALUES, REFER DRAWING NO ICF/SID 9 0 001.
ANY MANUAL ALTERATION SHALL AUTOMATICALLY RENDER THIS DRAWING INVALID. WELDING SYMBOLS ARE AS PER IS: 813-1986.

REF.DRG.NO.3 10113.0.20.200.123

QTY.	DESCRIPTION	DIMENSIONS	ITEM NO.	REF. DRGS	MATL.SPEC.	WT/UNIT IN KGS	REMARKS
1	STIFFENING ANGLE	4 x 121 x 143	1		RDSO/SPEC C-K201 X2CrNi12	0.544	

GROUP: 1-6 ROOF ASSEMBLY | SURFACE AREA IN Sq.m.:0.036 | WT/ASSY IN Kgs:0.544

STIFFENING ANGLE

SCALE 1:2	SSE/D	
	CHD	
ALT.	ALTD	
	DRN	K.Sriram

DATE OF LATEST ALT.	DATE OF FIRST ISSUE	AME/SME
	21-03-2013	

INDIAN RAILWAY STANDARDS

INTEGRAL COACH FACTORY, CHENNAI - 600038

SHEET 1 OF 1

AAA16926 A3

AAA16927

▽ ROUGH MACHINED	ROUGH CLEANED
▽▽ FINISH MACHINED	BURRS REMOVED
▽▽▽ FINE FINISH MACHINED	CHAMFERED

REVISIONS			
ALT.	ZONE	DESCRIPTION	APPROVED & DATE

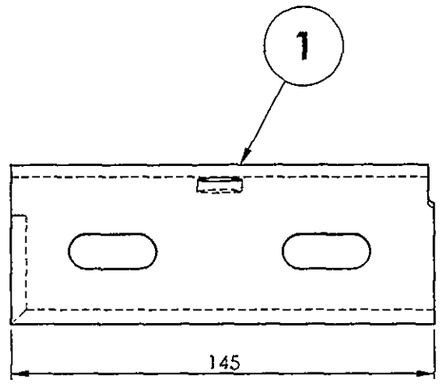

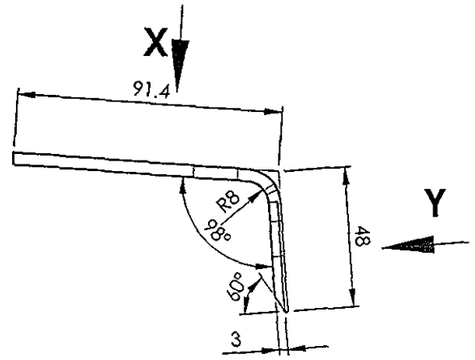

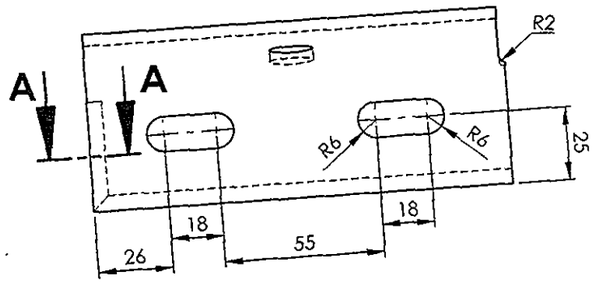

VIEW Y

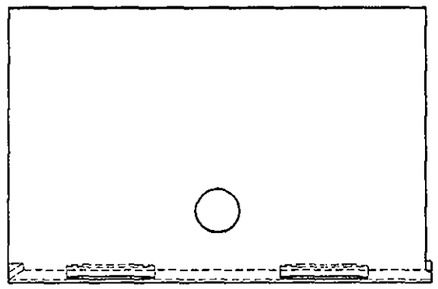

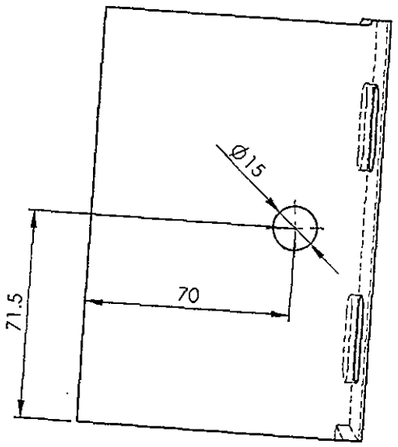

VIEW X

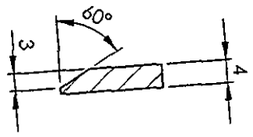

SECTION A-A
SCALE 1 : 1

ALL DIMENSIONS ARE IN mm UNLESS OTHERWISE SPECIFIED. FOR UNTOLERANCED DIMENSIONS AND ROUGHNESS VALUES, REFER DRAWING NO ICF/STD-9-0-001.
ANY MANUAL ALTERATION SHALL AUTOMATICALLY RENDER THIS DRAWING INVALID. WELDING SYMBOLS ARE AS PER IS: 813-1986.

REF.DRG.NO.3 10113.0.20.200.125

QTY.	DESCRIPTION	DIMENSIONS	ITEM NO.	REF. DRGS	MATL.SPEC.	WT/UNIT IN KGS	REMARKS
1	STIFFENING ANGLE	4 x 135 x 145	1		RDSO/SPEC C-K201 X2CrNi12	0.573	

GROUP: 1-6 ROOF ASSEMBLY | SURFACE AREA IN Sq.m.:0.039 | WT/ASSY IN Kgs:0.573

STIFFENING ANGLE

SCALE 1:2	SSE/D	
	CHD	
ALT.	ALTD	
	DRN	K.Sriram

DATE OF LATEST ALT.	DATE OF FIRST ISSUE	AME/SME
	21-03-2013	

INDIAN RAILWAY STANDARDS
INTEGRAL COACH FACTORY, CHENNAI - 600038

SHEET 1 OF 1

AAA16927 A3

AAA16929

▽ ROUGH MACHINED	ROUGH CLEANED
▽▽ FINISH MACHINED	BURRS REMOVED
▽▽▽ FINE FINISH MACHINED	CHAMFERED

REVISIONS			
ALT.	ZONE	DESCRIPTION	APPROVED & DATE

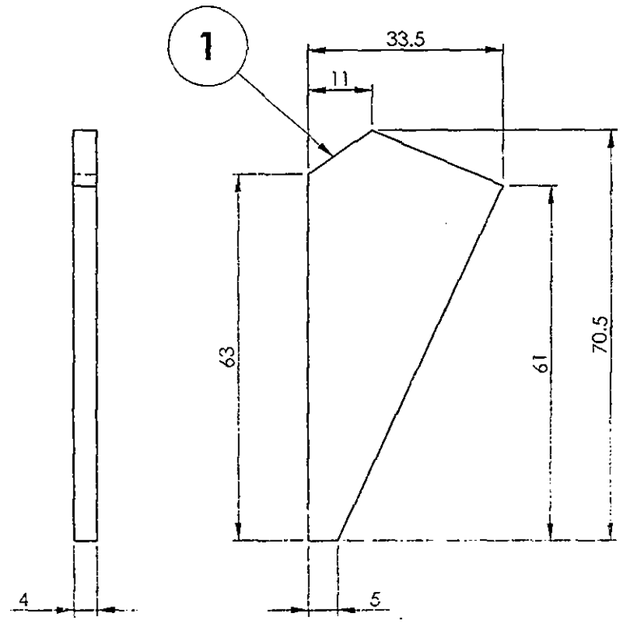

ALL DIMENSIONS ARE IN mm UNLESS OTHERWISE SPECIFIED. FOR UNTOLERANCED DIMENSIONS AND ROUGHNESS VALUES, REFER DRAWING NO ICF/STD 9.0.001.
ANY MANUAL ALTERATION SHALL AUTOMATICALLY RENDER THIS DRAWING INVALID. WELDING SYMBOLS ARE AS PER IS: 813-1986.

REF.DRG.NO.4 10113.0.20.200.138

QTY.	DESCRIPTION	DIMENSIONS	ITEM NO.	REF. DRGS	MATL.SPEC.	WT/UNIT IN KGS	REMARKS
1	RIB	4 x 33.5 x 70.5	1		RDSO/SPEC C-K201 X2 Cr Ni 12	0.043	

GROUP: 1-6 ROOF ASSEMBLY | SURFACE AREA IN Sq.m.:0.003 | WT/ASSY IN Kgs:0.043

RIB

SCALE 1:1	SSE/D	
	CHD	
ALT.	ALTD	
	DRN	K.Sriram

DATE OF LATEST ALT.	DATE OF FIRST ISSUE	AME/SME
	21-03-2013	

INDIAN RAILWAY STANDARDS

INTEGRAL COACH FACTORY, CHENNAI - 600038

SHEET 1 OF 1

AAA16929 A3

AAA16932

▽ ROUGH MACHINED	(01) ROUGH CLEANED
▽▽ FINISH MACHINED	(01B) BURRS REMOVED
▽▽▽ FINE FINISH MACHINED	(18) CHAMFERED

REVISIONS

ALT.	ZONE	DESCRIPTION	APPROVED & DATE

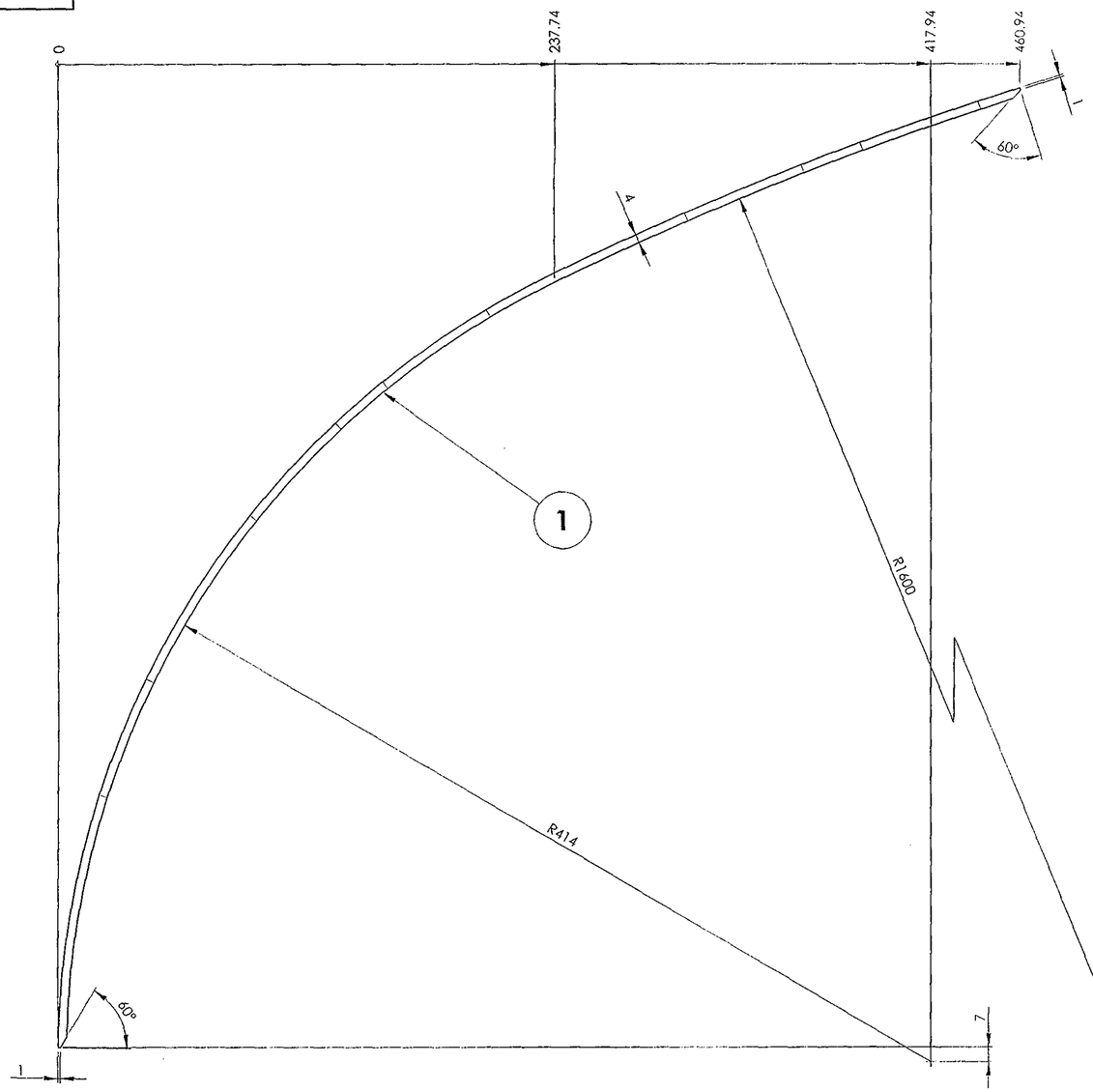

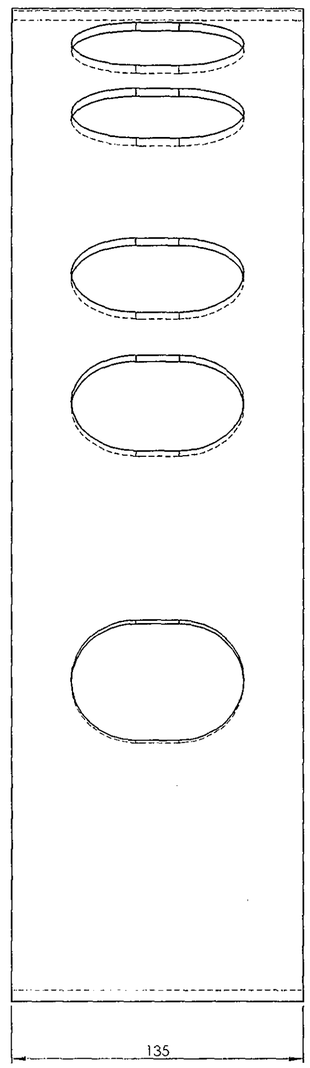

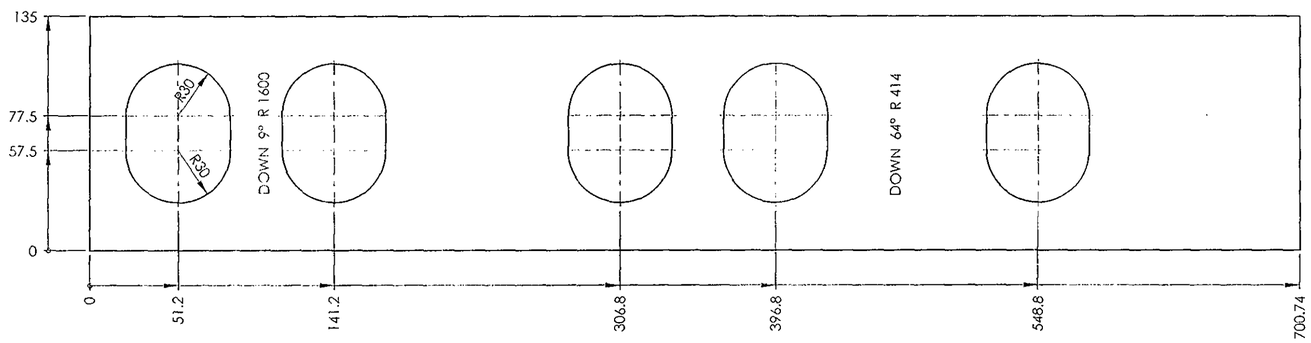

DEVELOPMENT VIEW

QTY.	DESCRIPTION	DIMENSIONS	ITEM NO.	REF. DRGS	MATL.SPEC.	WT/UNIT IN KGS	REMARKS
1	FLANGE	4 x 135 x 701	1		RDSO/SPEC C-101 X2CrNi12	2.367	

GROUP: 1-6 ROOF ASSEMBLY | SURFACE AREA IN Sq.m.: 0.160 | WT/ASSY IN Kgs: 2.367

FLANGE

SCALE 1:2 | SSE/D | CHD | ALT | ALTD | DRN: K.Sriram

INDIAN RAILWAY STANDARDS

INTEGRAL COACH FACTORY, CHENNAI - 600038

SHEET 1 OF 1

AAA16932 A2

DATE OF LATEST ALT.	DATE OF FIRST ISSUE	AME/SME
	21-03-2013	

REF.DRG.NO.3 10113.0.20.210.117

ALL DIMENSIONS ARE IN mm UNLESS OTHERWISE SPECIFIED. FOR UNTOLERANCED DIMENSIONS AND ROUGHNESS VALUES, REFER DRAWING NO ICF/STD-9-0-001.
ANY MANUAL ALTERATION SHALL BE TOTALLY RENDER THIS DRAWING INVALID. WELDING SYMBOLS ARE AS PER IS:813-1986.

AAA16933

▽ ROUGH MACHINED	ROUGH CLEANED
▽▽ FINISH MACHINED	BURRS REMOVED
▽▽▽ FINE FINISH MACHINED	CHAMFERED

REVISIONS			
ALT.	ZONE	DESCRIPTION	APPROVED & DATE

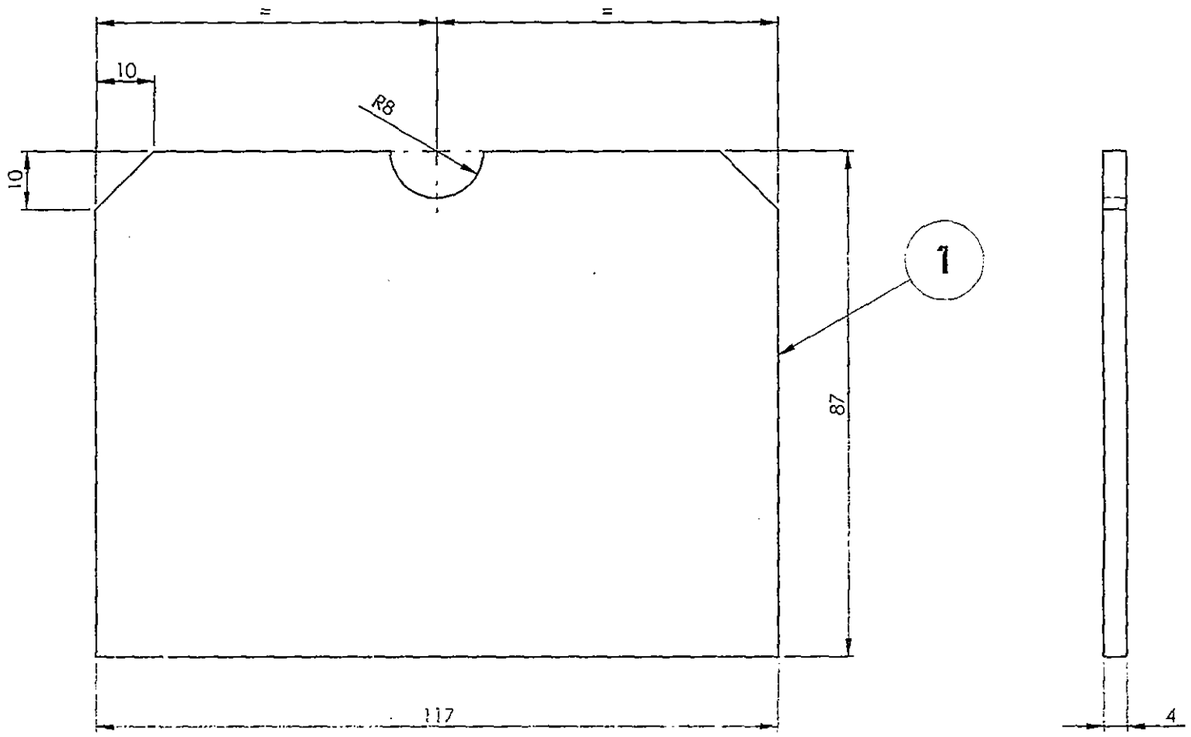

ALL DIMENSIONS ARE IN mm UNLESS OTHERWISE SPECIFIED. FOR UNTOLERANCED DIMENSIONS AND ROUGHNESS VALUES, REFER DRAWING NO ICF/STD 9 0.001.
ANY MANUAL ALTERATION SHALL AUTOMATICALLY RENDER THIS DRAWING INVALID. WELDING SYMBOLS ARE AS PER IS: 813-1986.

QTY.	DESCRIPTION	DIMENSIONS	ITEM NO.	REF. DRGS	MATL.SPEC.	WT/UNIT IN KGS	REMARKS
1	WEB	4 x 87 x 117	1		RDSO/SPEC C-K201 X2CrNi12	0.319	

GROUP: 1-6 ROOF ASSEMBLY | SURFACE AREA IN Sq.m.:0.022 | WT/ASSY IN Kgs:0.319

WEB

SCALE 1:1	SSE/D	
	CHD	
ALT.	ALTD	
	DRN	K.Sriram

INDIAN RAILWAY STANDARDS

INTEGRAL COACH FACTORY, CHENNAI - 600038

SHEET 1 OF 1

AAA16933 A3

DATE OF LATEST ALT.	DATE OF FIRST ISSUE	AME/SME
	21-03-2013	

REF.DRG.NO.3 10113.0.20.200.122

AAA16934

▽ ROUGH MACHINED	(C) ROUGH CLEANED
▽▽ FINISH MACHINED	(D) BURRS REMOVED
▽▽▽ FINE FINISH MACHINED	(B) CHAMFERED

REVISIONS			
ALT.	ZONE	DESCRIPTION	APPROVED & DATE

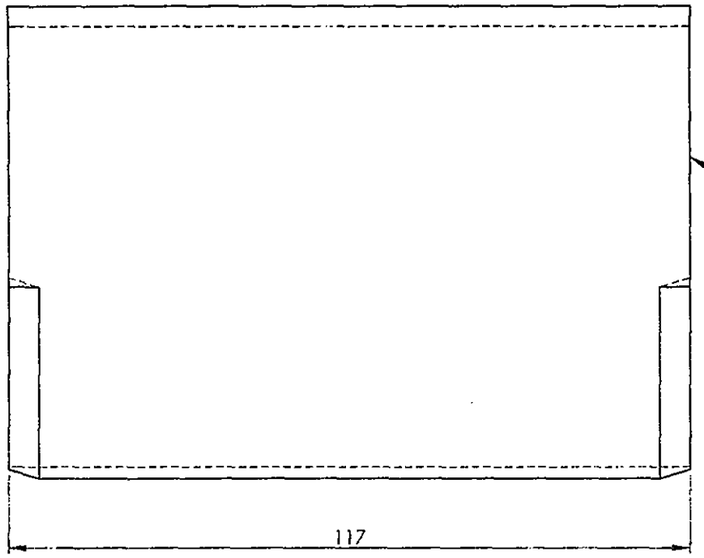

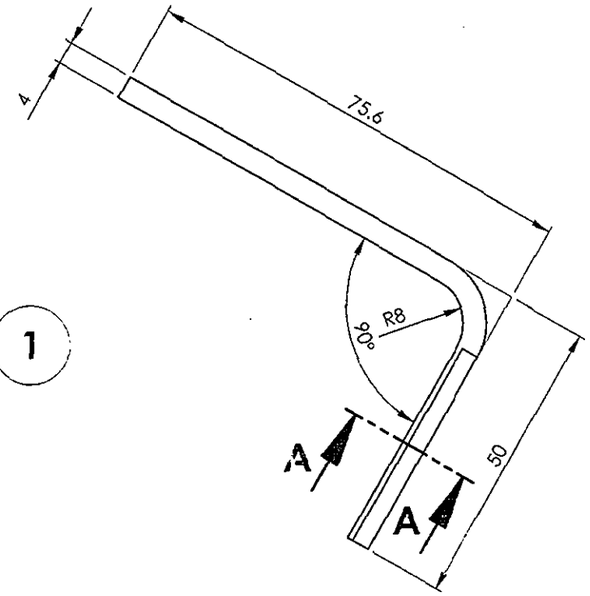

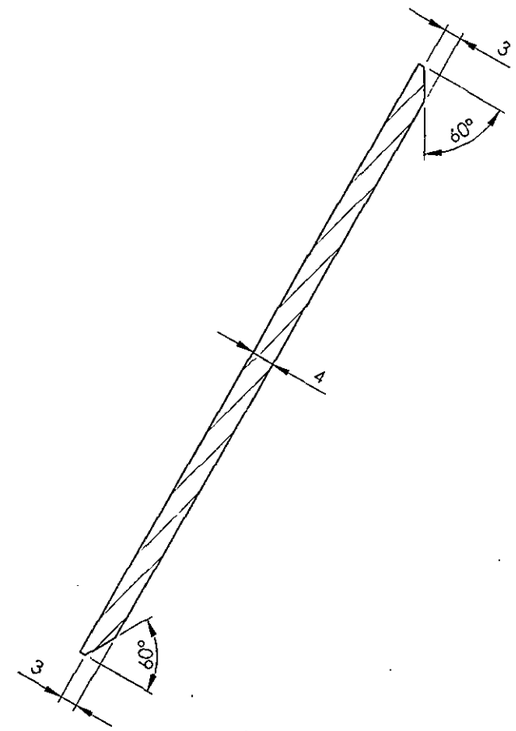

SECTION A-A

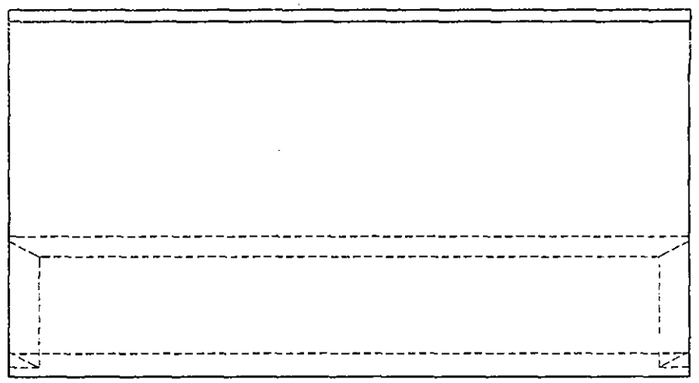

QTY.	DESCRIPTION	DIMENSIONS	ITEM NO.	REF. DRGS	MATL.SPEC.	WT/UNIT IN KGS	REMARKS
1	STIFFENING ANGLE	4 x 117 x 118	1		RDSO/SPEC C-K201 X2CrNi12	0.434	

GROUP: 1-6 ROOF ASSEMBLY | SURFACE AREA IN Sq.m.:0.029 | WT/ASSY IN Kgs:0.434

STIFFENING ANGLE

SCALE	SSE/D	Murthy Prasad
1:1	CHD	
ALT.	ALTD	
	DRN	K.Sriram

INDIAN RAILWAY STANDARDS

INTEGRAL COACH FACTORY, CHENNAI - 600038

SHEET 1 OF 1

AAA16934 A3

DATE OF LATEST ALT.	DATE OF FIRST ISSUE	AME/SME
	21-03-2013	

REF.DRG.NO.3 10113.0.20.200.124

ALL DIMENSIONS ARE IN mm UNLESS OTHERWISE SPECIFIED. FOR UNTOLERANCED DIMENSIONS AND ROUGHNESS VALUES, REFER DRAWING NO ICF/SID-9-0-001.

ANY MANUAL ALTERATION SHALL AUTOMATICALLY RENDER THIS DRAWING INVALID. WELDING SYMBOLS ARE AS PER IS:813-1986.

AAA16935

▽ ROUGH MACHINED	(01) ROUGH CLEANED		
▽▽ FINISH MACHINED	(510) BURRS REMOVED		
▽▽▽ FINE FINISH MACHINED	(18) CHAMFERED		

REVISIONS			
ALT.	ZONE	DESCRIPTION	APPROVED & DATE

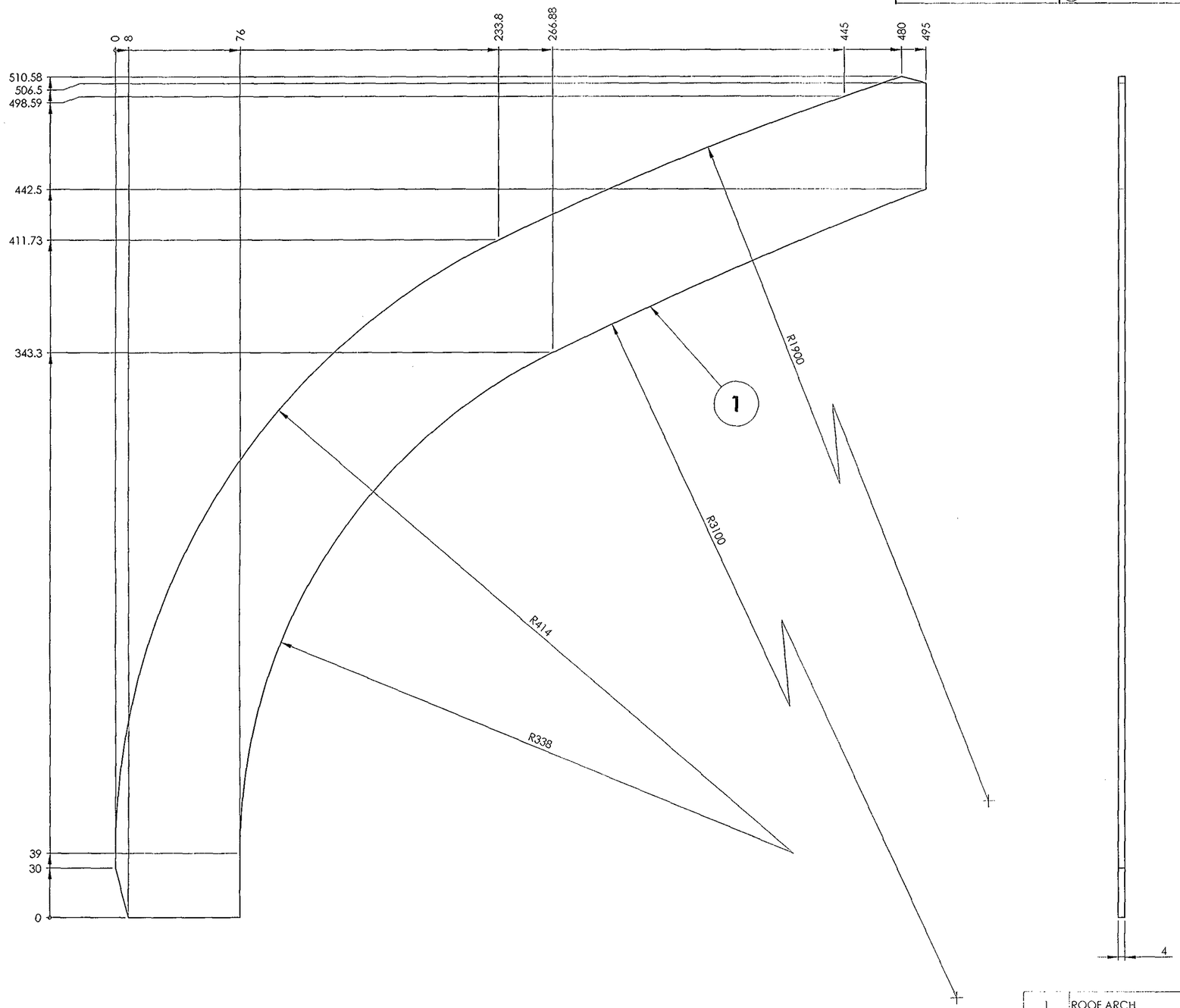

ALL DIMENSIONS ARE IN mm UNLESS OTHERWISE SPECIFIED. FOR UNTOLERANCED DIMENSIONS AND ROUGHNESS VALUES, REFER DRAWING NO ICF/STD-9-0-001.
ANY MANUAL ALTERATION SHALL AUTOMATICALLY RENDER THIS DRAWING INVALID. WELDING SYMBOLS ARE AS PER IS:813-1986.

QTY.	DESCRIPTION	DIMENSIONS	ITEM NO.	REF. DRGS	MATL.SPEC.	WT/UNIT IN KGS	REMARKS
1	ROOF ARCH	4 x 495 x 511	1		RDSO/SPEC C-K201 X2CrNi12	1.737	

GROUP: 1-6 ROOF ASSEMBLY | SURFACE AREA IN Sq.m.: 0.115 | WT/ASSY IN Kgs: 1.737

ROOF ARCH

SCALE 1:2	SSE/D	Lin Prasad
	CHD	
ALT	ALTD	
	DRN	K.Sriram

INDIAN RAILWAY STANDARDS
INTEGRAL COACH FACTORY, CHENNAI - 600038

SHEET 1 OF 1

AAA16935 A2

DATE OF LATEST ALT.	DATE OF FIRST ISSUE	AME/SME
	21-03-2013	

REF.DRG.NO.2 10113.0.20.210.104

AAA16936

▽ ROUGH MACHINED	(01) ROUGH CLEANED		
▽▽ FINISH MACHINED	(01b) BURRS REMOVED		
▽▽▽ FINE FINISH MACHINED	(18) CHAMFERED		

REVISIONS			
ALT.	ZONE	DESCRIPTION	APPROVED & DATE

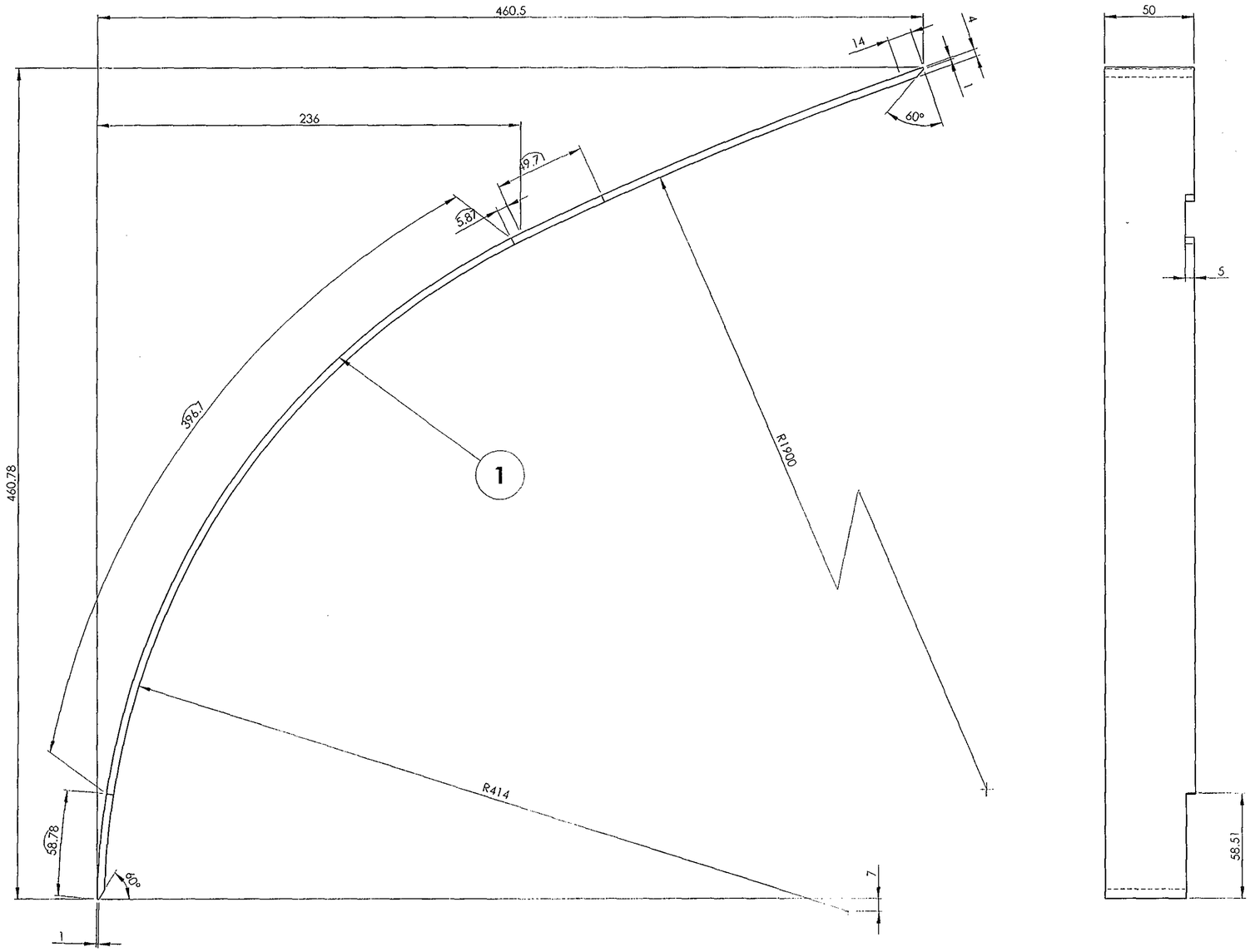

ALL DIMENSIONS ARE IN mm UNLESS OTHERWISE SPECIFIED. FOR UNTOLERANCED DIMENSIONS AND ROUGHNESS VALUES, REFER DRAWING NO ICF/STD-9-0-001.
ANY MANUAL ALTERATION SHALL AUTOMATICALLY RENDER THIS DRAWING INVALID. WELDING SYMBOLS ARE AS PER IS:813-1986.

QTY.	DESCRIPTION	DIMENSIONS	ITEM NO.	REF. DRGS	MATL.SPEC.	WT/UNIT IN KGS	REMARKS
1	FLANGE	4 x 50 x 702	1		RDSO/SPEC C-K201 X2CrNi12	1.098	

GROUP: 1-6 ROOF ASSEMBLY | SURFACE AREA IN Sq.m.: 0.075 | WT/ASSY IN Kgs: 1.098

FLANGE

SCALE 1:2	SSE/D	Vidyaprasad
	CHD	
ALT	ALTD	
	DRN	K.Sriram

INDIAN RAILWAY STANDARDS
INTEGRAL COACH FACTORY, CHENNAI - 600038

SHEET 1 OF 1

AAA16936 **A2**

DATE OF LATEST ALT.	DATE OF FIRST ISSUE	AME/SME
	21-03-2013	

REF.DRG.NO.3 10113.0.20.210.119

AAA16937

▽ ROUGH MACHINED	(D1) ROUGH CLEANED		
▽▽ FINISH MACHINED	(D1b) BURRS REMOVED		
▽▽▽ FINE FINISH MACHINED	(18) CHAMFERED		

REVISIONS				
ALT.	ZONE		DESCRIPTION	APPROVED & DATE

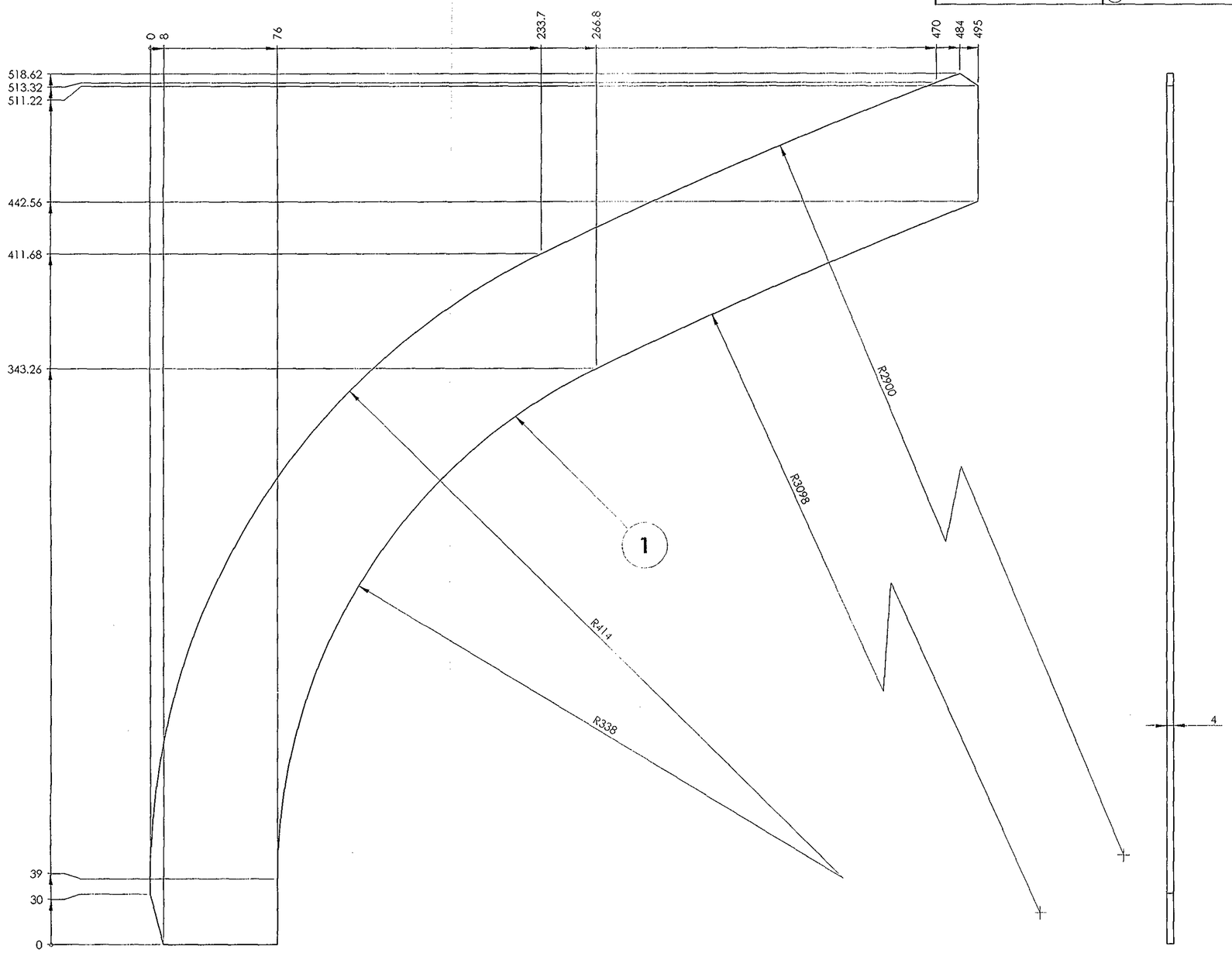

ALL DIMENSIONS ARE IN mm UNLESS OTHERWISE SPECIFIED. FOR UNTOLERANCED DIMENSIONS AND ROUGHNESS VALUES, REFER DRAWING NO ICF/STD-9-0-001.
ANY MANUAL ALTERATION SHALL AUTOMATICALLY RENDER THIS DRAWING INVALID. WELDING SYMBOLS ARE AS PER SS 13-1986.

QTY.	DESCRIPTION	DIMENSIONS	ITEM NO.	REF. DRGS	MATL.SPEC.	WT/UNIT IN KGS	REMARKS
1	ROOF ARCH	4 x 495 x 519	1		RDSO/SPEC C-K201 X2CrNi12	1.758	

GROUP: 1-6 ROOF ASSEMBLY | SURFACE AREA IN Sq.m.: 0.116 | WT/ASSY IN Kgs: 1.758

ROOF ARCH

SCALE 1:2 | SSE/D | CHD | ALT | ALTD | DRN: K.Sriram

INDIAN RAILWAY STANDARDS
INTEGRAL COACH FACTORY, CHENNAI - 600038

SHEET 1 OF 1

AAA16937 A2

DATE OF LATEST ALT.	DATE OF FIRST ISSUE	AME/SME
	21-03-2012	

REF.DRG.NO.2 10113.0.20.210.105

AAA16938

▽ ROUGH MACHINED	(01) ROUGH CLEANED		
▽▽ FINISH MACHINED	(HB) BURRS REMOVED		
▽▽▽ FINE FINISH MACHINED	(18) CHAMFERED		

REVISIONS

ALT.	ZONE	DESCRIPTION	APPROVED & DATE

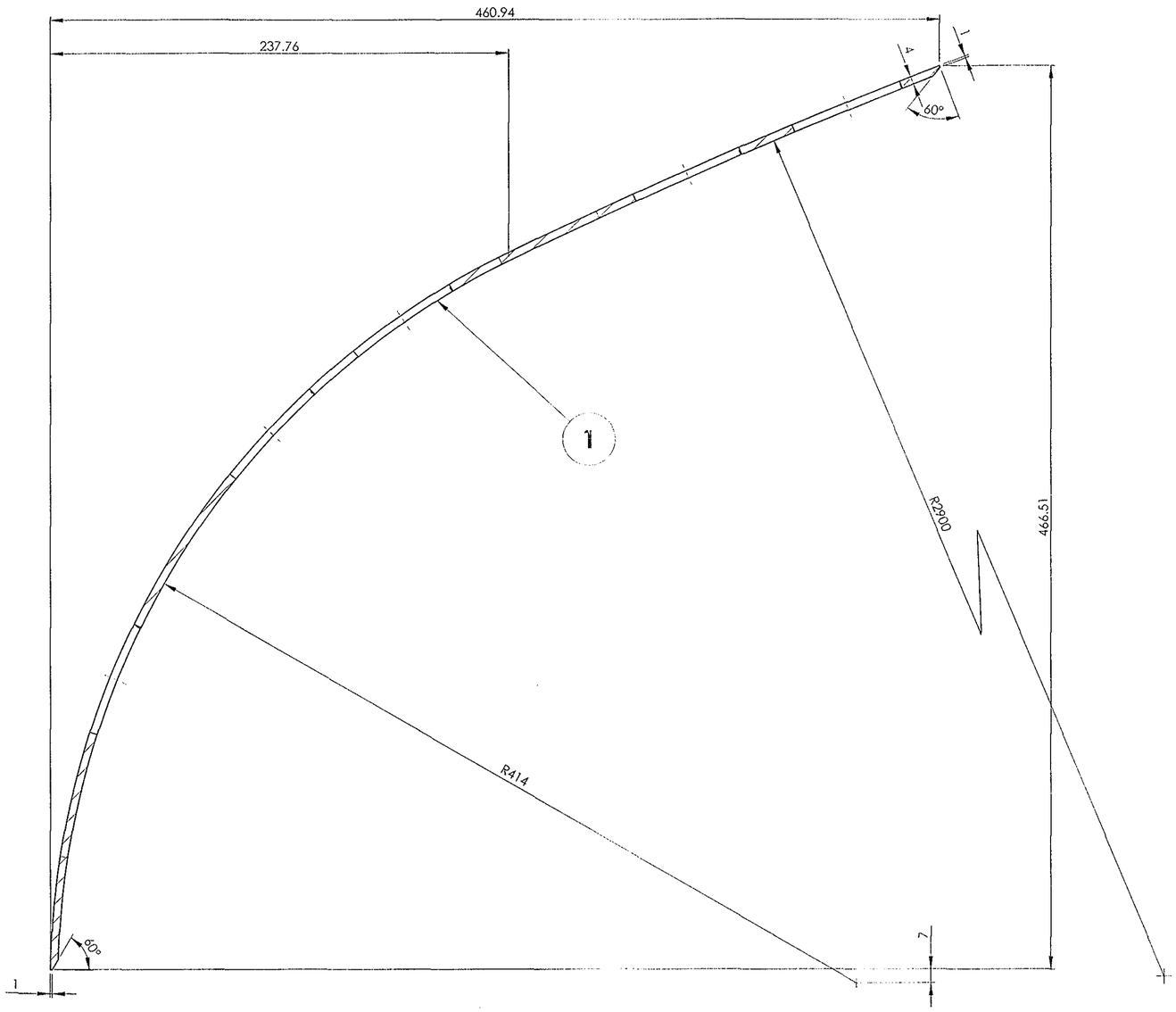

SECTION A-A

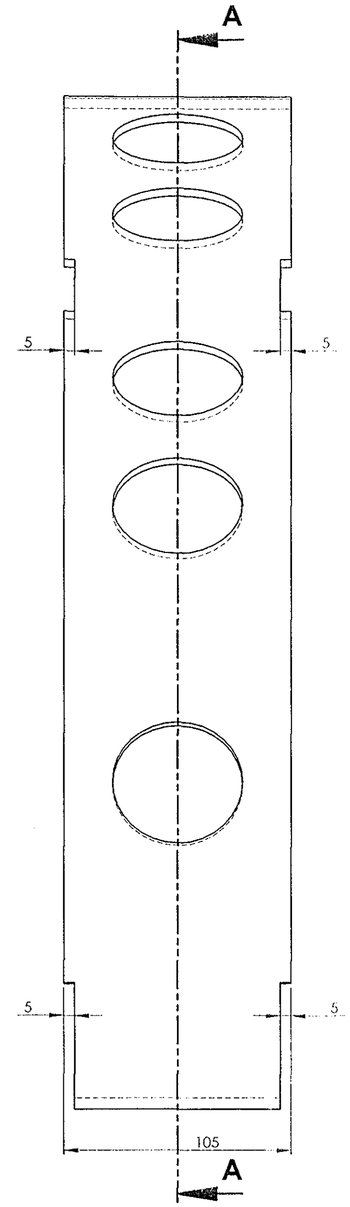

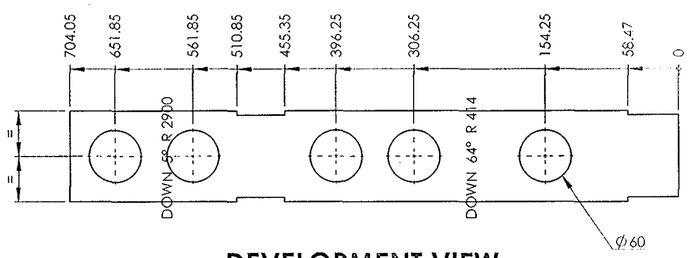

DEVELOPMENT VIEW

ALL DIMENSIONS ARE IN mm UNLESS OTHERWISE SPECIFIED. FOR UNTOLERANCED DIMENSIONS AND ROUGHNESS VALUES, REFER DRAWING NO. ICF/STD-9-0-001.
ANY MANUAL ALTERATION SHALL AUTOMATICALLY RENDER THIS DRAWING INVALID. WELDING SYMBOLS ARE AS PER IS813-1986.

QTY.	DESCRIPTION	DIMENSIONS	ITEM NO.	REF. DRGS	MATL.SPEC.	WT/UNIT IN KGS	REMARKS
1	FLANGE	4 x 105 x 705	1		RDSO/SPEC C-K201 X2CrNi12	1.864	

GROUP: 1-6 ROOF ASSEMBLY | SURFACE AREA IN Sq.m.: 0.127 | WT/ASSY IN Kgs: 1.864

FLANGE

SCALE 1:2	SSE/D	Murthy Prasad
	CHD	
ALT	ALTD	
	DRN	K.Sriram

INDIAN RAILWAY STANDARDS
INTEGRAL COACH FACTORY, CHENNAI - 600038

SHEET 1 OF 1

AAA16938 A2

DATE OF LATEST ALT.	DATE OF FIRST ISSUE	AME/SME
	21-03-2013	

REF.DRG.NO.3 10113.0.20.210.121

AAA16939

▽ ROUGH MACHINED	ROUGH CLEANED
▽▽ FINISH MACHINED	BURRS REMOVED
▽▽▽ FINE FINISH MACHINED	CHAMFERED

REVISIONS			
ALT.	ZONE	DESCRIPTION	APPROVED & DATE

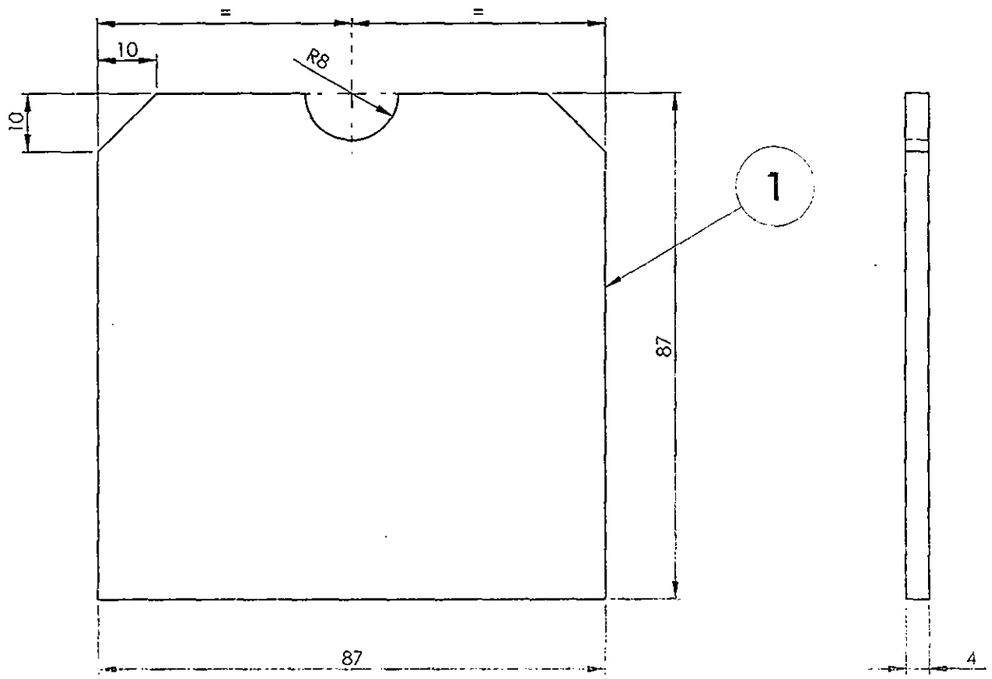

ALL DIMENSIONS ARE IN mm UNLESS OTHERWISE SPECIFIED. FOR UNTOLERANCED DIMENSIONS AND ROUGHNESS VALUES, REFER DRAWING NO ICF/STD 9 0 001.
ANY MANUAL ALTERATION SHALL AUTOMATICALLY RENDER THIS DRAWING INVALID. WELDING SYMBOLS ARE AS PER IS: 813 1986.

REF.DRG.NO.3 10113.0.20.200.121

QTY.	DESCRIPTION	DIMENSIONS	ITEM NO.	REF. DRGS	MATL.SPEC.	WT/UNIT IN KGS	REMARKS
1	WEB	4 x 87 x 87	1		RDSO/SPEC C-K201 X2CrNi12	0.236	

GROUP: 1-6 ROOF ASSEMBLY | SURFACE AREA IN Sq.m.:0.016 | WT/ASSY IN Kgs:0.236

WEB

SCALE 1:1	SSE/D	Prasad
	CHD	
ALT.	ALTD	
	DRN	K.Sriram

DATE OF LATEST ALT.	DATE OF FIRST ISSUE	AME/SME
	21-03-2013	

INDIAN RAILWAY STANDARDS

INTEGRAL COACH FACTORY, CHENNAI - 600038

SHEET 1 OF 1

AAA16939 A3

AAA16940

▽ ROUGH MACHINED	ROUGH CLEANED
▽▽ FINISH MACHINED	BURRS REMOVED
▽▽▽ FINE FINISH MACHINED	CHAMFERED

REVISIONS			
ALT.	ZONE	DESCRIPTION	APPROVED & DATE

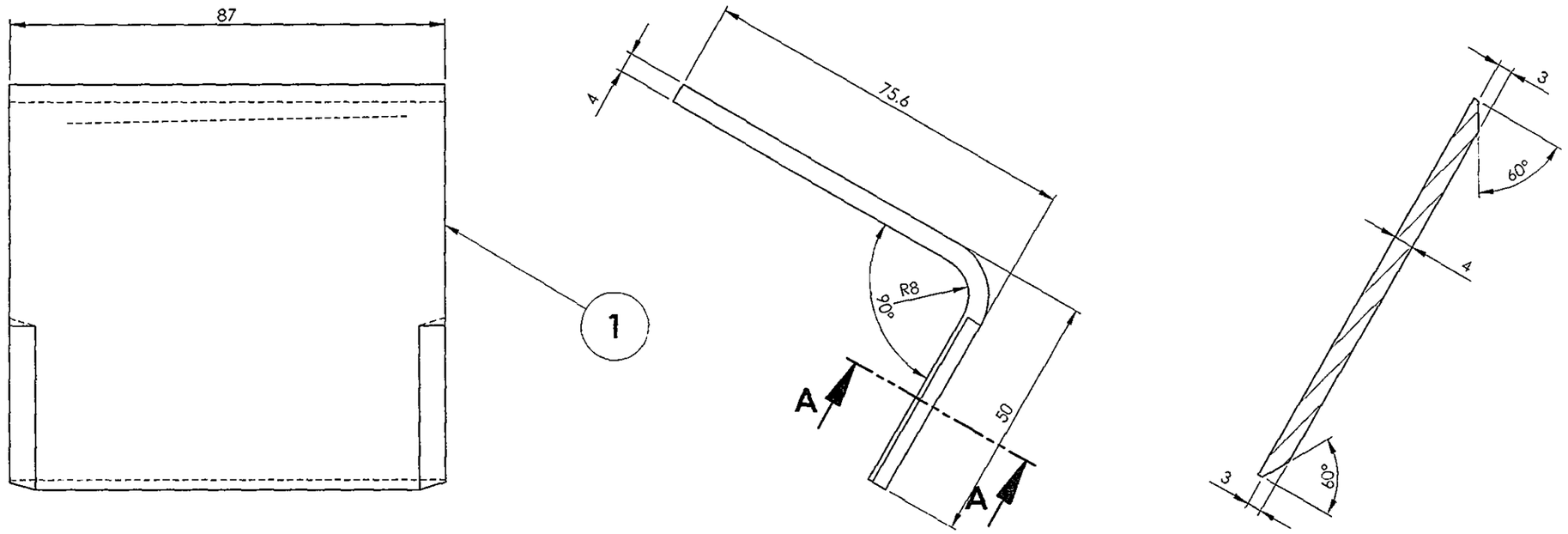

SECTION A-A

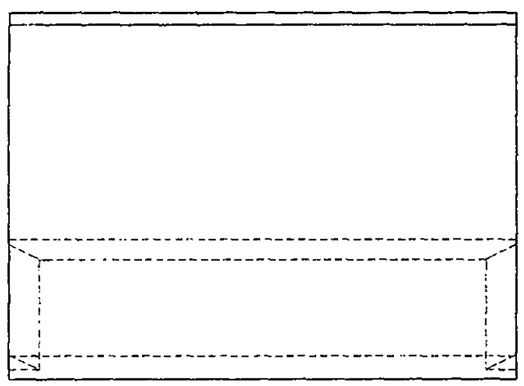

ALL DIMENSIONS ARE IN mm UNLESS OTHERWISE SPECIFIED. FOR UNTOLERANCED DIMENSIONS AND ROUGHNESS VALUES, REFER DRAWING NO ICF/STD 9-0 001.
ANY MANUAL ALTERATION SHALL AUTOMATICALLY RENDER THIS DRAWING INVALID. WELDING SYMBOLS ARE AS PER IS: 813 1986.

REF.DRG.NO.3 10113.0.20.200.117

QTY.	DESCRIPTION	DIMENSIONS	ITEM NO.	REF. DRGS	MATL.SPEC.	WT/UNIT IN KGS	REMARKS
1	STIFFENING ANGLE	4 x 87 x 118	1		RDSO/SPEC C-K201 X2CrNi12	0.322	

GROUP: 1-6 ROOF ASSEMBLY | SURFACE AREA IN Sq.m.:0.022 | WT/ASSY IN Kgs:0.322

STIFFENING ANGLE

SCALE 1:1	SSE/D	Murugaprasad
	CHD	
ALT.	ALTD	
	DRN	K.Sriram

INDIAN RAILWAY STANDARDS
INTEGRAL COACH FACTORY, CHENNAI - 600038

SHEET 1 OF 1

AAA16940 A3

DATE OF LATEST ALT.	DATE OF FIRST ISSUE	AME/SME
	21-03-2013	

AAA16941

▽ ROUGH MACHINED	(01) ROUGH CLEANED
▽▽ FINISH MACHINED	(01b) BURRS REMOVED
▽▽▽ FINE FINISH MACHINED	(18) CHAMFERED

REVISIONS			
ALT.	ZONE	DESCRIPTION	APPROVED & DATE

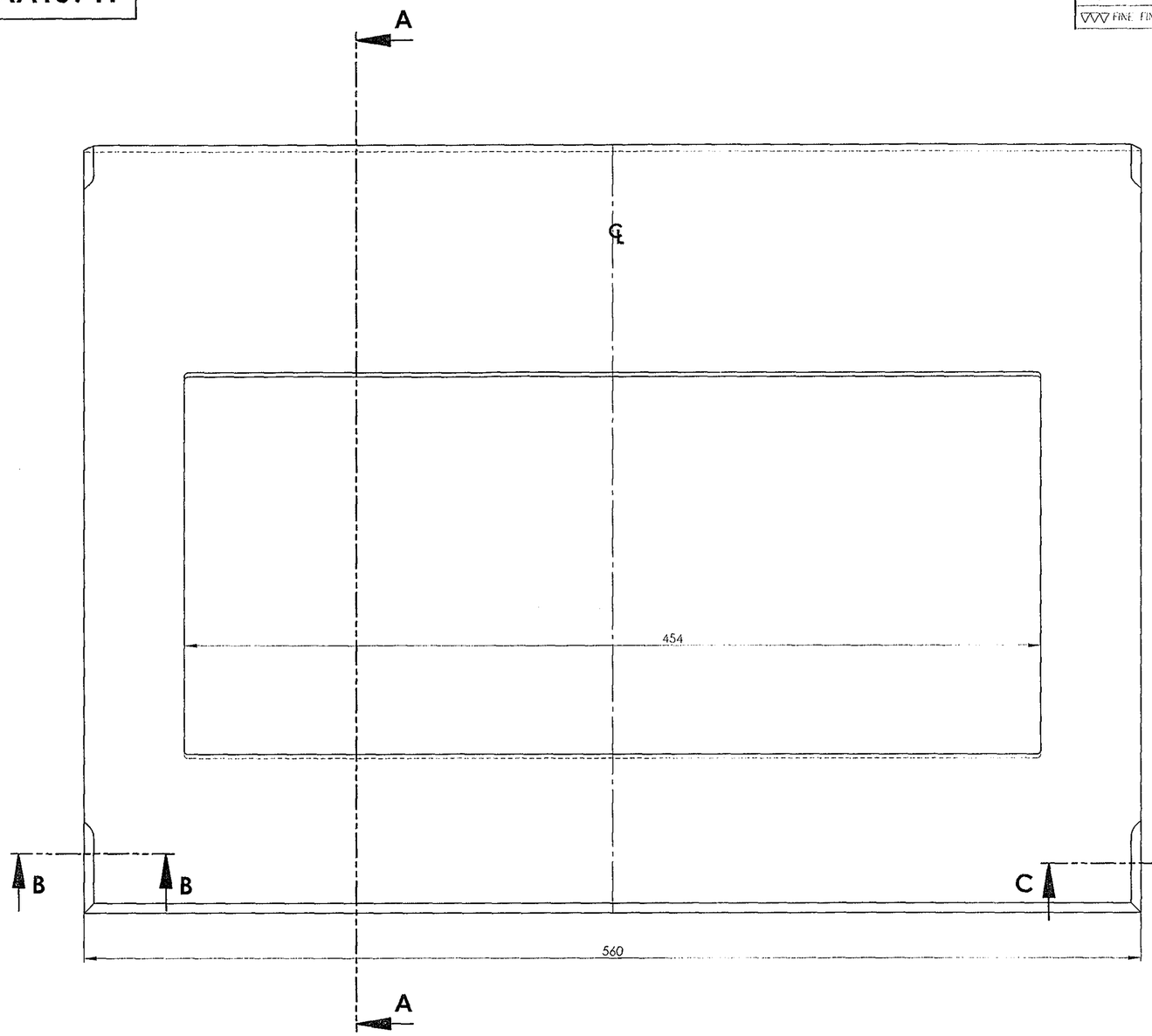

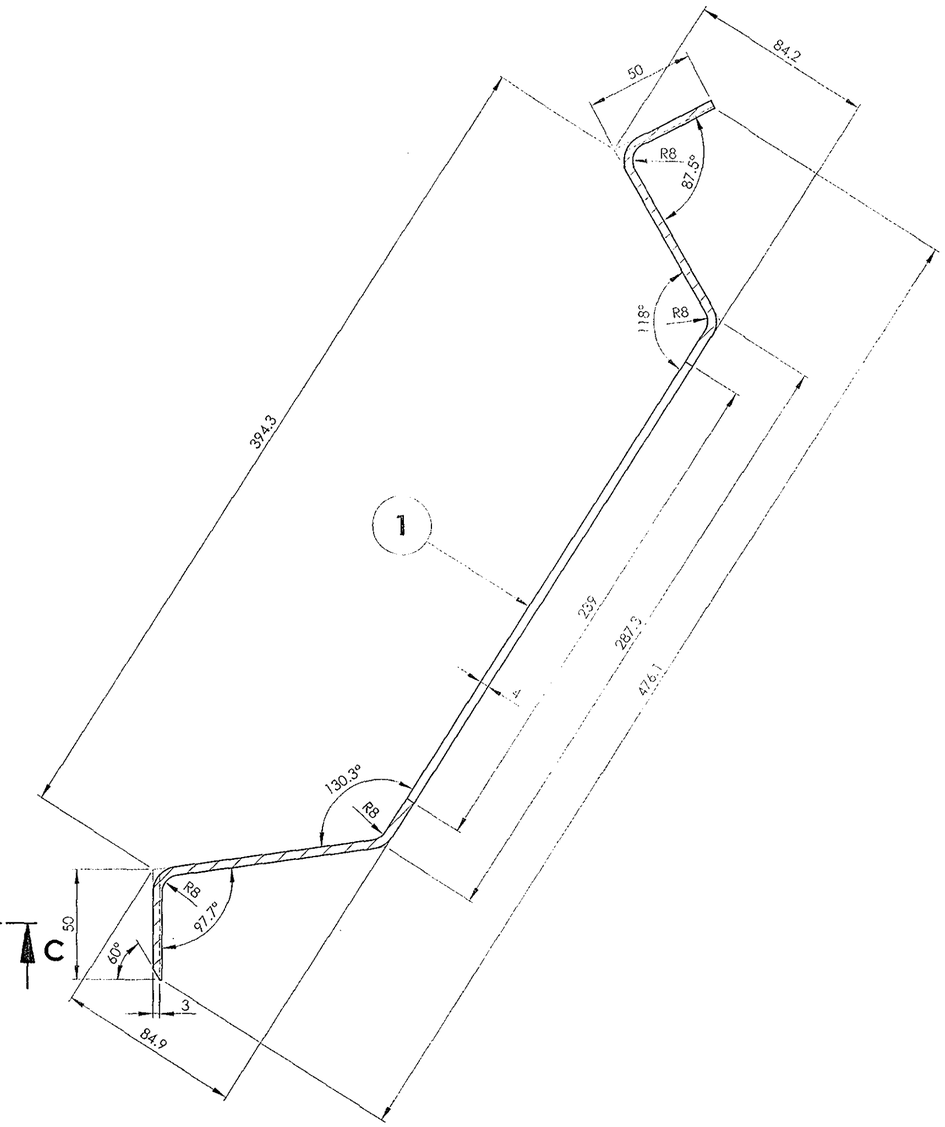

SECTION A-A
SCALE 1 : 2

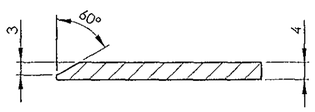

SECTION B-B
SCALE 1 : 1

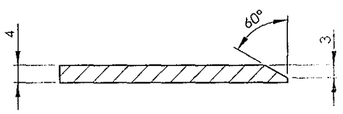

SECTION C-C
SCALE 1 : 1

ALL DIMENSIONS ARE IN mm UNLESS OTHERWISE SPECIFIED. FOR UNTOLERANCED DIMENSIONS AND ROUGHNESS VALUES. REFER DRAWING NO ICF/STD-9-0-001.
ANY MANUAL ALTERATION SHALL AUTOMATICALLY RENDER THIS DRAWING INVALID. WELDING SYMBOLS ARE AS PER IS:813-1986.

QTY.	DESCRIPTION	DIMENSIONS	ITEM NO.	REF. DRGS	MATL.SPEC.	WT/UNIT IN KGS	REMARKS
1	TERMINAL FRAME	4 x 560 x 568	1		RDSO/SPEC C-K201 X2CrNi12	6.658	

GROUP: 1-6 ROOF ASSEMBLY | SURFACE AREA IN Sq.m.: 0.432 | WT/ASSY IN Kgs:6.658

TERMINAL FRAME

SCALE 1:2	SSE/D	Prasad
	CHD	
ALT	ALTD	
	DRN	K.Sriram

INDIAN RAILWAY STANDARDS
INTEGRAL COACH FACTORY, CHENNAI - 600038

SHEET 1 OF 1

AAA16941 A2

	21-03-2013	
DATE OF LATEST ALT.	DATE OF FIRST ISSUE	AME/SME

REF.DRG.NO.1 10113.0.20.200.127

AAA16942

▽ ROUGH MACHINED	(C) ROUGH CLEANED
▽▽ FINISH MACHINED	(B) BURRS REMOVED
▽▽▽ FINE FINISH MACHINED	(8) CHAMFERED

REVISIONS			
ALT.	ZONE	DESCRIPTION	APPROVED & DATE

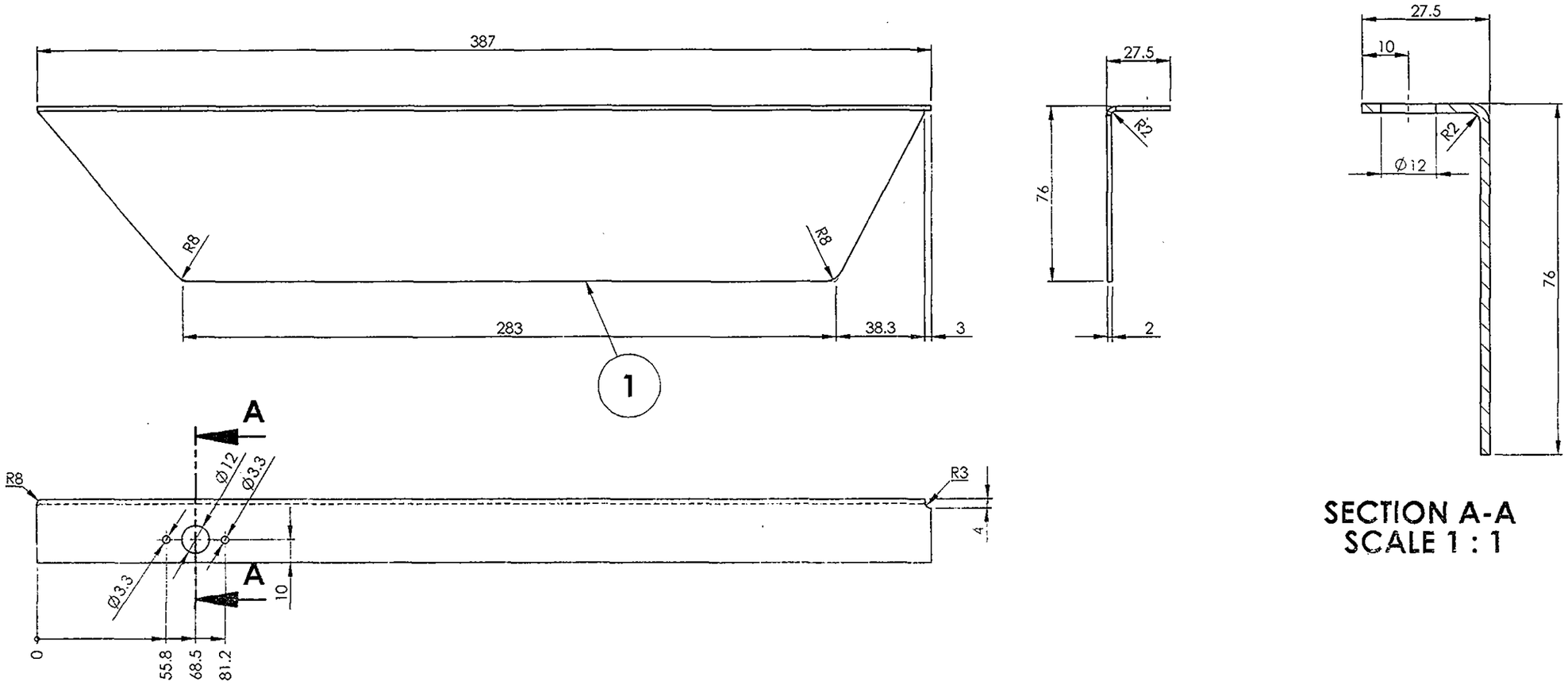

SECTION A-A
SCALE 1 : 1

ALL DIMENSIONS ARE IN mm UNLESS OTHERWISE SPECIFIED. FOR UNTOLERANCED DIMENSIONS AND ROUGHNESS VALUES, REFER DRAWING NO ICF/STD 9.0.001.
ANY MANUAL ALTERATION SHALL AUTOMATICALLY RENDER THIS DRAWING INVALID. WELDING SYMBOLS ARE AS PER IS: 813-1986.

REF.DRG.NO.3 10113.0.20.200.128

QTY.	DESCRIPTION	DIMENSIONS	ITEM NO.	REF. DRGS	MATL.SPEC.	WT/UNIT IN KGS	REMARKS
1	CLOSING ANGLE	2 x 101 x 387	1		RDSO/SPEC C-K201 X2CrNi12	0.556	

GROUP: 1-6 ROOF ASSEMBLY | SURFACE AREA IN Sq.m.:0.071 | WT./ASSY IN Kgs:0.556

CLOSING ANGLE

SCALE 1:2	SSE/D	Siva Prasad
	CHD	
ALT.	ALTD	
	DRN	K.Sriram

INDIAN RAILWAY STANDARDS
INTEGRAL COACH FACTORY, CHENNAI - 600038

SHEET 1 OF 1

AAA16942 | A3

DATE OF LATEST ALT.	DATE OF FIRST ISSUE	AME/SME
	21-03-2013	

AAA16943

▽ ROUGH MACHINED	ROUGH CLEANED
▽▽ FINISH MACHINED	BURRS REMOVED
▽▽▽ FINE FINISH MACHINED	CHAMFERED

REVISIONS			
ALT.	ZONE	DESCRIPTION	APPROVED & DATE

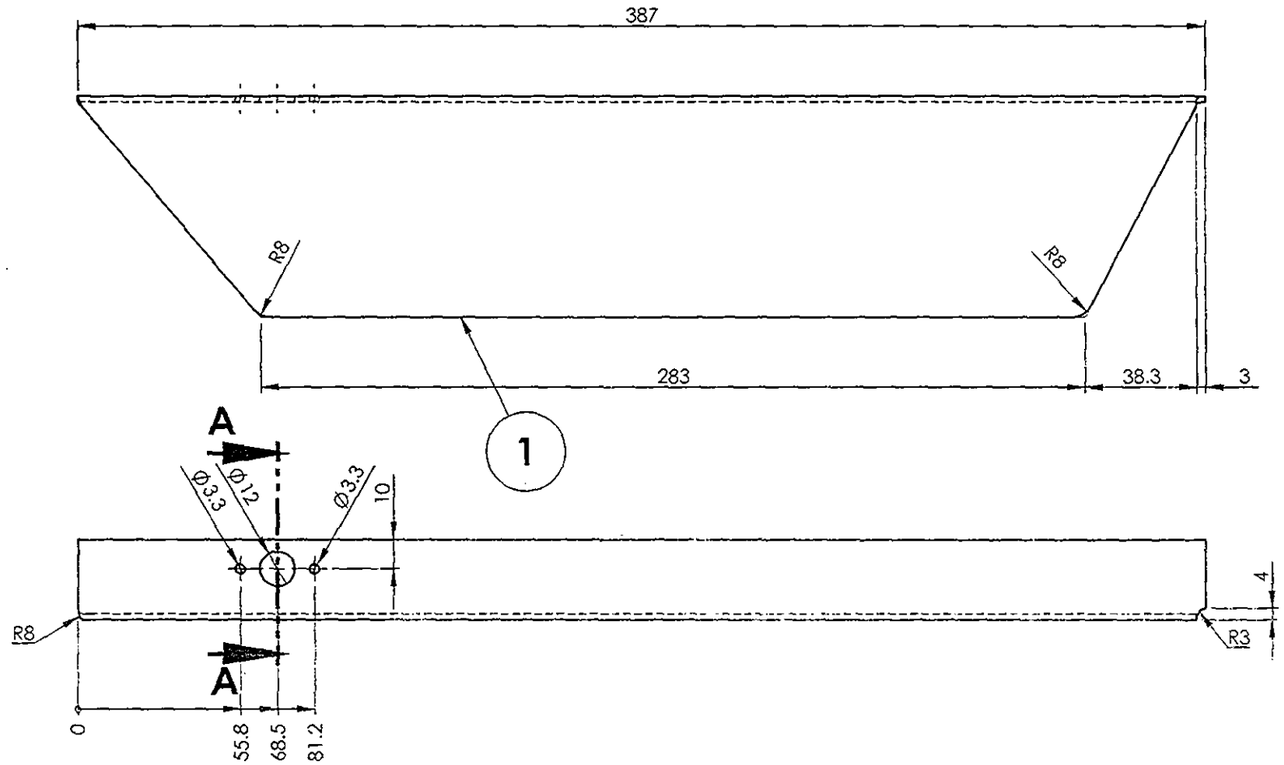

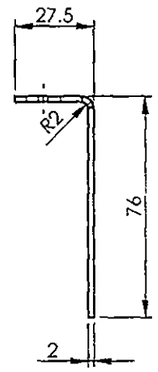

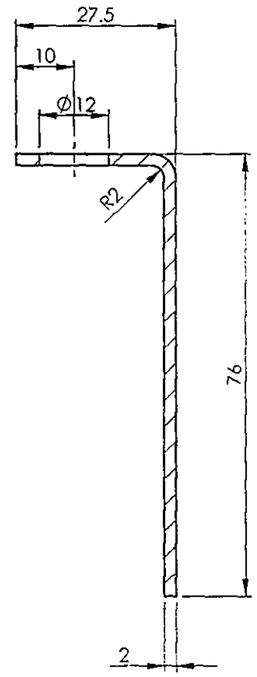

SECTION A-A
SCALE 1 : 1

ALL DIMENSIONS ARE IN mm UNLESS OTHERWISE SPECIFIED. FOR UNTOLERANCED DIMENSIONS AND ROUGHNESS VALUES, REFER DRAWING NO ICF/STD-9 0 001.
ANY MANUAL ALTERATION SHALL AUTOMATICALLY RENDER THIS DRAWING INVALID. WELDING SYMBOLS ARE AS PER IS: 813-1986.

QTY.	DESCRIPTION	DIMENSIONS	ITEM NO.	REF. DRGS	MATL.SPEC.	WT/UNIT IN KGS	REMARKS
1	CLOSING ANGLE	2 x 101 x 387	1		RDSO/SPEC C-K201 X2CrNi12	0.069	

GROUP: 1-6 ROOF ASSEMBLY | SURFACE AREA IN Sq.m.:0.07 | WT/ASSY IN Kgs:0.56

CLOSING ANGLE

SCALE	SSE/D	
1:2	CHD	
ALT.	ALTD	
	DRN	K.Sriram

INDIAN RAILWAY STANDARDS
INTEGRAL COACH FACTORY, CHENNAI - 600038

SHEET 1 OF 1

AAA16943 A3

DATE OF LATEST ALT.	DATE OF FIRST ISSUE	AME/SME
	21-03-2013	

REF.DRG.NO.3 10113.0.20.200.129

AAA51072

▽ ROUGH MACHINED	(01) ROUGH CLEANED
▽▽ FINISH MACHINED	(01b) BURRS REMOVED
▽▽▽ FINE FINISH MACHINED	(18) CHAMFERED

REVISIONS

ALT.	ZONE	DESCRIPTION	APPROVED & DATE
a		NAME PLATE REVISED.	-sd-
b		DESIGN REVISED.	-sd-
c		BATCH & SERIAL NO. ADDED	-sd-
d		NOTE-2 ADDED.	

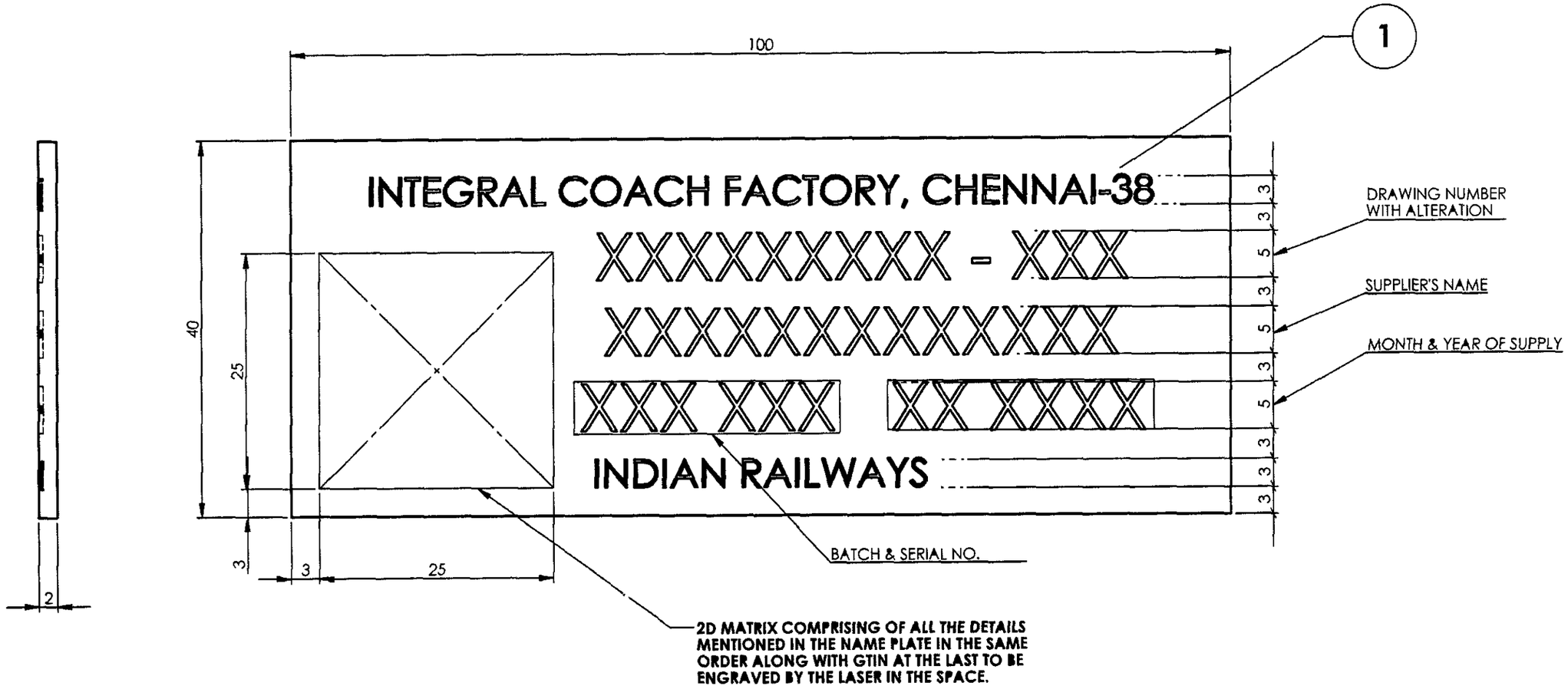

NOTE:

1. LETTERS TO BE PUNCHED OR ENGRAVED.

$ 2. ALTERNATIVELY **AISI-304/SS-304 (X02Cr19Ni10)/IS:6911(X04Cr19Ni9)** ALSO ACCEPTABLE.

QTY	DESCRIPTION	DIMENSIONS	ITEM NO.	REF. DRGS	MATL.SPEC.	WT/UNIT IN KGS	REMARKS
1	NAME PLATE FOR SUPPLIER IDENTIFICATION	2x40x100	1		RDSO/SPEC C-K201 X2 Cr Ni 12	0.063	$

GROUP: 5-1 Body Side Doors | SURFACE AREA IN Sq.m.:0.009 | WT/ASSY IN Kgs:

NAME PLATE FOR SUPPLIER IDENTIFICATION

SCALE 2:1	SSE/D	
	CHD	
ALT. d	ALTD	KUNTI THAKUR
	DRN	G. NAGESWARAN

INDIAN RAILWAY STANDARDS
INTEGRAL COACH FACTORY, CHENNAI - 600038

SHEET 1 OF 1

AAA51072 A3

DATE OF LATEST ALT.	DATE OF FIRST ISSUE	AME/SME
06-07-2024	02.06.2010	

REF.DRG.NO.

...NS ARE IN mm UNLESS OTHERWISE SPECIFIED. FOR UNTOLERANCED DIMENSIONS AND ROUGHNESS VALUES, REFER DRAWING NO ICF/STD-9-0-001.
ANY MANUAL ALTERATION SHALL AUTOMATICALLY RENDER THIS DRAWING INVALID. WELDING SYMBOLS ARE AS PER IS: 813-1986.
WEIGHT GIVEN IN DRAWING IS FOR INDICATIVE PURPOSE ONLY

AAB10005

▽ ROUGH MACHINED	(1) ROUGH CLEANED
▽▽ FINISH MACHINED	(2) BURRS REMOVED
▽▽▽ SUPER FINISH MACHINED	(3) CHAMFERED

REVISIONS			
ALT.	ZONE	DESCRIPTION	APPROVED & DATE

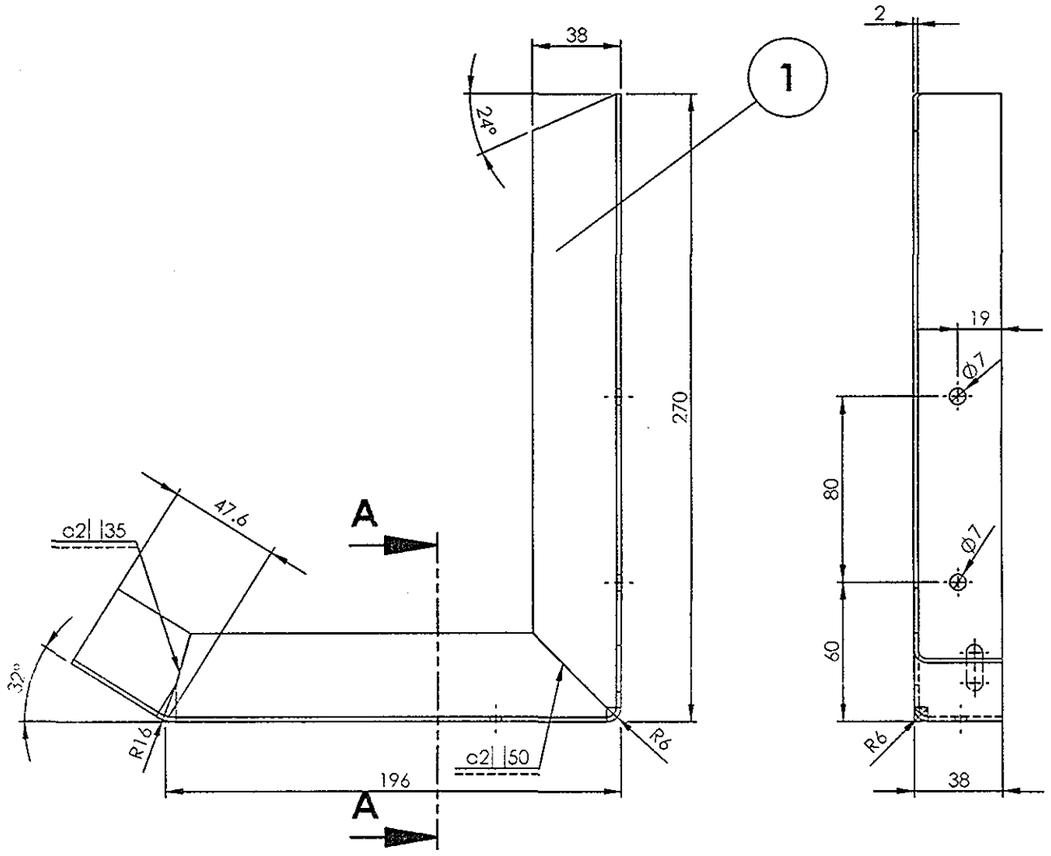

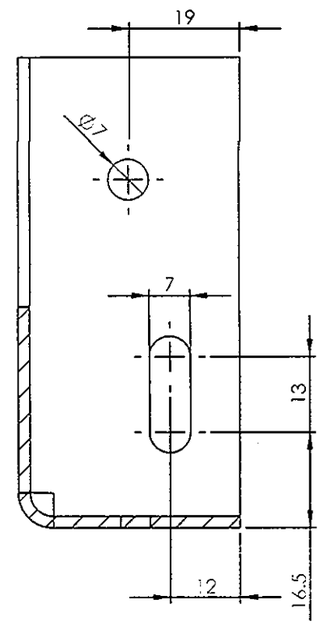

SECTION A-A
SCALE 1 : 1

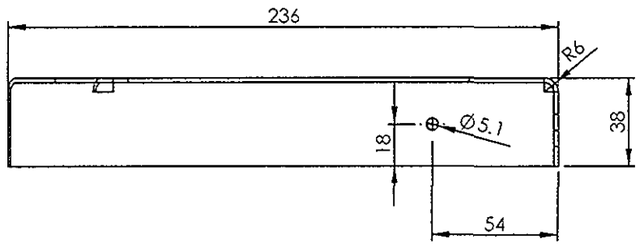

QTY.	DESCRIPTION	DIMENSIONS	ITEM NO.	REF. DRGS	MATL.SPEC.	WT/UNIT IN KGS	REMARKS
1	BRACKET	2x72x508	1		RDSO/SPEC C-K201 X2CrNi12	0.547	

GROUP: 1-0 | SURFACE AREA IN Sq.m.:0.071 | WT/ASSY IN Kgs:0.547

BRACKET

SCALE 1:2.5	SSE/D	
	CHD	
ALT.	ALTD	
	DRN	L.PANDURANGA RAO

INDIAN RAILWAY STANDARDS

INTEGRAL COACH FACTORY, CHENNAI - 600038

SHEET 1 OF 1

AAB10005 A3

DATE OF LATEST ALT.	DATE OF FIRST ISSUE	AME/SME
	10-04-2013	13/6/13

REF.DRG.NO.3 10113.0.20.095.112

ALL DIMENSIONS ARE IN mm UNLESS OTHERWISE SPECIFIED. FOR UNTOLERANCED DIMENSIONS AND ROUGHNESS VALUES, REFER DRAWING NO IC1/SID 9 0 (X).
ANY MANUAL ALTERATION SHALL AUTOMATICALLY RENDER THIS DRAWING INVALID. WELDING SYMBOLS ARE AS PER IS: 813 1986.

AAB10006

▽ ROUGH MACHINED	ROUGH CLEANED
▽▽ FINISH MACHINED	BURRS REMOVED
▽▽▽ FINE FINISH MACHINED	CHAMFERED

REVISIONS			
ALT.	ZONE	DESCRIPTION	APPROVED & DATE

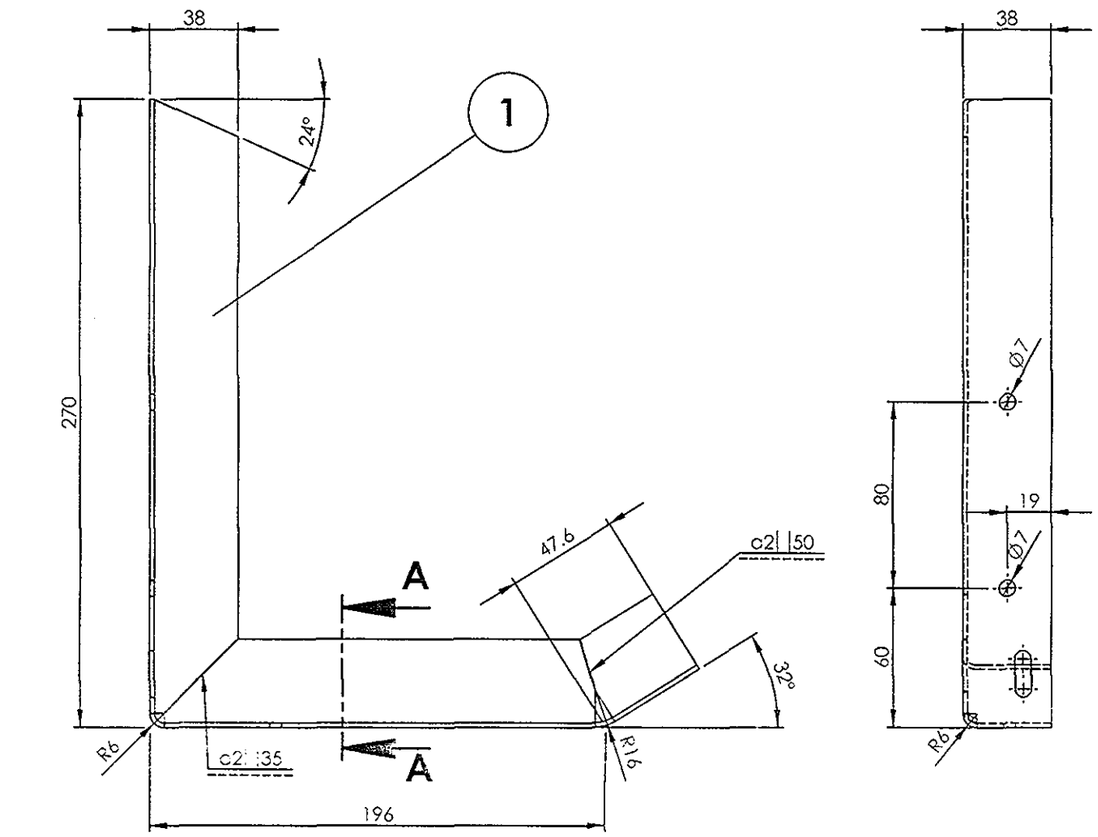

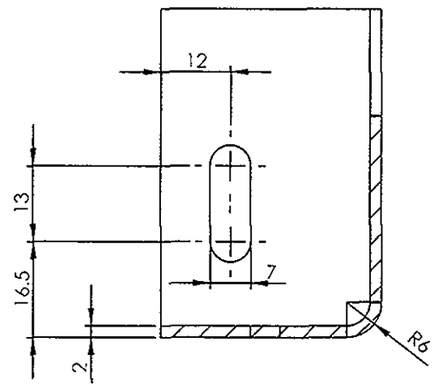

SECTION A-A
SCALE 1 : 1

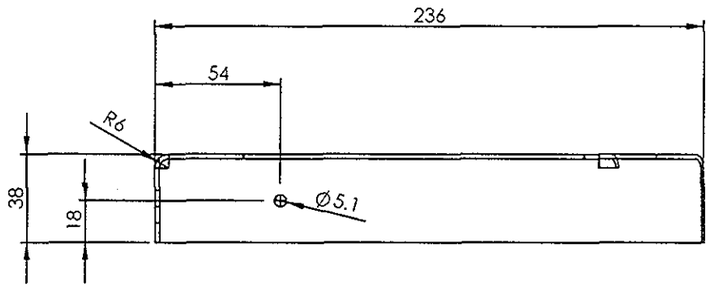

ALL DIMENSIONS ARE IN mm UNLESS OTHERWISE SPECIFIED. FOR UNTOLERANCED DIMENSIONS AND SURFACE ROUGHNESS VALUES, REFER DRAWING NO ICF/SID 9 0 001.
ANY MANUAL ALTERATION SHALL AUTOMATICALLY RENDER THIS DRAWING INVALID. WELDING SYMBOLS ARE AS PER IS: 813 1986.

REF.DRG.NO.3 10113.0.20.095.113

QTY.	DESCRIPTION	DIMENSIONS	ITEM NO.	REF. DRGS	MATL.SPEC.	WT/UNIT IN KGS	REMARKS
1	BRACKET	2x72x508	1		RDSO/SPEC C-K201 X2CrNi12	0.547	

GROUP: 1-0 | SURFACE AREA IN Sq.m.:0.071 | WT/ASSY IN Kgs:0.547

BRACKET

SCALE 1:2	SSE/D	
	CHD	
ALT.	ALTD	
	DRN	L.PANDURANGA RAO

INDIAN RAILWAY STANDARDS
INTEGRAL COACH FACTORY, CHENNAI - 600038

SHEET 1 OF 1

AAB10006 | A3

DATE OF LATEST ALT.	DATE OF FIRST ISSUE	AME/SME
	10-04-2013	

AAB10008

▽ ROUGH MACHINED	(01) ROUGH CLEANED
▽▽ FINISH MACHINED	(01b) BURRS REMOVED
▽▽▽ FINE FINISH MACHINED	(18) CHAMFERED

REVISIONS			
ALT.	ZONE	DESCRIPTION	APPROVED & DATE

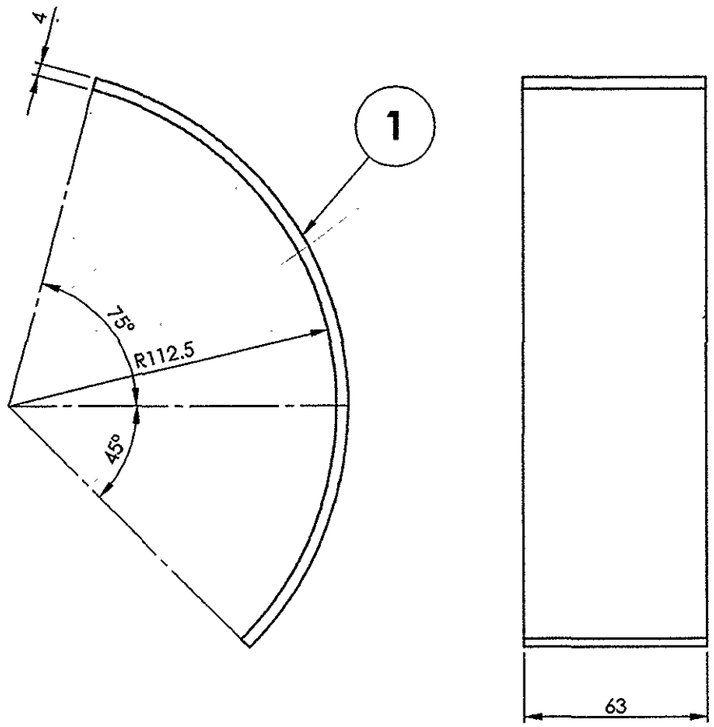

ALL DIMENSIONS ARE IN mm UNLESS OTHERWISE SPECIFIED. FOR UNTOLERANCED DIMENSIONS AND ROUGHNESS VALUES, REFER DRAWING NO ICF/STD-9-0-001.
ANY MANUAL ALTERATION SHALL AUTOMATICALLY RENDER THIS DRAWING INVALID. WELDING SYMBOLS ARE AS PER IS: 813-1986.

QTY.	DESCRIPTION	DIMENSIONS	ITEM NO.	REF. DRGS	MATL.SPEC.	WT/UNIT IN KGS	REMARKS
1	RING	4 x 63 x 240	1		RDSO/SPEC C-K201 X2CrNi12	0.483	

GROUP: 1-6 ROOF ASSEMBLY | SURFACE AREA IN Sq.m.:0.033 | WT/ASSY IN Kgs:0.483

RING

SCALE 1:2	SSE/D	
	CHD	
ALT.	ALTD	
	DRN	K.Sriram

INDIAN RAILWAY STANDARDS
INTEGRAL COACH FACTORY, CHENNAI - 600038

SHEET 1 OF 1

AAB10008 A3

DATE OF LATEST ALT.	DATE OF FIRST ISSUE	AME/SME
	12-06-2013	

REF.DRG.NO.-

AAB10010

▽ ROUGH MACHINED	(01) ROUGH CLEANED
▽▽ FINISH MACHINED	(01b) BURRS REMOVED
▽▽▽ FINE FINISH MACHINED	(18) CHAMFERED

REVISIONS			
ALT.	ZONE	DESCRIPTION	APPROVED & DATE

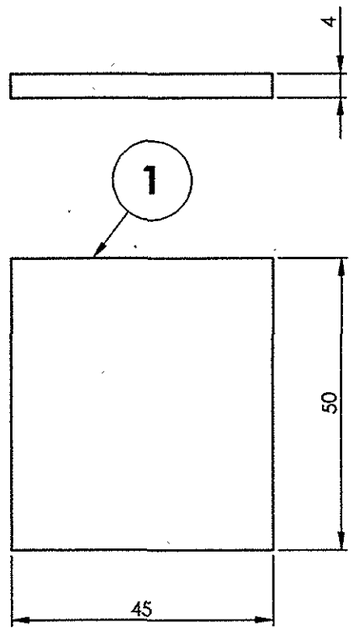

ALL DIMENSIONS ARE IN mm UNLESS OTHERWISE SPECIFIED. FOR UNTOLERANCED DIMENSIONS AND ROUGHNESS VALUES, REFER DRAWING NO ICF/STD-9-0-001.
ANY MANUAL ALTERATION SHALL AUTOMATICALLY RENDER THIS DRAWING INVALID. WELDING SYMBOLS ARE AS PER IS: 813-1986.

REF:DRG.NO.-

QTY.	DESCRIPTION	DIMENSIONS	ITEM NO.	REF. DRGS	MATL.SPEC.	WT/UNIT IN KGS	REMARKS
1	PLATE	4 x 45 x 50	1		RDSO/SPEC C-K201 X2CrNi12	0.072	

GROUP: 1-6 ROOF ASSEMBLY | SURFACE AREA IN Sq.m.:0.005 | WT/ASSY IN Kgs:0.072

PLATE

SCALE	SSE/D	
1:1	CHD	
ALT.	ALTD	
	DRN	K.Sriram

DATE OF LATEST ALT.	DATE OF FIRST ISSUE	AME/SME
	12-06-2013	

INDIAN RAILWAY STANDARDS

INTEGRAL COACH FACTORY, CHENNAI - 600038

SHEET 1 OF 1

AAB10010 A3

AAB10073

▽ ROUGH MACHINED	(01) ROUGH CLEANED
▽▽ FINISH MACHINED	(01b) BURRS REMOVED
▽▽▽ FINE FINISH MACHINED	(18) CHAMFERED

REVISIONS			
ALT.	ZONE	DESCRIPTION	APPROVED & DATE

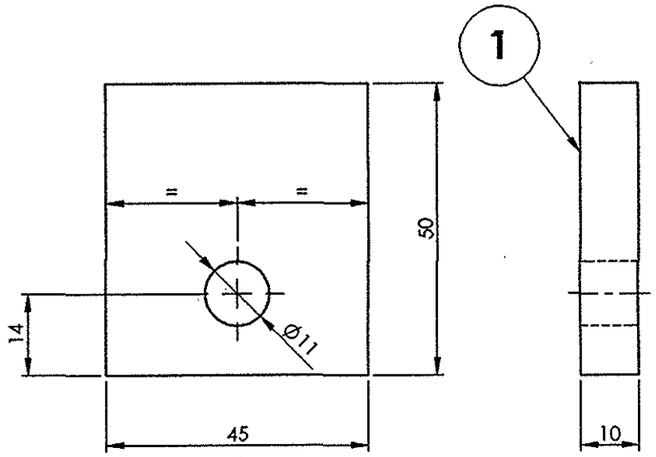

ALL DIMENSIONS ARE IN mm UNLESS OTHERWISE SPECIFIED. FOR UNTOLERANCED DIMENSIONS AND ROUGHNESS VALUES, REFER DRAWING NO ICF/STD-9-0-001.
ANY MANUAL ALTERATION SHALL AUTOMATICALLY RENDER THIS DRAWING INVALID. WELDING SYMBOLS ARE AS PER IS: 813-1986.

REF.DRG.NO.

QTY.	DESCRIPTION	DIMENSIONS	ITEM NO.	REF. DRGS	MATL.SPEC.	WT/UNIT IN KGS	REMARKS
1	PLATE	10 x 45 x 50	1		RDSO/SPEC C-K201 X2CrNi12	0.172	

GROUP: 1-6 ROOF ASSEMBLY | SURFACE AREA IN Sq.m.:0.007 | WT/ASSY IN Kgs:0.172

PLATE

SCALE	SSE/D	Prasad
1:1	CHD	
ALT.	ALTD	
	DRN	K.Sriram

INDIAN RAILWAY STANDARDS

INTEGRAL COACH FACTORY, CHENNAI - 600038

SHEET 1 OF 1

AAB10073 A3

DATE OF LATEST ALT.	DATE OF FIRST ISSUE	AME/SME
	12-06-2013	

AAB16550

▽ ROUGH MACHINED	(01) ROUGH CLEANED
▽▽ FINISH MACHINED	(01b) BURRS REMOVED
▽▽▽ FINE FINISH MACHINED	(18) CHAMFERED

REVISIONS			
ALT.	ZONE	DESCRIPTION	APPROVED & DATE

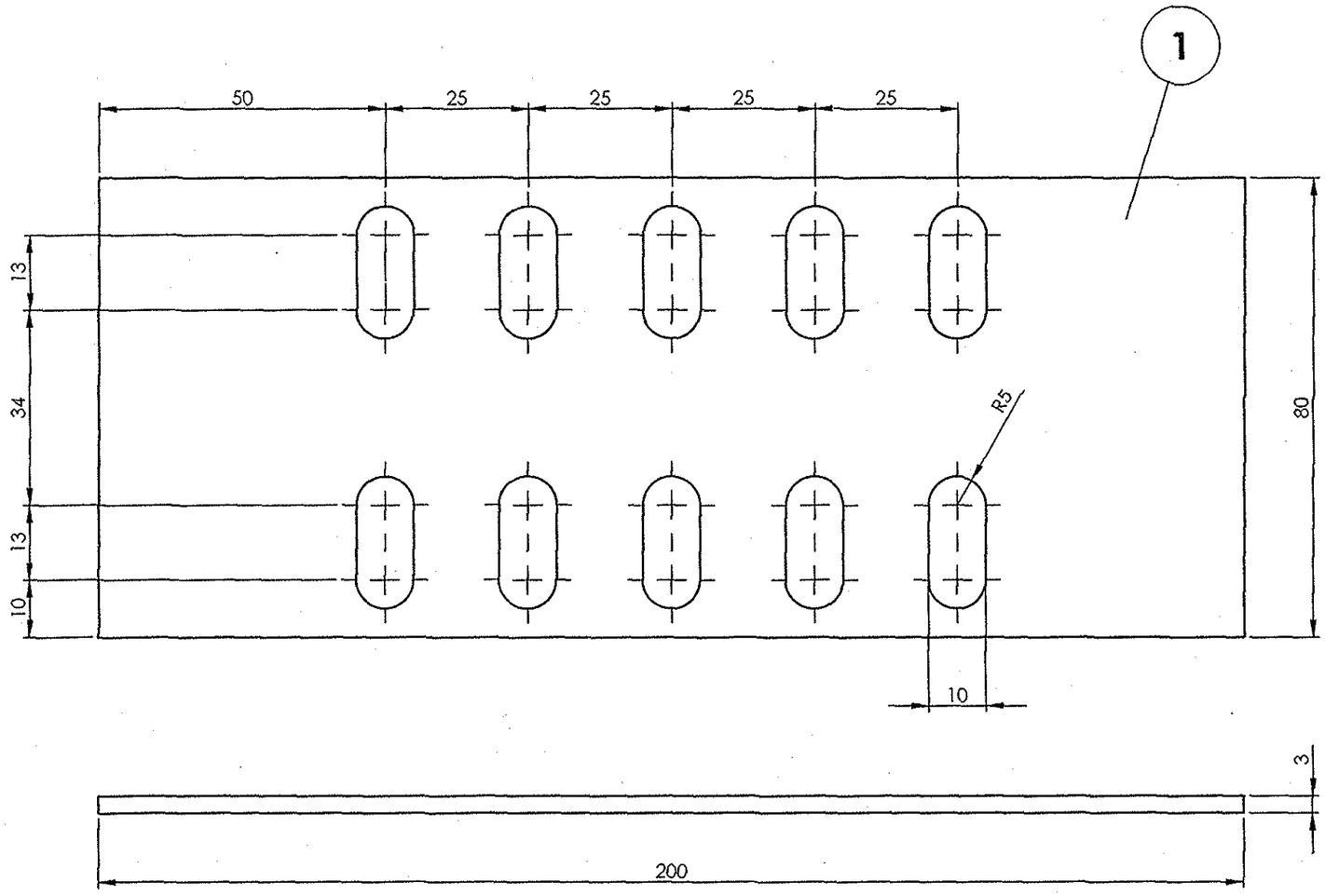

QTY.	DESCRIPTION	DIMENSIONS	ITEM NO.	REF. DRGS	MATL.SPEC.	WT/UNIT IN KGS	REMARKS
1	FLAT	3x80x200	1		RDSO/SPEC C-K201 X2CrNi12	0.33	

GROUP: 1-6 | SURFACE AREA IN Sq.m.: | WT/ASSY IN Kgs:

FLAT

SCALE 1:1	SSE/D	P. Sharma
	CHD	
ALT.	ALTD	
	DRN	P.MURUGAN

INDIAN RAILWAY STANDARDS

INTEGRAL COACH FACTORY, CHENNAI - 600038

SHEET 1 OF 1

AAB16550 A3

DATE OF LATEST ALT.	DATE OF FIRST ISSUE	AME/SME
-	9/2/16	A. [illegible]

REF.DRG.NO.-

ALL DIMENSIONS ARE IN mm UNLESS OTHERWISE SPECIFIED. FOR UNTOLERANCED DIMENSIONS AND ROUGHNESS VALUES, REFER DRAWING NO ICF/STD-9-0-001.
ANY MANUAL ALTERATION SHALL AUTOMATICALLY RENDER THIS DRAWING INVALID. WELDING SYMBOLS ARE AS PER IS: 813-1986.
WEIGHT GIVEN IN DRAWING IS FOR INDICATIVE PURPOSE ONLY

AAD16884

▽ ROUGH MACHINED	(01) ROUGH CLEANED
▽▽ FINISH MACHINED	(61c) BURRS REMOVED
▽▽▽ FINE FINISH MACHINED	(18) CHAMFERED

REVISIONS			
ALT.	ZONE	DESCRIPTION	APPROVED & DATE

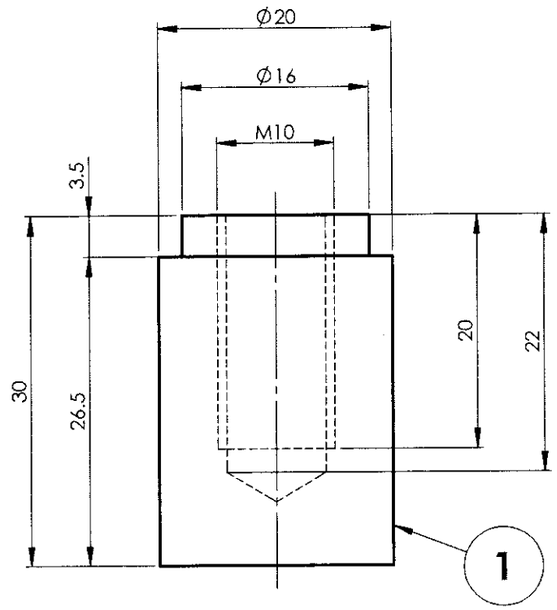

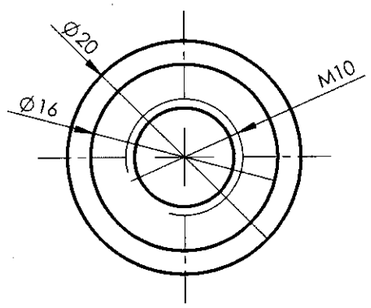

ALL DIMENSIONS ARE IN mm UNLESS OTHERWISE SPECIFIED. FOR UNTOLERANCED DIMENSIONS AND ROUGHNESS VALUES, REFER DRAWING NO ICF/STD-9-0-001.
ANY MANUAL ALTERATION SHALL AUTOMATICALLY RENDER THIS DRAWING INVALID. WELDING SYMBOLS ARE AS PER IS: 813-1986.
WEIGHT GIVEN IN DRAWING IS FOR INDICATIVE PURPOSE ONLY

QTY	DESCRIPTION	DIMENSIONS	ITEM NO.	REF. DRGS	MATL.SPEC.	WT/UNIT IN KGS	REMARKS
1	SCREWING PIECE	Ø 20 X 30	1		AISI 304	0.06	

GROUP: 1-6 Roof Construction

SURFACE AREA IN Sq.m.:

WT/ASSY IN Kgs:

SCREWING PIECE

SCALE 2:1	SSE/D	L. Pandurangaiah
	CHD	
ALT. -	ALTD	
	DRN	S K MUTHUKUMAR

INDIAN RAILWAY STANDARDS

INTEGRAL COACH FACTORY, CHENNAI - 600038

SHEET 1 OF 1

AAD16884 A3

DATE OF LATEST ALT.	DATE OF FIRST ISSUE	AME/SME
	06-03-21	6/3/21

REF.DRG.NO.

AAE16686

▽ ROUGH MACHINED	(01) ROUGH CLEANED		
▽▽ FINISH MACHINED	(01b) BURRS REMOVED		
▽▽▽ FINE FINISH MACHINED	(18) CHAMFERED		

REVISIONS

ALT.	ZONE	DESCRIPTION	APPROVED & DATE
a		DIMENSION REVISED. VIEWS UPDATED.	19/3/24

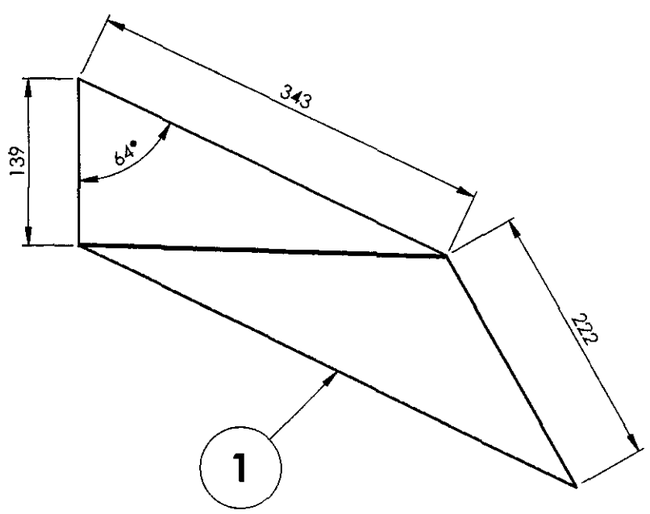

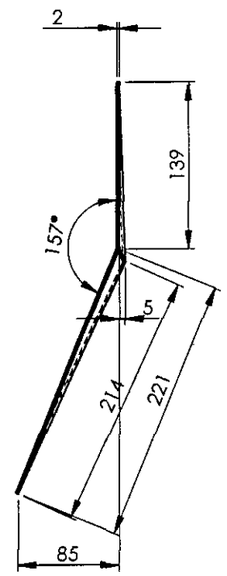

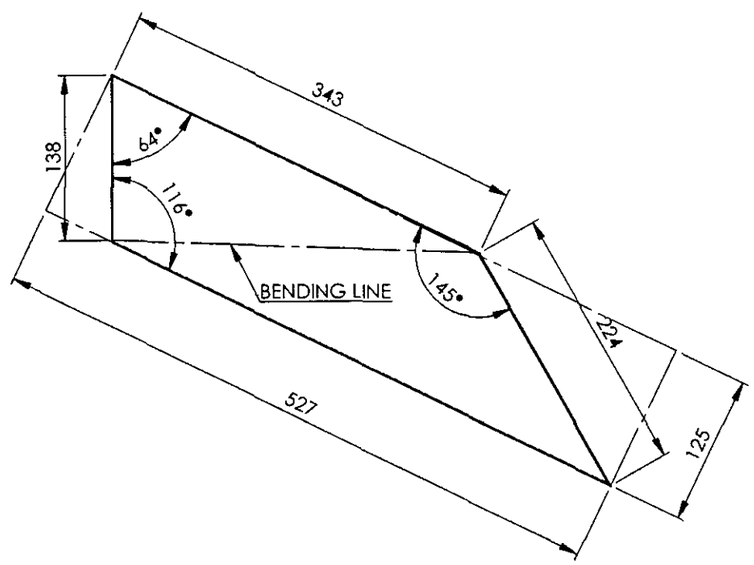

DEVELOPMENT VIEW

ALL DIMENSIONS ARE IN mm UNLESS OTHERWISE SPECIFIED. FOR UNTOLERANCED DIMENSIONS AND ROUGHNESS VALUES, REFER DRAWING NO ICF/STD-9-0-001.
ANY MANUAL ALTERATION SHALL AUTOMATICALLY RENDER THIS DRAWING INVALID. WELDING SYMBOLS ARE AS PER IS: 813-1986.

REF.DRG.NO.3 10113.0.20.200.140

DATE OF LATEST ALT.	DATE OF FIRST ISSUE	AME/SME
15-03-24	07-06-23	13/3/24

Default	DESCRIPTION	DIMENSIONS	ITEM NO.	REF. DRGS	MATL.SPEC.	WT/UNIT IN KGS	REMARKS
1	SIDE SHEET	2 x 126 x 531	1		RDSO/SPEC C-K201 X2CrNi12	0.865	

GROUP: 1-6 Roof Construction | SURFACE AREA IN Sq.m.:0.111 | WT/ASSY IN Kgs:0.865

SIDE SHEET

SCALE 1:5	SSE/D	L Pandiarajan
	CHD	
ALT. a	ALTD	E.SATHISH KUMAR
	DRN	E.SATHISH KUMAR

INDIAN RAILWAY STANDARDS
INTEGRAL COACH FACTORY, CHENNAI - 600038

SHEET 1 OF 1

AAE16686 A3

AAE16687

▽ ROUGH MACHINED	(01) ROUGH CLEANED
▽▽ FINISH MACHINED	(01b) BURRS REMOVED
▽▽▽ FINE FINISH MACHINED	(18) CHAMFERED

REVISIONS

ALT.	ZONE	DESCRIPTION	APPROVED & DATE
a		DIMENSION REVISED. VIEWS UPDATED.	19/3/24

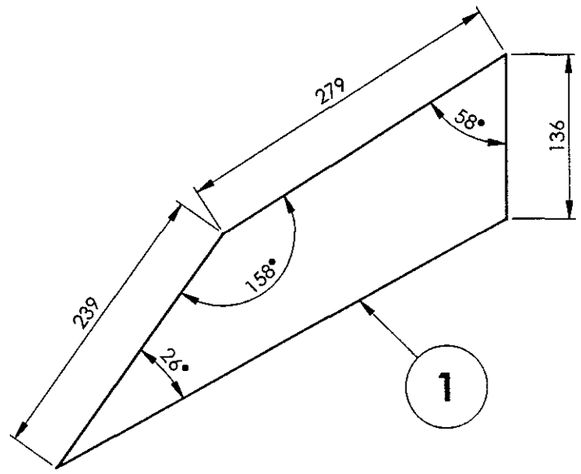

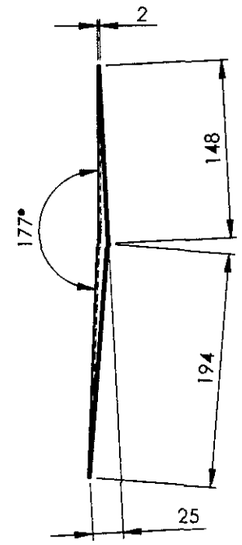

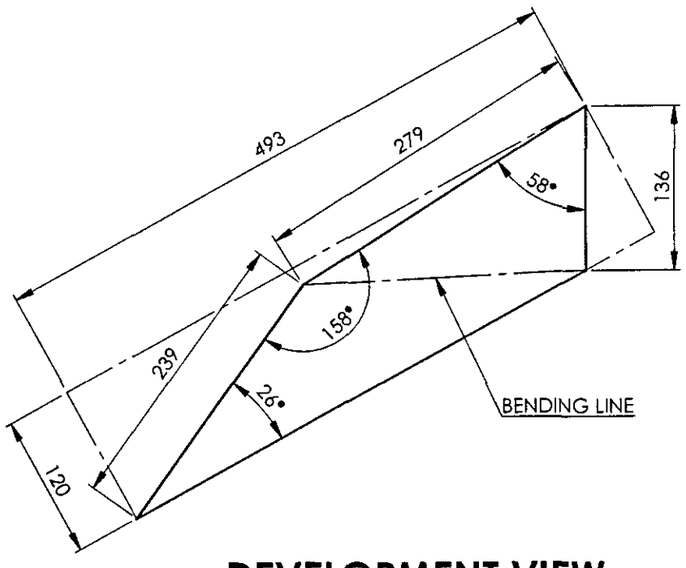

DEVELOPMENT VIEW

ALL DIMENSIONS ARE IN mm UNLESS OTHERWISE SPECIFIED. FOR UNTOLERANCED DIMENSIONS AND ROUGHNESS VALUES, REFER DRAWING NO ICF/STD-9-0-001.
ANY MANUAL ALTERATION SHALL AUTOMATICALLY RENDER THIS DRAWING INVALID. WELDING SYMBOLS ARE AS PER IS: 813-1986.

REF.DRG.NO.3 10113.0.20.200.144

DATE OF LATEST ALT.	DATE OF FIRST ISSUE	AME/SME
15-03-24	07-06-23	19/3/24

Default	DESCRIPTION	DIMENSIONS	ITEM NO.	REF. DRGS	MATL.SPEC.	WT/UNIT IN KGS	REMARKS
1	SIDE SHEET	2 x 119 x 493	1		RDSO/SPEC C-K201 X2CrNi12	0.613	

GROUP: 1-6 Roof Construction | SURFACE AREA IN Sq.m.:0.079 | WT/ASSY IN Kgs:0.613

SIDE SHEET

SCALE 1:5	SSE/D	S Pandiarajan
	CHD	
ALT. a	ALTD	E.SATHISH KUMAR
	DRN	E.SATHISH KUMAR

INDIAN RAILWAY STANDARDS
INTEGRAL COACH FACTORY, CHENNAI - 600038

SHEET 1 OF 1

AAE16687 A3

AAE16688

▽ ROUGH MACHINED	(01) ROUGH CLEANED
▽▽ FINISH MACHINED	(01b) BURRS REMOVED
▽▽▽ FINE FINISH MACHINED	(18) CHAMFERED

REVISIONS			
ALT.	ZONE	DESCRIPTION	APPROVED & DATE
a		DIMENSION REVISED. VIEWS UPDATED.	15/3/24

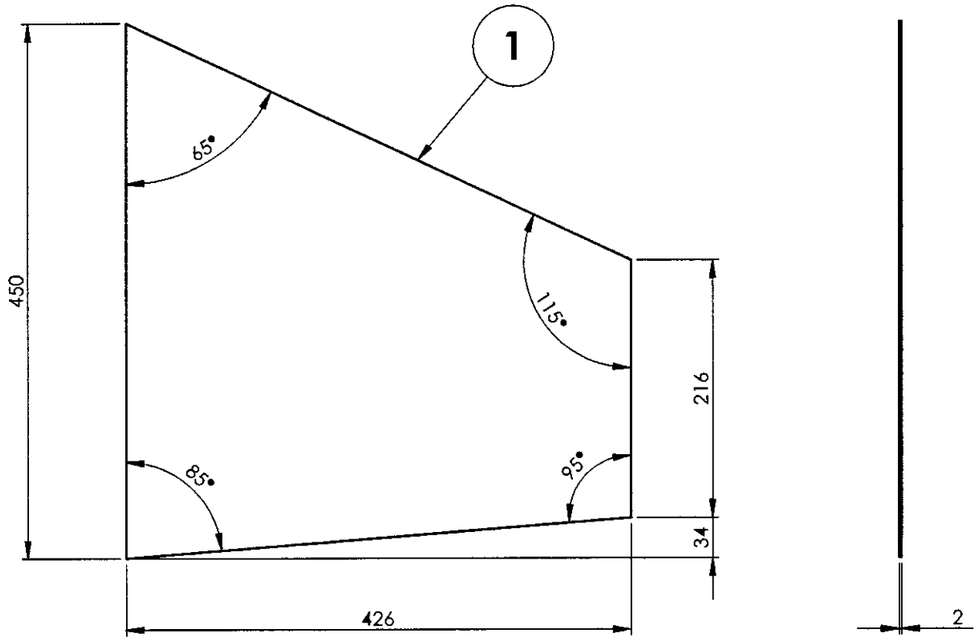

ALL DIMENSIONS ARE IN mm UNLESS OTHERWISE SPECIFIED. FOR UNTOLERANCED DIMENSIONS AND ROUGHNESS VALUES, REFER DRAWING NO ICF/STD-9-0-001.
ANY MANUAL ALTERATION SHALL AUTOMATICALLY RENDER THIS DRAWING INVALID. WELDING SYMBOLS ARE AS PER IS: 813-1986.

REF.DRG.NO.3 10113.0.20.200.141

1	BOTTOM SHEET	2 x 426 x 450	1		RDSO/SPEC C-K201 X2CrNi12	2.269	
Default	DESCRIPTION	DIMENSIONS	ITEM NO.	REF. DRGS	MATL.SPEC.	WT/UNIT IN KGS	REMARKS

GROUP: 1-6 Roof Construction | SURFACE AREA IN Sq.m.:0.287 | WT/ASSY IN Kgs:2.269

BOTTOM SHEET

SCALE 1:5	SSE/D	R Pandiyan
	CHD	
ALT. a	ALTD	E.SATHISH KUMAR
	DRN	E.SATHISH KUMAR

INDIAN RAILWAY STANDARDS
INTEGRAL COACH FACTORY, CHENNAI - 600038

SHEET 1 OF 1

AAE16688 | A3

15-03-24	07-06-23	15/3/24
DATE OF LATEST ALT.	DATE OF FIRST ISSUE	AME/SME

AAE16689

▽ ROUGH MACHINED	(01) ROUGH CLEANED		
▽▽ FINISH MACHINED	(01b) BURRS REMOVED		
▽▽▽ FINE FINISH MACHINED	(18) CHAMFERED		

REVISIONS

ALT.	ZONE	DESCRIPTION	APPROVED & DATE
a		DIMENSION REVISED. VIEWS UPDATED.	8/3/24

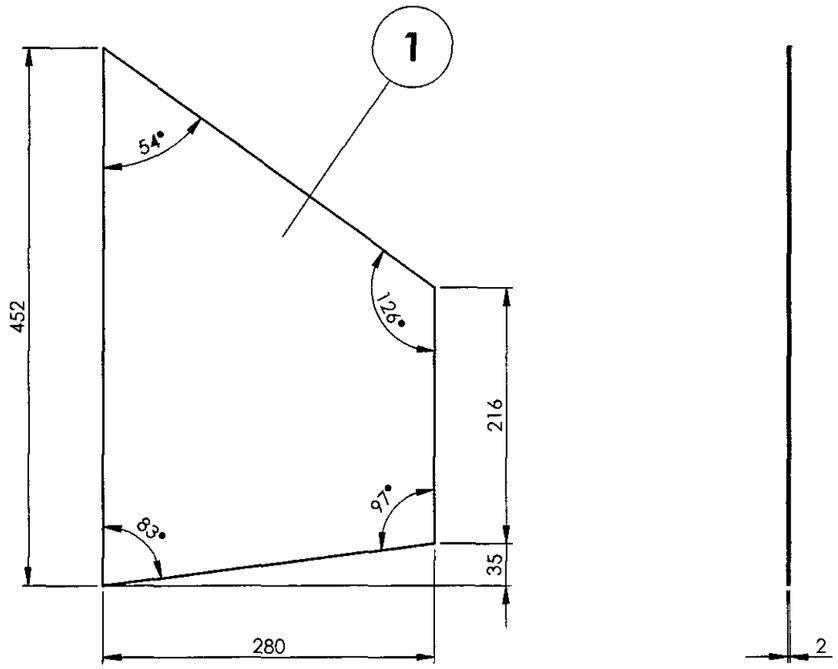

ALL DIMENSIONS ARE IN mm UNLESS OTHERWISE SPECIFIED. FOR UNTOLERANCED DIMENSIONS AND ROUGHNESS VALUES, REFER DRAWING NO ICF/STD-9-0-001.
ANY MANUAL ALTERATION SHALL AUTOMATICALLY RENDER THIS DRAWING INVALID. WELDING SYMBOLS ARE AS PER IS: 813-1986.

REF.DRG.NO.3 10113.0.20.200.139

Default	DESCRIPTION	DIMENSIONS	ITEM NO.	REF. DRGS	MATL.SPEC.	WT/UNIT IN KGS	REMARKS
1	TOP SHEET	2 x 280x 452	1		RDSO/SPEC C-K201 X2CrNi12	1.492	

GROUP: 1-6 Roof Construction | SURFACE AREA IN Sq.m.:0.189 | WT/ASSY IN Kgs: 1.492

TOP SHEET

SCALE 1:5	SSE/D	L. Dandiwagalu
	CHD	
ALT. a	ALTD	E.SATHISH KUMAR
	DRN	E.SATHISH KUMAR

INDIAN RAILWAY STANDARDS
INTEGRAL COACH FACTORY, CHENNAI - 600038

SHEET 1 OF 1

AAE16689 A3

DATE OF LATEST ALT.	DATE OF FIRST ISSUE	AME/SME
15-03-24	07-06-23	8/3/24

AAF16122

▽ ROUGH MACHINED	(01) ROUGH CLEANED
▽▽ FINISH MACHINED	(01b) BURRS REMOVED
▽▽▽ FINE FINISH MACHINED	(18) CHAMFERED

REVISIONS			
ALT.	ZONE	DESCRIPTION	APPROVED & DATE
a		CUTAWAY ADDED AND VIEWS UPDATED.	

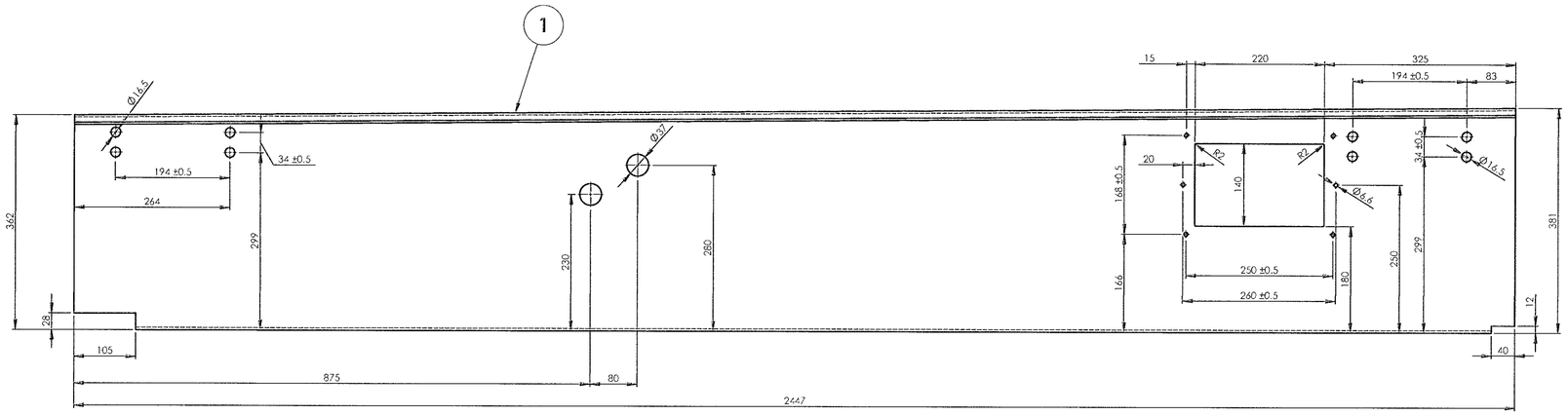

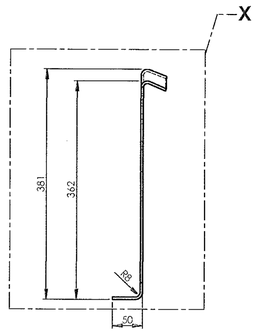

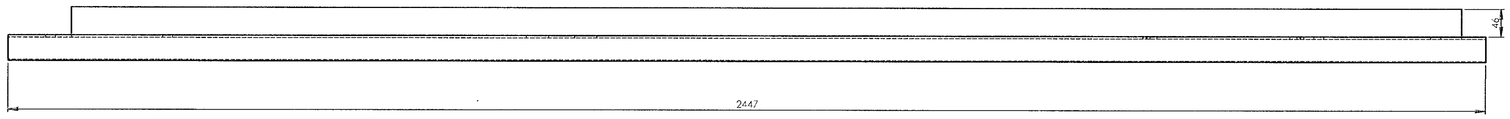

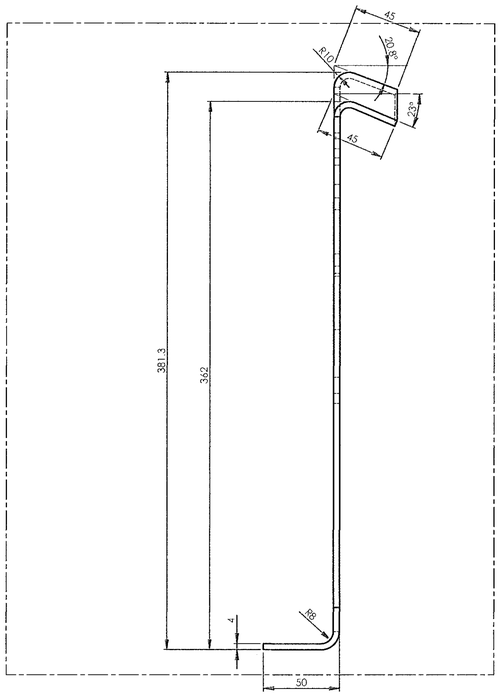

DETAIL X
SCALE 1 : 2

ALL DIMENSIONS ARE IN mm UNLESS OTHERWISE SPECIFIED. FOR UNTOLERANCED DIMENSIONS AND ROUGHNESS VALUES, REFER DRAWING NO ICF/STD-9-0-001.
ANY MANUAL ALTERATION SHALL AUTOMATICALLY RENDER THIS DRAWING INVALID. WELDING SYMBOLS ARE AS PER IS 813-1986. WEIGHT GIVEN IN DRAWING IS FOR INDICATIVE PURPOSE ONLY.

QTY	DESCRIPTION	DIMENSIONS	ITEM NO.	REF. DRGS	MATL.SPEC.	WT/UNIT IN KGS	REMARKS
1	MEMBER	4 x 459 x 2447	1		RDSO/SPEC C-K201 X2 Cr Ni 12	33.743	

GROUP: 1-6 Roof Construction | SURFACE AREA IN Sq.m.: 2.139 | WT/ASSY IN Kgs:

MEMBER

SCALE 1:5	SSE/D	
	CHD	
ALT. a	ALTD	E.SATHISH KUMAR
	DRN	E.SATHISH KUMAR

INDIAN RAILWAY STANDARDS
INTEGRAL COACH FACTORY, CHENNAI - 600038

SHEET 1 OF 1

AAF16122 | **A1**

DATE OF LATEST ALT.	DATE OF FIRST ISSUE	AME/SME
12/01/26	04/09/75	

REF.DRG.NO.

AAF16158

▽ ROUGH MACHINED	(01) ROUGH CLEANED		
▽▽ FINISH MACHINED	(11b) BURRS REMOVED		
▽▽▽ FINE FINISH MACHINED	(18) CHAMFERED		

REVISIONS			
ALT.	ZONE	DESCRIPTION	APPROVED & DATE

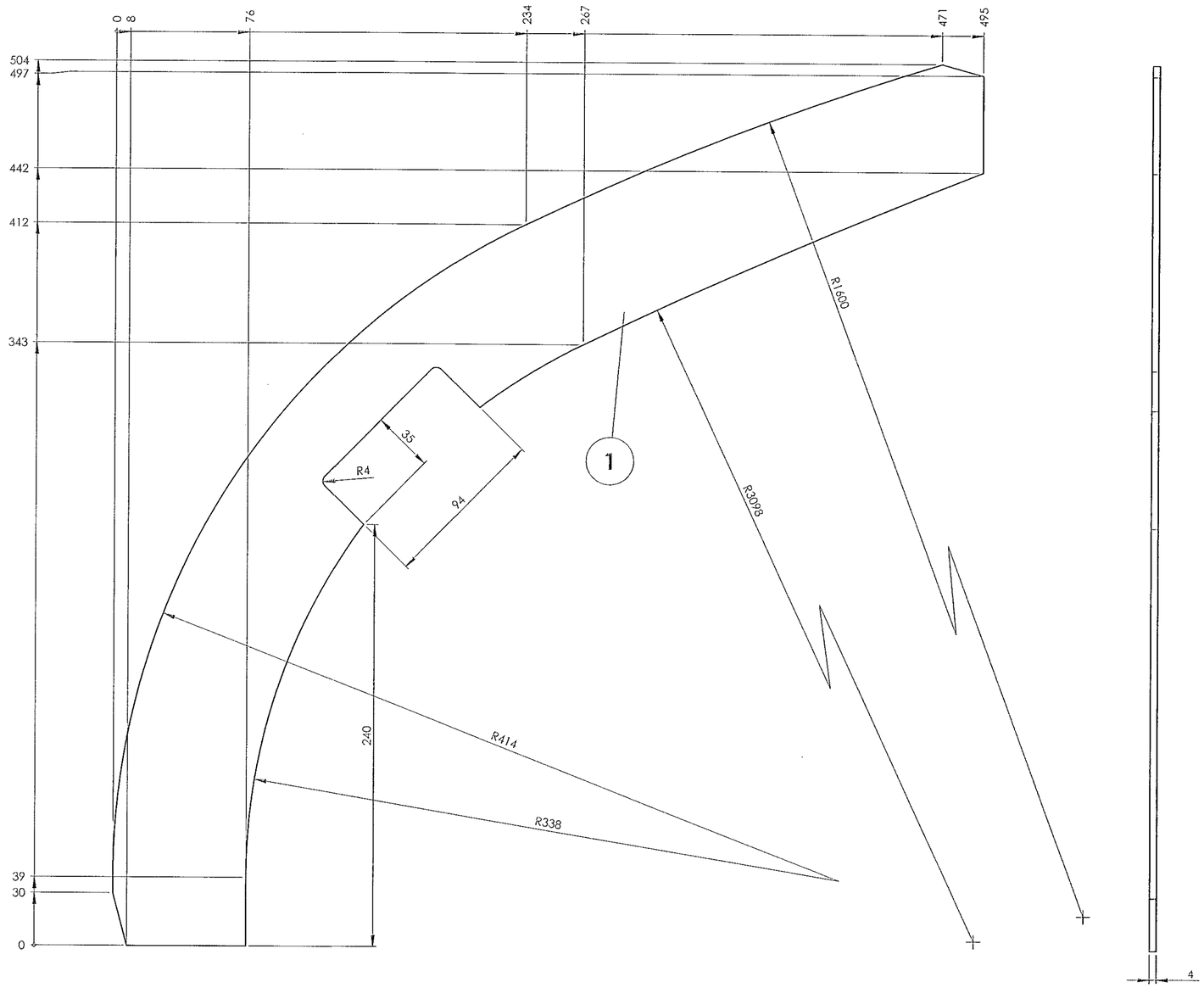

ALL DIMENSIONS ARE IN mm UNLESS OTHERWISE SPECIFIED. FOR UNTOLERANCED DIMENSIONS AND ROUGHNESS VALUES, REFER DRAWING NO ICF/STD-9-0-001.
ANY MANUAL ALTERATION SHALL AUTOMATICALLY RENDER THIS DRAWING INVALID. WELDING SYMBOLS ARE AS PER IS:813-1986.

QTY	DESCRIPTION	DIMENSIONS	ITEM NO.	REF. DRGS	MATL.SPEC.	WT/UNIT IN KGS	REMARKS
1	ROOF ARCH	4 x 495 x 505	1		RDSO/SPEC C-K201 X2CrNi12	1.623	

GROUP: 1-6 Roof Construction | SURFACE AREA IN Sq.m.: 0.108 | WT/ASSY IN Kgs: 1.623

ROOF ARCH

SCALE 1:2	SSE/D	
	CHD	
ALT -	ALTD	
	DRN	E.SATHISH KUMAR

INDIAN RAILWAY STANDARDS
INTEGRAL COACH FACTORY, CHENNAI - 600038

SHEET 1 OF 1

AAF16158 A2

DATE OF LATEST ALT.	DATE OF FIRST ISSUE	AME/SME
	04/09/25	

REF.DRG.NO.2 10113.0.20.210.103

AAF16159

▽ ROUGH MACHINED	(01) ROUGH CLEANED		
▽▽ FINISH MACHINED	(01a) BURRS REMOVED		
▽▽▽ FINE FINISH MACHINED	(16) CHAMFERED		

REVISIONS			
ALT.	ZONE	DESCRIPTION	APPROVED & DATE

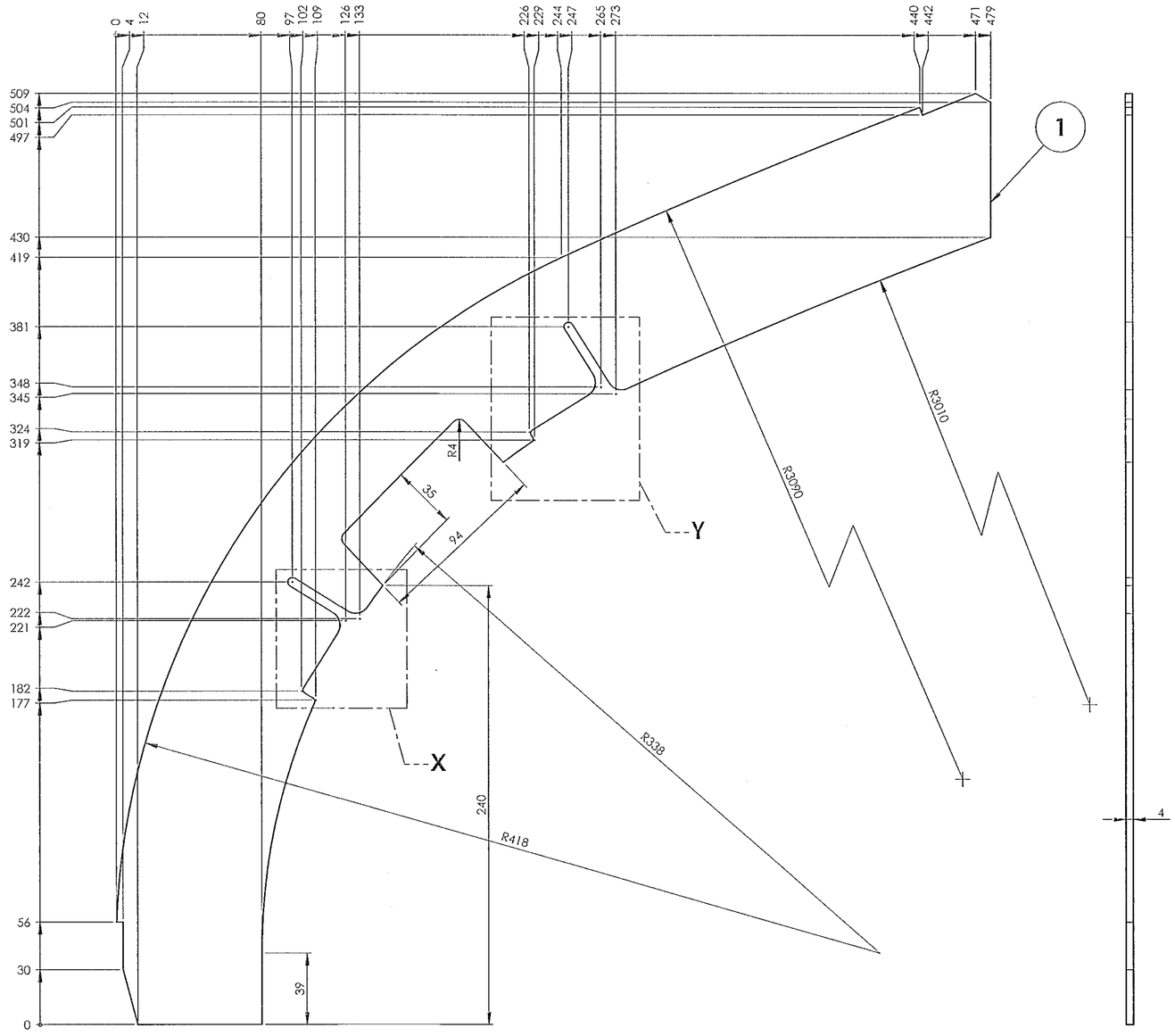

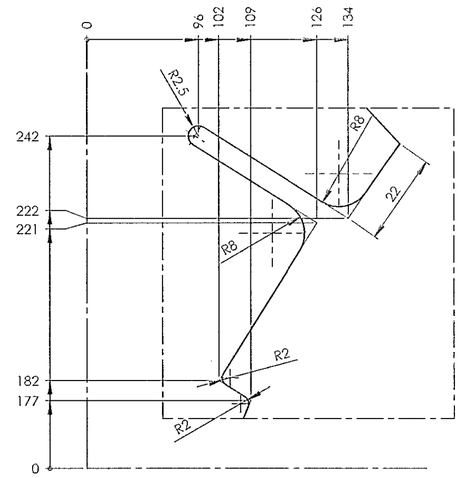

DETAIL X
SCALE 1 : 1

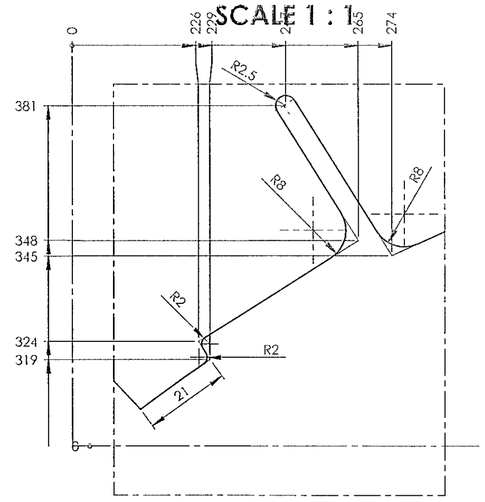

DETAIL Y
SCALE 1 : 1

ALL DIMENSIONS ARE IN mm UNLESS OTHERWISE SPECIFIED. FOR UNTOLERANCED DIMENSIONS AND ROUGHNESS VALUES, REFER DRAWING NO. ICF/STD-9-0-001.
ANY MANUAL ALTERATION SHALL AUTOMATICALLY RENDER THIS DRAWING INVALID. WELDING SYMBOLS ARE AS PER EN ISO 2553. WEIGHT GIVEN IN DRAWING IS FOR INDICATIVE PURPOSE ONLY

QTY	DESCRIPTION	DIMENSIONS	ITEM NO.	REF. DRGS	MATL.SPEC.	WT/UNIT IN KGS	REMARKS
1	ROOF ARCH	4 x 479 x 508.5	1		RDSO/SPEC C-K201 X2CrNi12	1.660	

GROUP: 1-6 Roof Construction | SURFACE AREA IN Sq.m.: 0.111 | WT/ASSY IN Kgs:

ROOF ARCH

SCALE 1:2 | SSE/D | CHD | ALT - | ALTD | DRN | E.SATHISH KUMAR

INDIAN RAILWAY STANDARDS
INTEGRAL COACH FACTORY, CHENNAI - 600038

SHEET 1 OF 1

AAF16159 | A2

REF.DRG.NO.2 10113.0.20.210.112

DATE OF LATEST ALT.	DATE OF FIRST ISSUE	AME/SME
	04/09/25	

AAF16160

▽ ROUGH MACHINED	(01) ROUGH CLEANED
▽▽ FINISH MACHINED	(01b) BURRS REMOVED
▽▽▽ FINE FINISH MACHINED	(18) CHAMFERED

REVISIONS			
ALT.	ZONE	DESCRIPTION	APPROVED & DATE

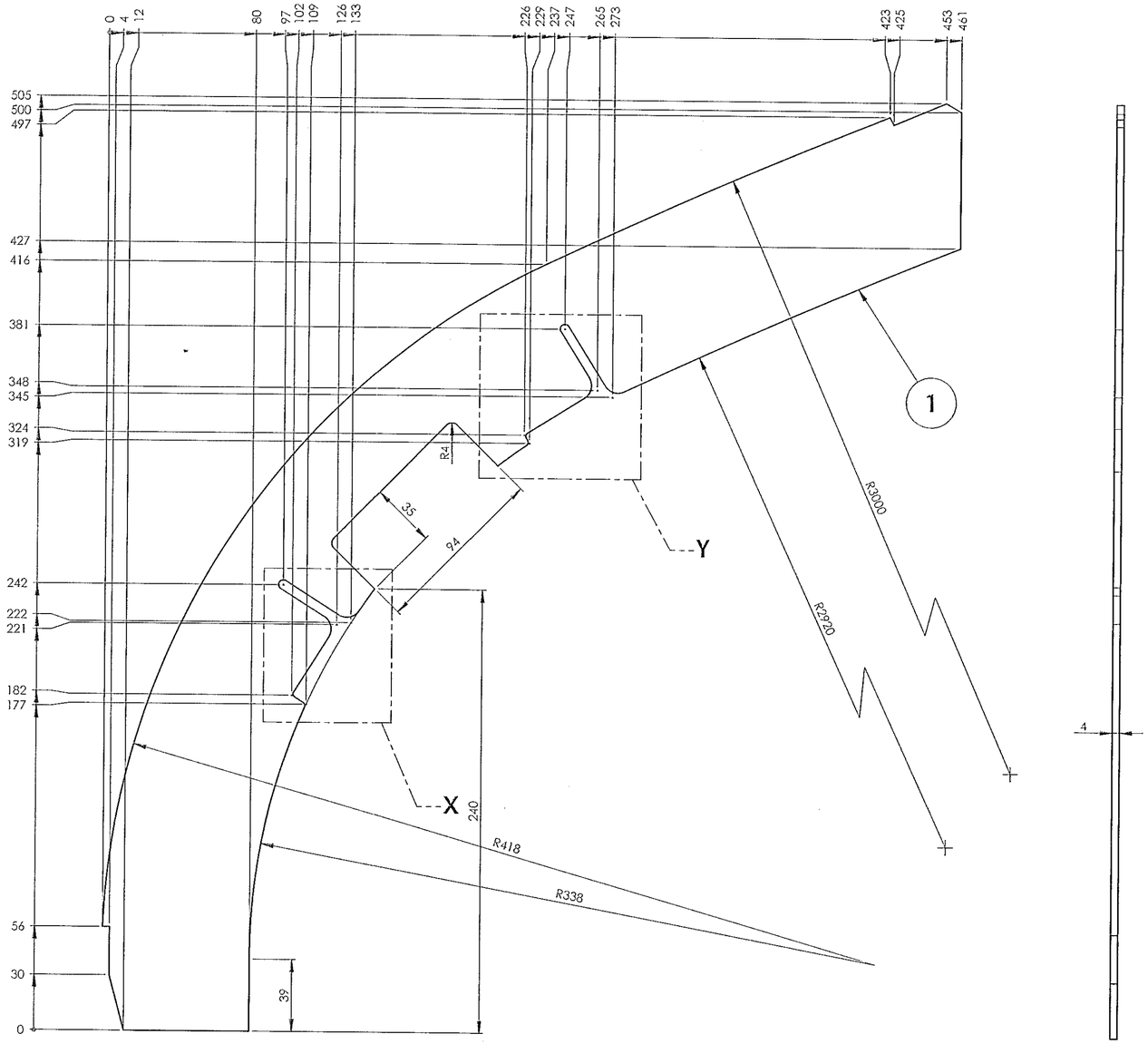

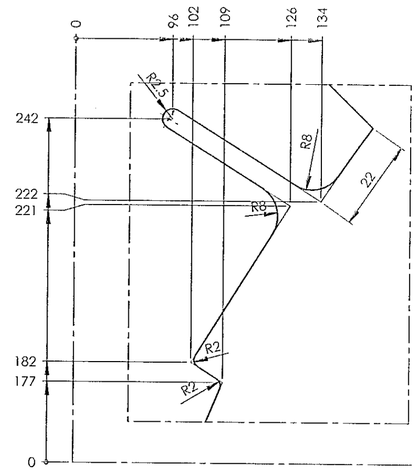

DETAIL X
SCALE 1 : 1

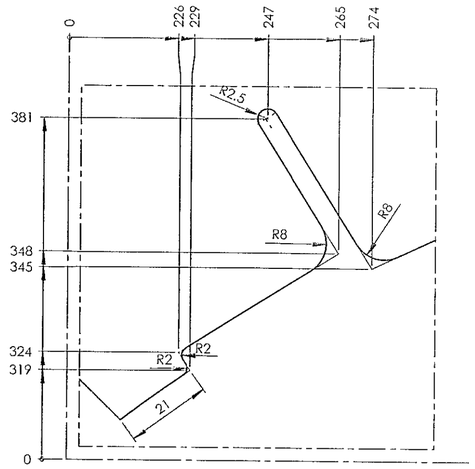

DETAIL Y
SCALE 1 : 1

ALL DIMENSIONS ARE IN mm UNLESS OTHERWISE SPECIFIED. FOR UNTOLERANCED DIMENSIONS AND ROUGHNESS VALUES, REFER DRAWING NO ICF/STD-9-0-001.
ANY MANUAL ALTERATION SHALL AUTOMATICALLY RENDER THIS DRAWING INVALID. WELDING SYMBOLS ARE AS PER EN ISO 2553. WEIGHT GIVEN IN DRAWING IS FOR INDICATIVE PURPOSE ONLY

QTY	DESCRIPTION	DIMENSIONS	ITEM NO.	REF. DRGS	MATL.SPEC.	WT/UNIT IN KGS	REMARKS
1	ROOF ARCH	4 x 462 x 505	1		RDSO/SPEC C-K201 X2CrNi12	1.614	

GROUP: 1-6 Roof Construction

SURFACE AREA IN Sq.m.:0.108

WT/ASSY IN Kgs:

ROOF ARCH

SCALE 1:2	SSE/D	
	CHD	
ALT -	ALTD	
	DRN	E.SATHISH KUMAR

INDIAN RAILWAY STANDARDS
INTEGRAL COACH FACTORY, CHENNAI - 600038

SHEET 1 OF 1

AAF16160 A2

DATE OF LATEST ALT.	DATE OF FIRST ISSUE	AME/SME
	04/09/25	

REF.DRG.NO.

AAF16161

▽ ROUGH MACHINED	(01) ROUGH CLEANED
▽▽ FINISH MACHINED	(01b) BURRS REMOVED
▽▽▽ FINE FINISH MACHINED	(18) CHAMFERED

REVISIONS			
ALT.	ZONE	DESCRIPTION	APPROVED & DATE

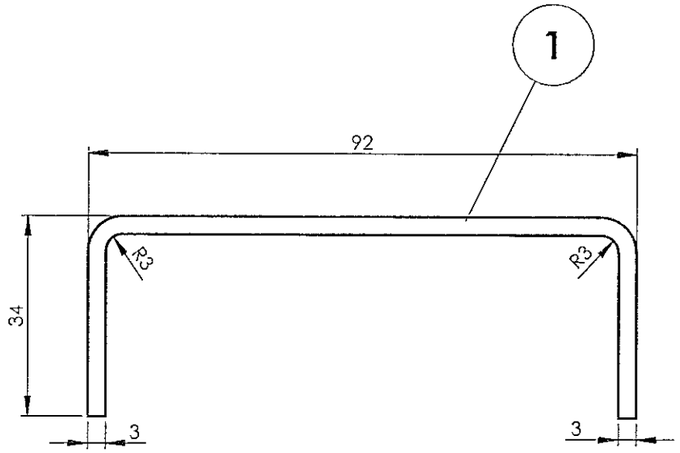

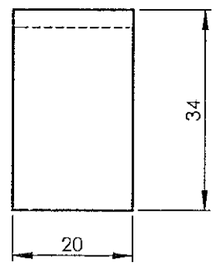

ALL DIMENSIONS ARE IN mm UNLESS OTHERWISE SPECIFIED. FOR UNTOLERANCED DIMENSIONS AND ROUGHNESS VALUES, REFER DRAWING NO ICF/STD-9-0-001.
ANY MANUAL ALTERATION SHALL AUTOMATICALLY RENDER THIS DRAWING INVALID. WELDING SYMBOLS ARE AS PER EN ISO 2553.
WEIGHT GIVEN IN DRAWING IS FOR INDICATIVE PURPOSE ONLY

QTY	DESCRIPTION	DIMENSIONS	ITEM NO.	REF. DRGS	MATL.SPEC.	WT/UNIT IN KGS	REMARKS
1	BACK PIECE	3x20x148	1		RDSO SPEC C-K201 X2 Cr Ni 12	0.07	

GROUP: 1-6 Roof Construction

SURFACE AREA IN Sq.m.:

WT/ASSY IN Kgs:

BACK PIECE

SCALE 1:1	SSE/D	
	CHD	
ALT. -	ALTD	
	DRN	VIJAYAKUMAR R

INDIAN RAILWAY STANDARDS

INTEGRAL COACH FACTORY, CHENNAI - 600038

SHEET 1 OF 1

AAF16161 A3

REF.DRG.NO.-

DATE OF LATEST ALT.	DATE OF FIRST ISSUE	AME/SME
-	04/09/25	

AAF16201

▽ ROUGH MACHINED	(01) ROUGH CLEANED
▽▽ FINISH MACHINED	(01e) BURRS REMOVED
▽▽▽ FINE FINISH MACHINED	(18) CHAMFERED

REVISIONS			
ALT.	ZONE	DESCRIPTION	APPROVED & DATE

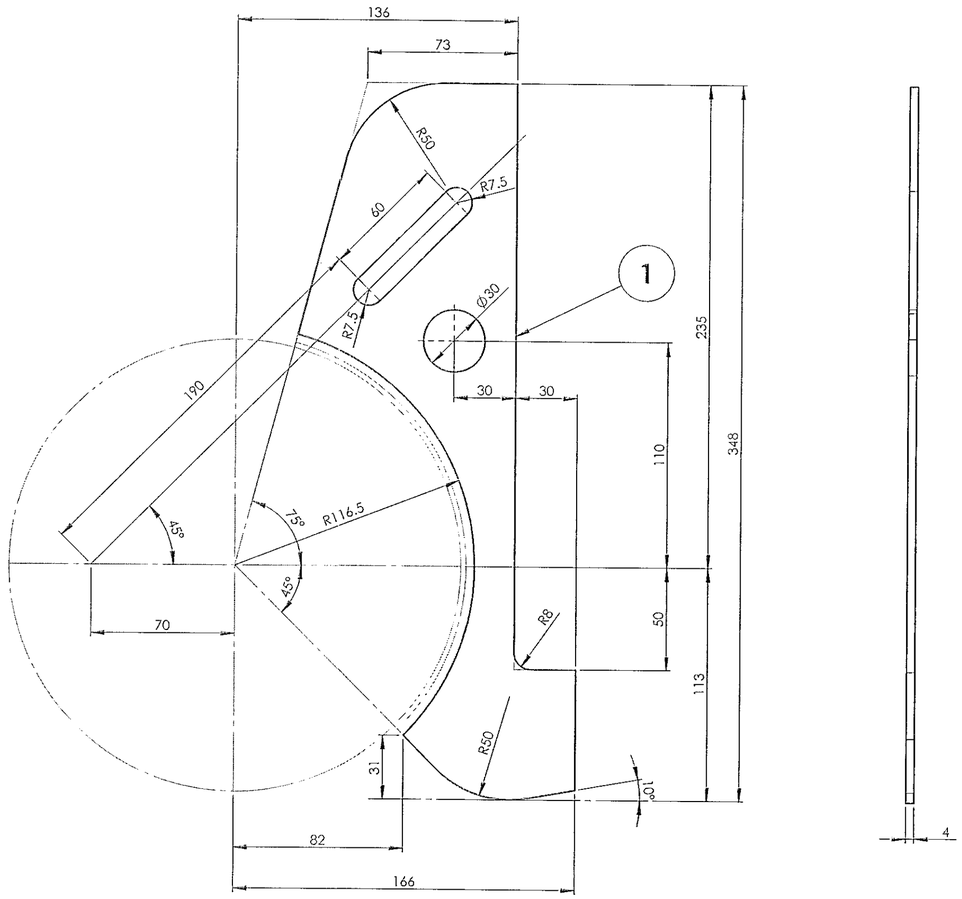

ALL DIMENSIONS ARE IN mm UNLESS OTHERWISE SPECIFIED. FOR UNTOLERANCED DIMENSIONS AND ROUGHNESS VALUES, REFER DRAWING NO ICF/STD-9-0-001.
ANY MANUAL ALTERATION SHALL AUTOMATICALLY RENDER THIS DRAWING INVALID. WELDING SYMBOLS ARE AS PER IS:813-1986. WEIGHT GIVEN IN DRAWING IS FOR INDICATIVE PURPOSE ONLY

QTY	DESCRIPTION	DIMENSIONS	ITEM NO.	REF. DRGS	MATL.SPEC.	WT/UNIT IN KGS	REMARKS
1	PLATE	4 x 136 x 348	1		RDSO/SPEC C-K201 X2CrNi12	0.610	

GROUP: 1-6 Roof Construction

SURFACE AREA IN Sq.m.: 0.043

WT/ASSY IN Kgs:

PLATE

SCALE 1:2	SSE/D	
	CHD	
ALT -	ALTD	
	DRN	E.SATHISH KUMAR

INDIAN RAILWAY STANDARDS
INTEGRAL COACH FACTORY, CHENNAI - 600038

SHEET 1 OF 1

AAF16201 A2

DATE OF LATEST ALT.	DATE OF FIRST ISSUE	AME/SME
	04/09/25	

REF.DRG.NO.-

AAF16202

▽ ROUGH MACHINED	(01) ROUGH CLEANED		
▽▽ FINISH MACHINED	(01e) BURRS REMOVED		
▽▽▽ FINE FINISH MACHINED	(18) CHAMFERED		

REVISIONS			
ALT.	ZONE	DESCRIPTION	APPROVED & DATE

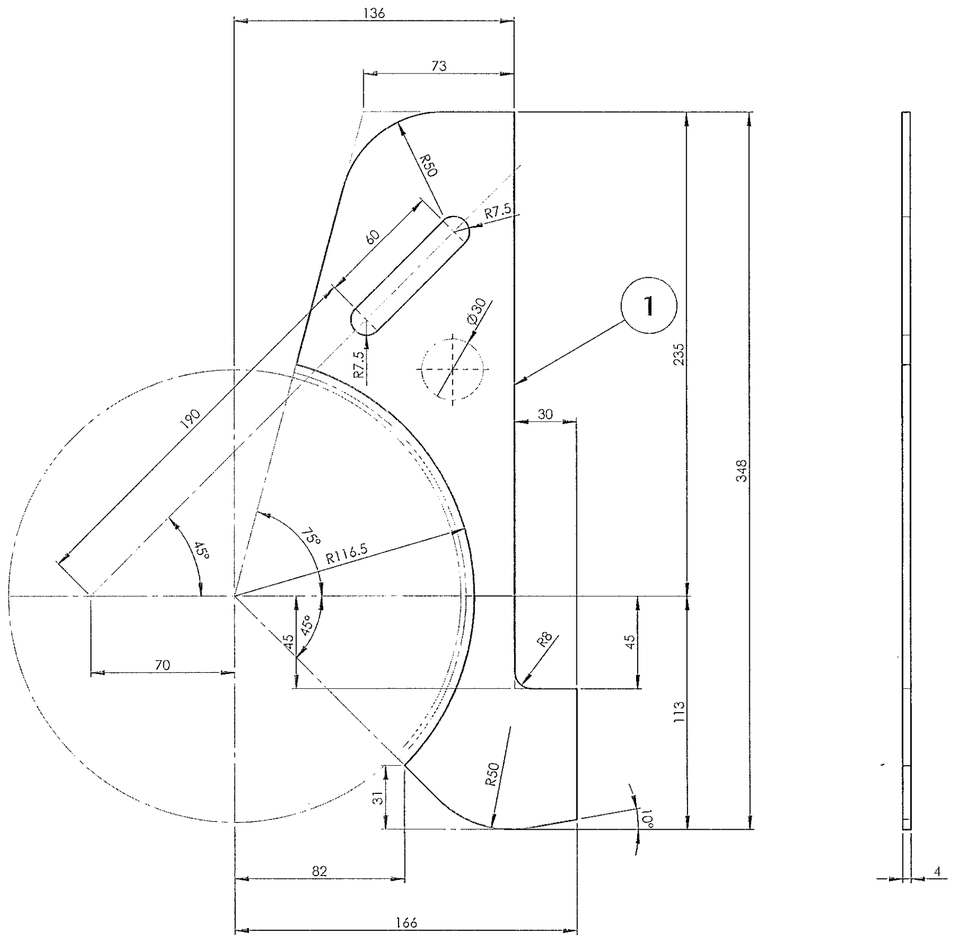

ALL DIMENSIONS ARE IN mm UNLESS OTHERWISE SPECIFIED. FOR UNTOLERANCED DIMENSIONS AND ROUGHNESS VALUES, REFER DRAWING NO. ICF/STD-9-0-001.
ANY MANUAL ALTERATION SHALL AUTOMATICALLY RENDER THIS DRAWING INVALID. WELDING SYMBOLS ARE AS PER IS:813-1986.

QTY	DESCRIPTION	DIMENSIONS	ITEM NO.	REF. DRGS	MATL.SPEC.	WT/UNIT IN KGS	REMARKS
1	PLATE	4 x 136 x 348	1		RDSO/SPEC C-K201 X2CrNi12	0.637	

GROUP: 1-6 Roof Construction | SURFACE AREA IN Sq.m.: 0.044 | WT/ASSY IN Kgs: 0.715

PLATE

SCALE 1:2 | SSE/D | CHD | ALT - | ALTD | DRN: E.SATHISH KUMAR

INDIAN RAILWAY STANDARDS
INTEGRAL COACH FACTORY, CHENNAI - 600038

SHEET 1 OF 1

AAF16202 | A2

REF.DRG.NO.-

DATE OF LATEST ALT.	DATE OF FIRST ISSUE	AME/SME
	04/09/25	

AAF16292

▽ ROUGH MACHINED	(01) ROUGH CLEANED
▽▽ FINISH MACHINED	(01b) BURRS REMOVED
▽▽▽ FINE FINISH MACHINED	(18) CHAMFERED

REVISIONS			
ALT.	ZONE	DESCRIPTION	APPROVED & DATE

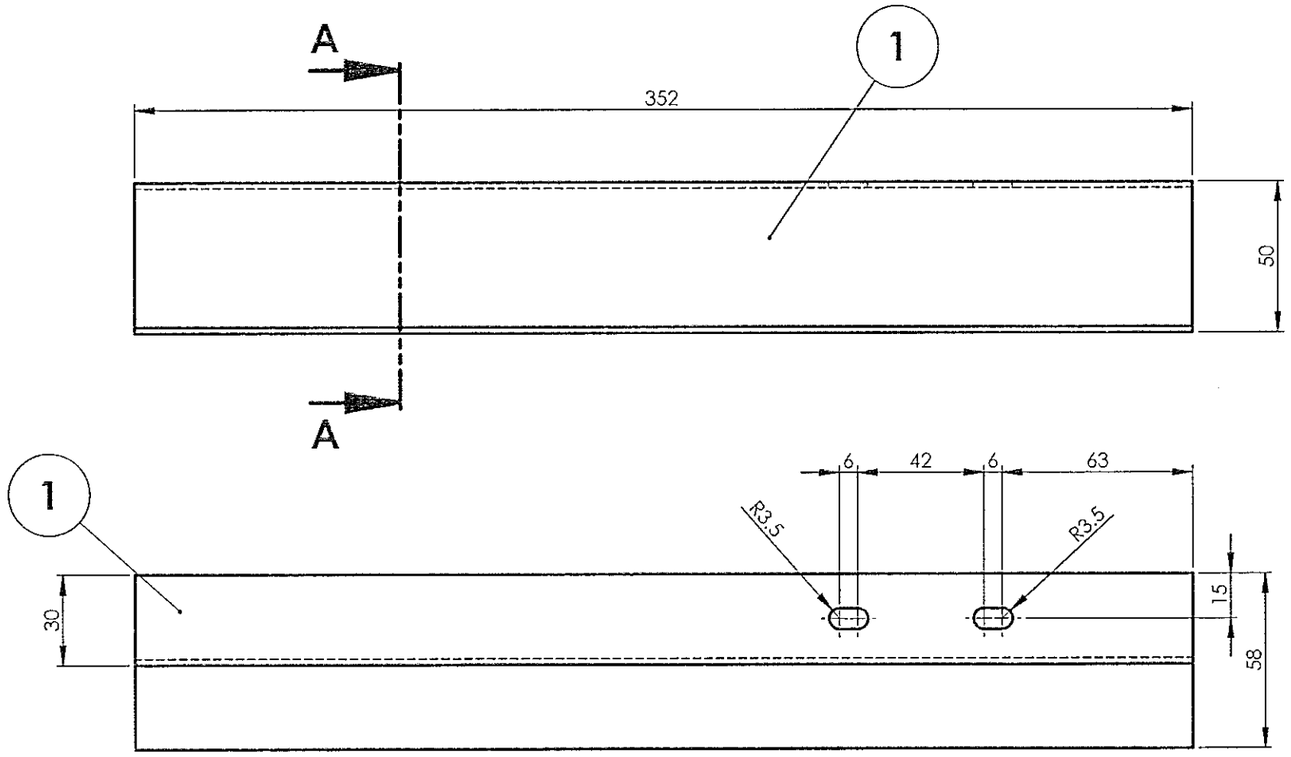

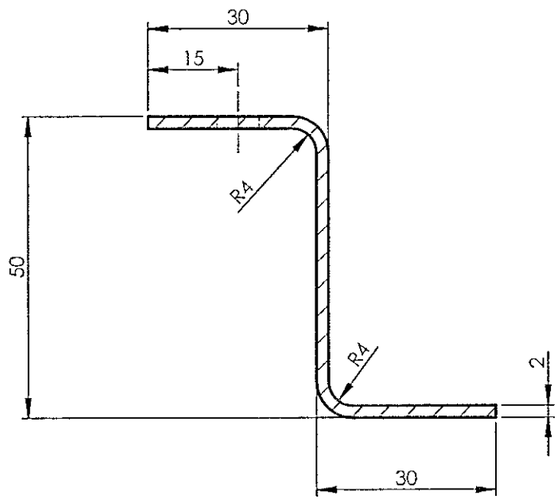

SECTION A-A
SCALE 1 : 1

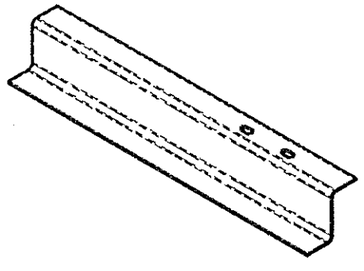

ISOMETRIC VIEW

ALL DIMENSIONS ARE IN mm UNLESS OTHERWISE SPECIFIED. FOR UNTOLERANCED DIMENSIONS AND ROUGHNESS VALUES, REFER DRAWING NO ICF/STD-9-0-001.
ANY MANUAL ALTERATION SHALL AUTOMATICALLY RENDER THIS DRAWING INVALID. WELDING SYMBOLS ARE AS PER EN ISO 2553.
WEIGHT GIVEN IN DRAWING IS FOR INDICATIVE PURPOSE ONLY

QTY	DESCRIPTION	DIMENSIONS	ITEM NO.	REF. DRGS	MATL.SPEC.	WT/UNIT IN KGS	REMARKS
1	Z MEMBER	2 x 102 x 352	1		RDSO/SPEC C-K201 X2CrNi12	0.57	

GROUP: 1-6 Roof Construction | SURFACE AREA IN Sq.m.:0.07 | WT/ASSY IN Kgs:

Z MEMBER (LH)

SCALE 1:2	SSE/D	
	CHD	
ALT. -	ALTD	
	DRN	Amal George

INDIAN RAILWAY STANDARDS
INTEGRAL COACH FACTORY, CHENNAI - 600038

SHEET 1 OF 1

AAF16292 A3

DATE OF LATEST ALT.	DATE OF FIRST ISSUE	AME/SME
	10-11-2025	

REF.DRG.NO.LE16106 alt-a

AAF16293

▽ ROUGH MACHINED	(01) ROUGH CLEANED
▽▽ FINISH MACHINED	(01b) BURRS REMOVED
▽▽▽ FINE FINISH MACHINED	(18) CHAMFERED

REVISIONS			
ALT.	ZONE	DESCRIPTION	APPROVED & DATE

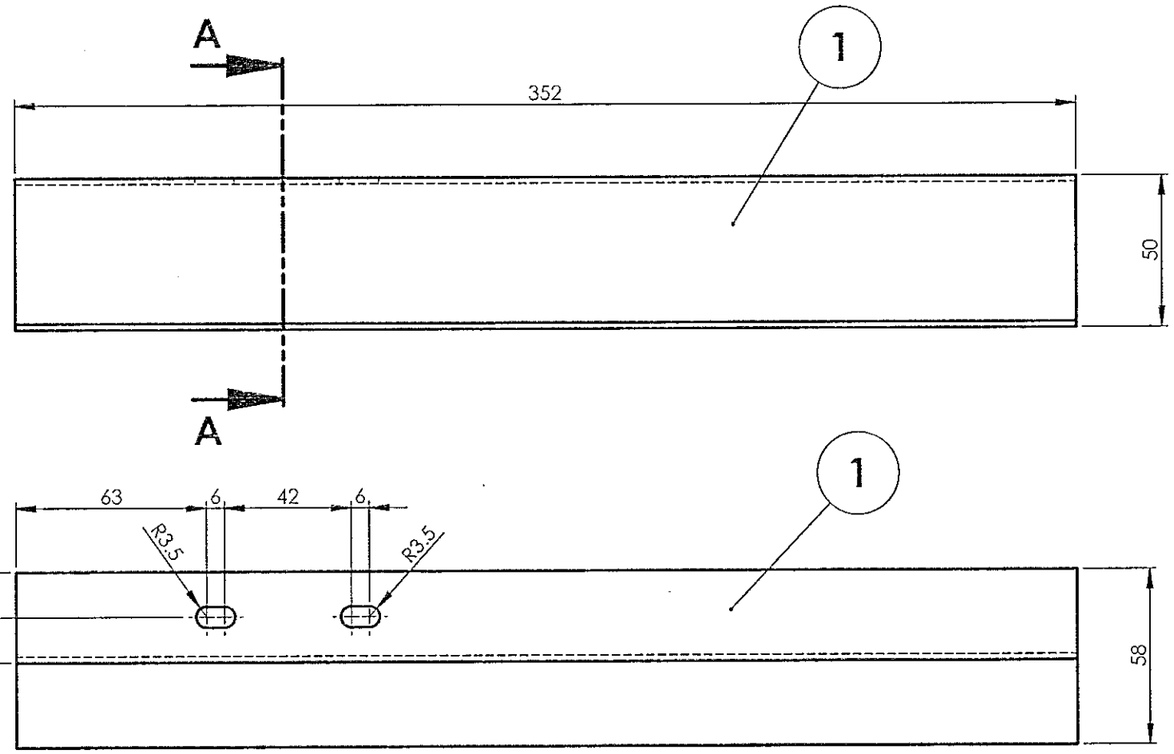

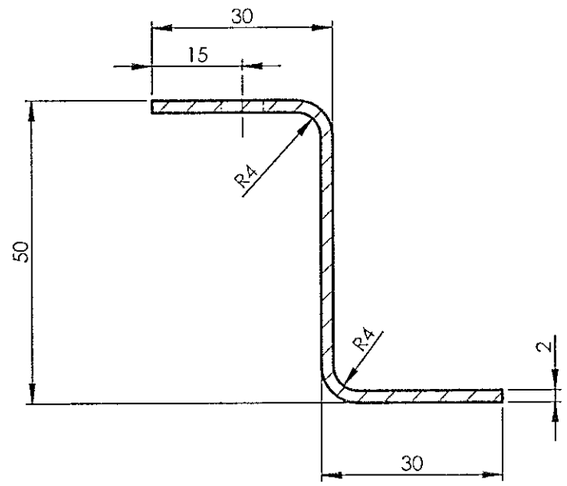

SECTION A-A
SCALE 1 : 1

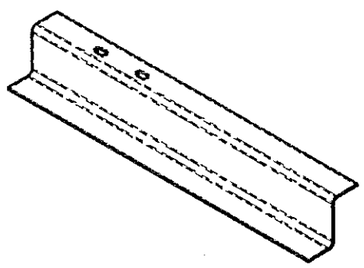

ISOMETRIC VIEW

ALL DIMENSIONS ARE IN mm UNLESS OTHERWISE SPECIFIED. FOR UNTOLERANCED DIMENSIONS AND ROUGHNESS VALUES, REFER DRAWING NO ICF/STD-9-0-001.
ANY MANUAL ALTERATION SHALL AUTOMATICALLY RENDER THIS DRAWING INVALID. WELDING SYMBOLS ARE AS PER EN ISO 2553.
WEIGHT GIVEN IN DRAWING IS FOR INDICATIVE PURPOSE ONLY

QTY	DESCRIPTION	DIMENSIONS	ITEM NO.	REF. DRGS	MATL.SPEC.	WT/UNIT IN KGS	REMARKS
1	Z MEMBER	2 x 102 x 352	1		RDSO/SPEC C-K201 X2CrNi12	0.57	

GROUP: 1-6 Roof Construction | SURFACE AREA IN Sq.m.:0.07 | WT/ASSY IN Kgs:

Z- MEMBER (RH)

SCALE 1:2	SSE/D	
	CHD	
ALT.	ALTD	
	DRN	Amal George

INDIAN RAILWAY STANDARDS
INTEGRAL COACH FACTORY, CHENNAI - 600038

SHEET 1 OF 1

AAF16293 | A3

DATE OF LATEST ALT.	DATE OF FIRST ISSUE	AME/SME
	10-11-2025	

REF.DRG.NO.LE16106 alt-a

ICF/J&T/MISC-2627

▽	ROUGH MACHINED
▽▽	FINISH MACHINED
▽▽▽	FINE FINISH MACHINED

ALTERATIONS

ⓐ 06-06-2017
① PACKING CONDITION FOR LHB OTHER BUILDS ADDED.
DN SSE/D

ⓑ DATE:04-03-22
JOB NO.681/21-22
1.NOTE 9 ADDED.
KP SSE/J&T

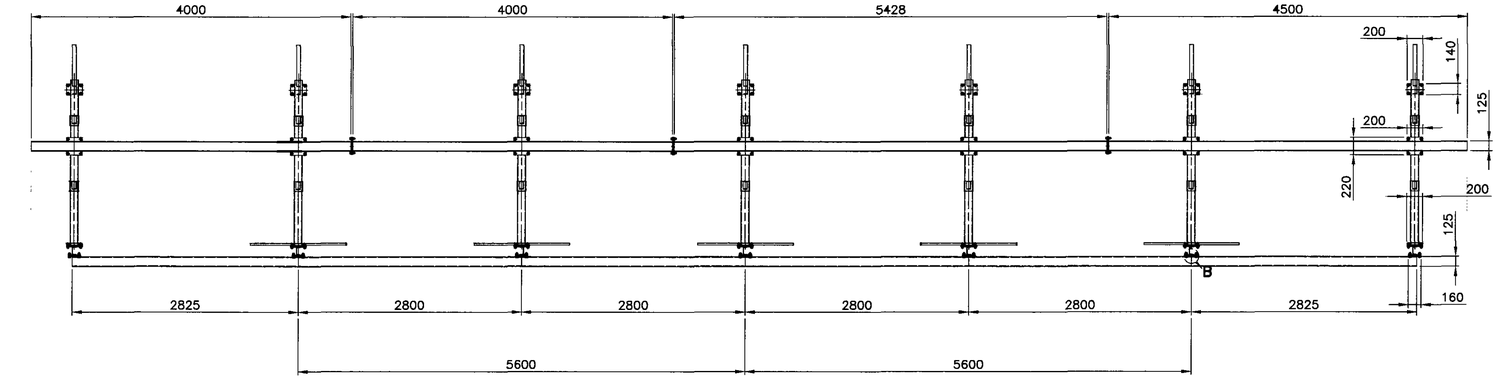

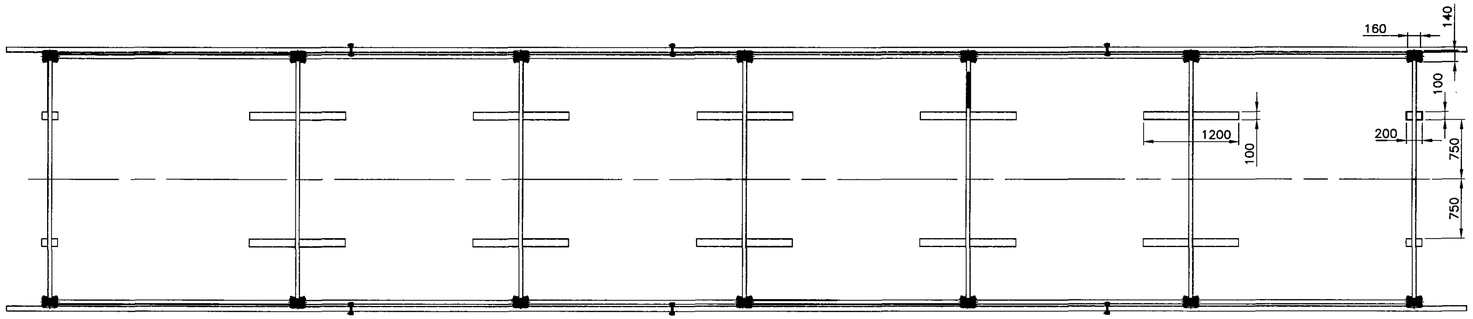

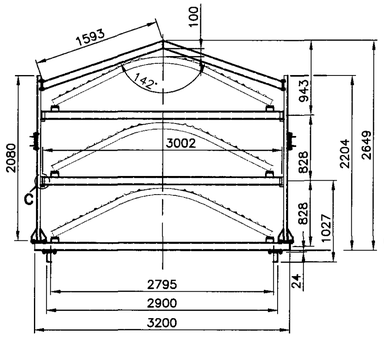

FOR LHB 3 TIER

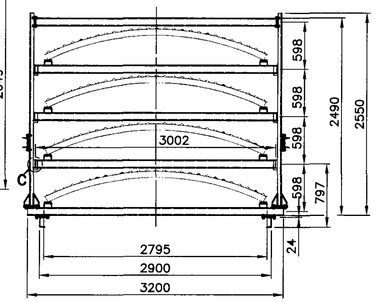

FOR LHB OTHER BUILDS

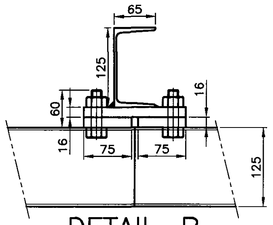

DETAIL-B
SCALE 1:5

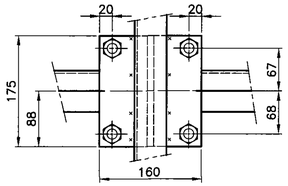

NOTE:

1. DIMENSIONS SHOWN ARE INDICATIVE ONLY.
2. FRAME TO BE FABRICATED FROM MS CHANNELS AND I-BEAM WITH BOLTS AND NUTS FOR EASY DISMANTLING.
3. FRAME TO BE OF ADEQUATE STRENGTH FOR TRANSPORTING AND LIFTING.
4. PACKING SHALL BE SUCH THAT, ROOF SHALL NOT GET DAMAGED DURING TRANSPORTING AND LIFTING.
5. IN ADDITION TO THE CLAMPING ARRGT. PROVIDED, SUITABLE BANDS ARE TO BE USED FOR CLAMPING THE ROOF WITH THE FRAME STRUCTURE AT VARIOUS LOCATIONS.
6. RUBBER OR WOOD TO BE PROVIDED AT THE CONTACT SURFACES AND ARE TO BE GLUED OR SCREWED.
7. SUITABLE NAME PLATE WITH MANUFACTURER'S NAME, MONTH AND YEAR OF MANUFACTURE TO BE FIXED ON THE FRAME.
8. PACKING TO BE OPENED AT THE TIME OF ASSEMBLY AND THE FRAME STRUCTURE IS TO BE TAKEN AWAY BY THE SUPPLIER, AFTER THE ASSEMBLIES ARE TAKEN FOR PRODUCTION.
9. ALL THREADED HOLES OF ROOF TO BE PLUGGED WITH PLASTIC DUMMY SCREWS TO AVOID DAMAGE OF THREADS.

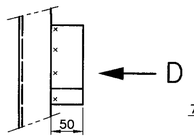

DETAIL-C
SCALE 1:5

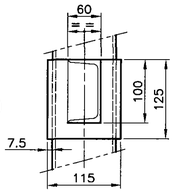

VIEW-D

THE PACKING FRAMES/STRUCTURES ARE TO BE TAKEN BACK BY THE SUPPLIER FROM ICF PREMISES AFTER THE COMPONENTS ARE TAKEN FOR PRODUCTION

NO. OFF	DESCRIPTION & DIMENSIONS	ITEM	REF. DRGS.	MAT.& SPEC	REMARKS
	CADFILE:-\\10.53.12.205\JIG&TOOL\J&T-CAD\MIS\MIS_2627_b.DWG			SUPERSEDED BY:	

SUPERSEDES:

PACKING CONDITION
FOR
LHB ROOF

SCALE 1:40	SSE/D	
	CHD	
	DRN	D.Nagarajan
	CAD	
ALT	a b	

INTEGRAL COACH FACTORY
CHENNAI-38

ICF/J&T/MISC-2627

	ASSEMBLY DRAWINGS	
04-03-22		
DATE	SME/D	AME/J&T

FORM IR A2a 810 x 420

ICF/J&T/SK-1867

▽ ROUGH MACHINED	
▽▽ FINISH MACHINED	
▽▽▽ FINE FINISH MACHINED	

ALTERATIONS

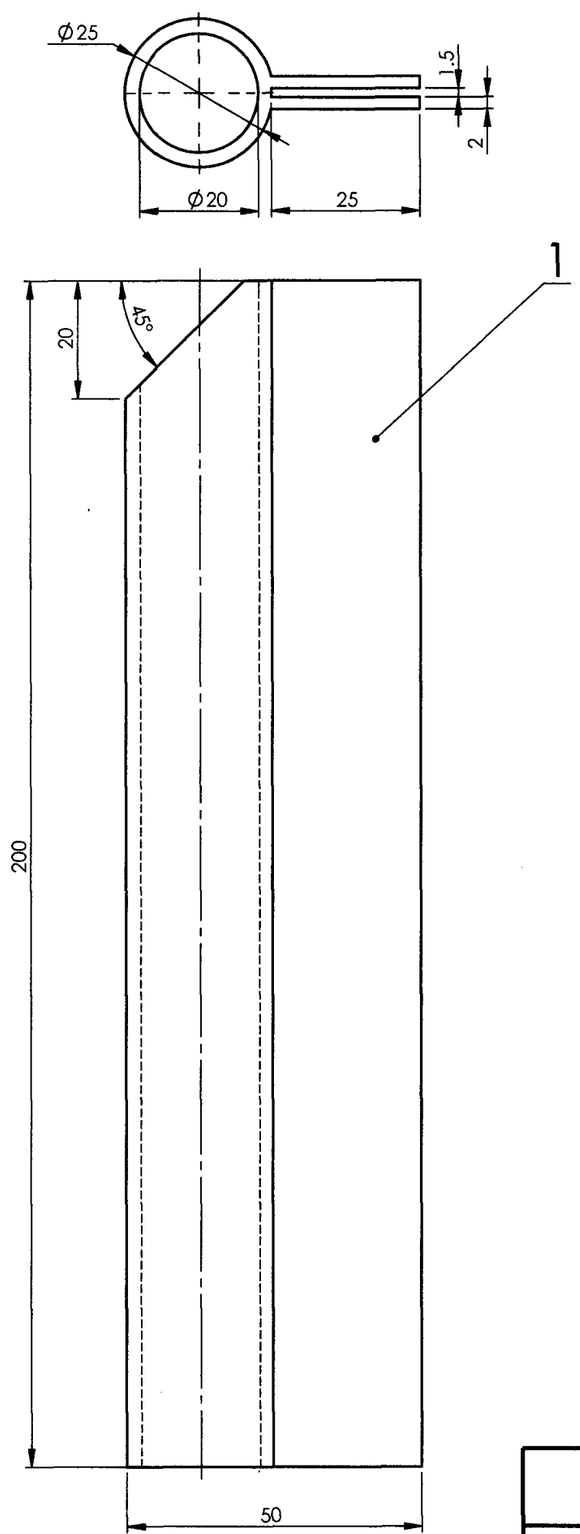

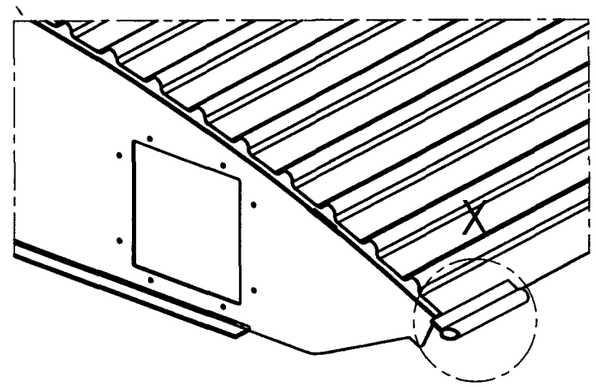

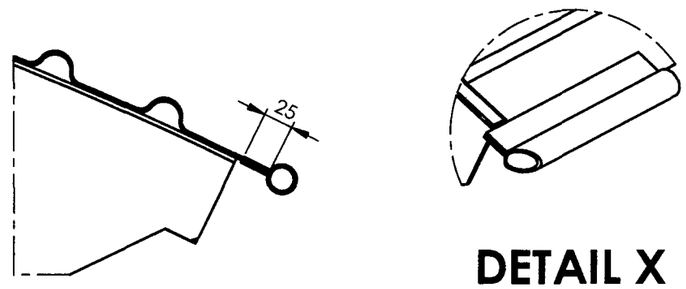

DETAIL X

SCALE 1 : 5

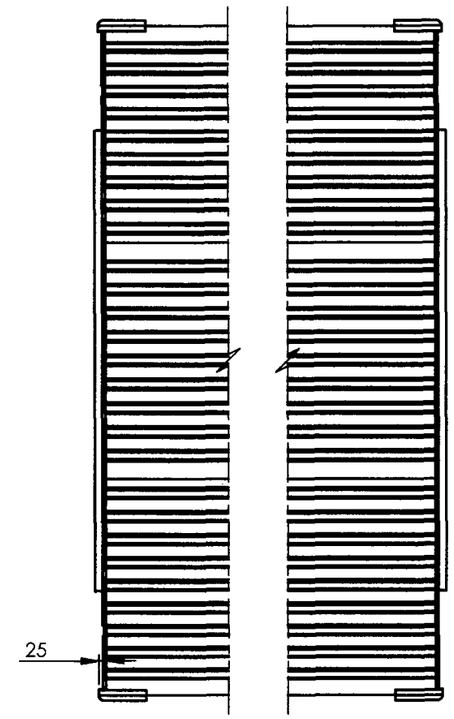

ROOF ASSY WITH PROTECTIVE RUBBER BEADING

NOTE:-

RUBBER BEADING TO BE PASTED ON ALL FOUR ROOF SHEET EDGES AS SHOWN WITH NON FLAMMABLE RUBBER ADHESIVE AS PER ICF/MD/SPEC-093

QTY.	DESCRIPTION	DIMENSIONS	ITEM NO.	REF.DRG.NO	MATL. & SPEC.	REMARKS
1	PROTECTIVE RUBBER BEADING	25x50x200	1		RUBBER	

PROTECTIVE RUBBER BEADING
TO PREVENT EYE INJURY

DURING STORAGE OF LHB ROOF ASSY.

Weight (kg)	0.05
SCALE 1:1	SSE/D
	CHD S.L.NARAYANAN
ALT -	ALTD
	DRN K.MURUGESAN

INTEGRAL COACH FACTORY, CHENNAI - 600038

ICF/J&T/SK-1867

DATE OF LATEST ALT.	DATE OF FIRST ISSUE	AME/SME
	ASSEMBLY DRAWINGS	
	10-07-21	10/7/21

JOB NO: 036/21-22

FORM IR A3 420x300