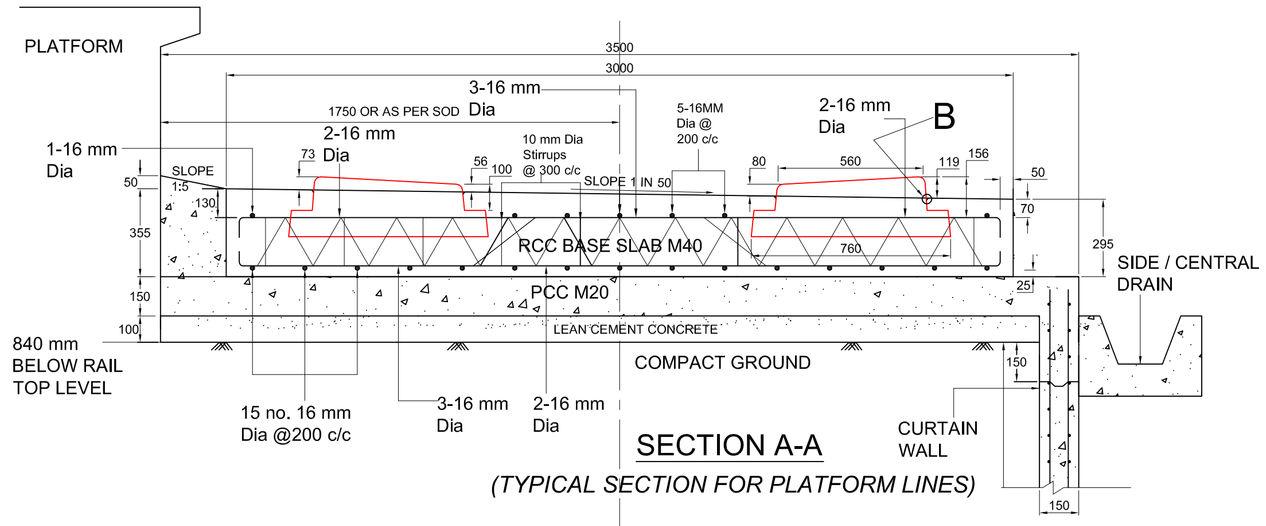

SECTION A-A

(TYPICAL SECTION FOR PLATFORM LINES)

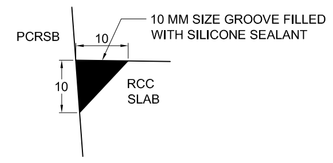

DETAIL OF B

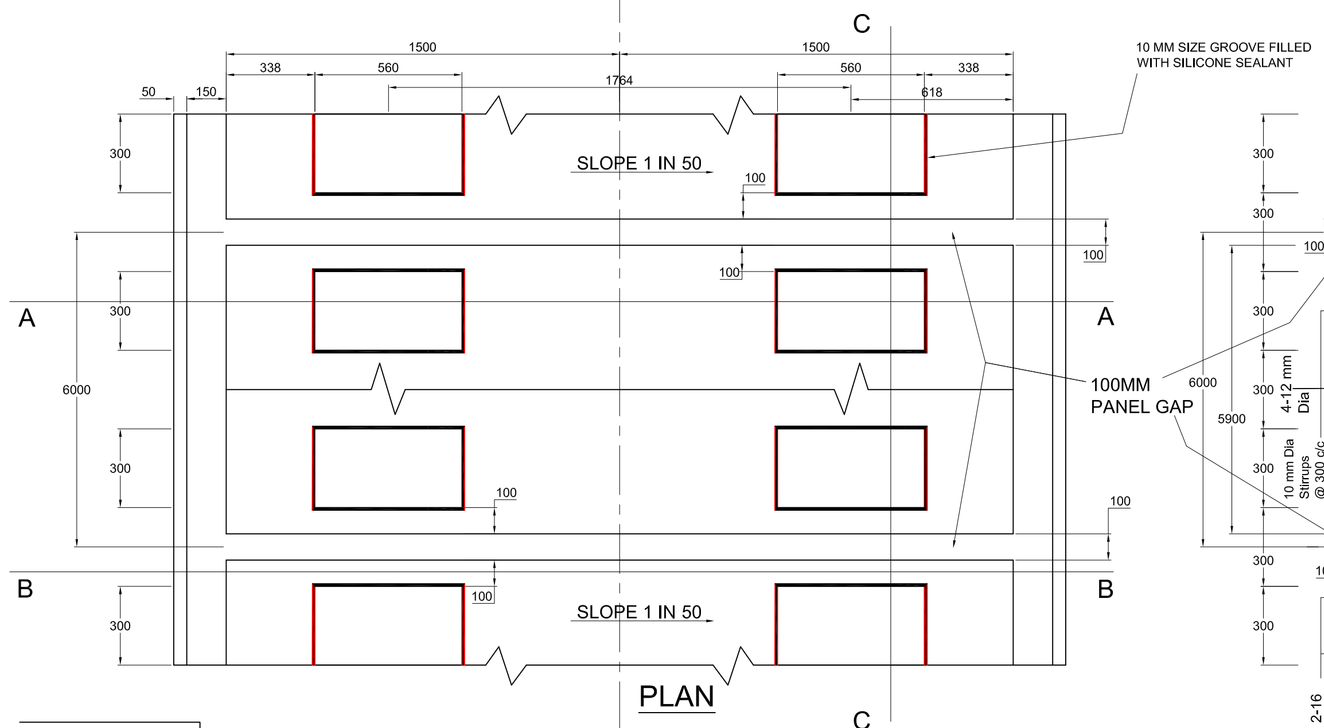

PLAN

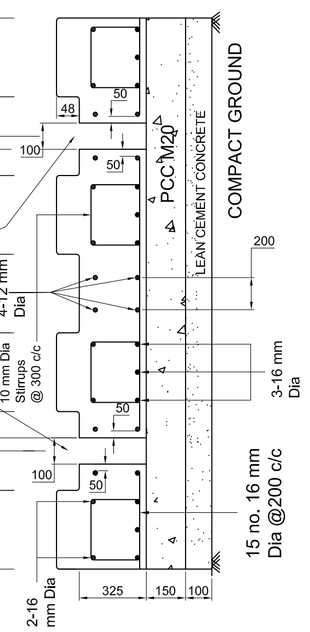

SECTION C-C

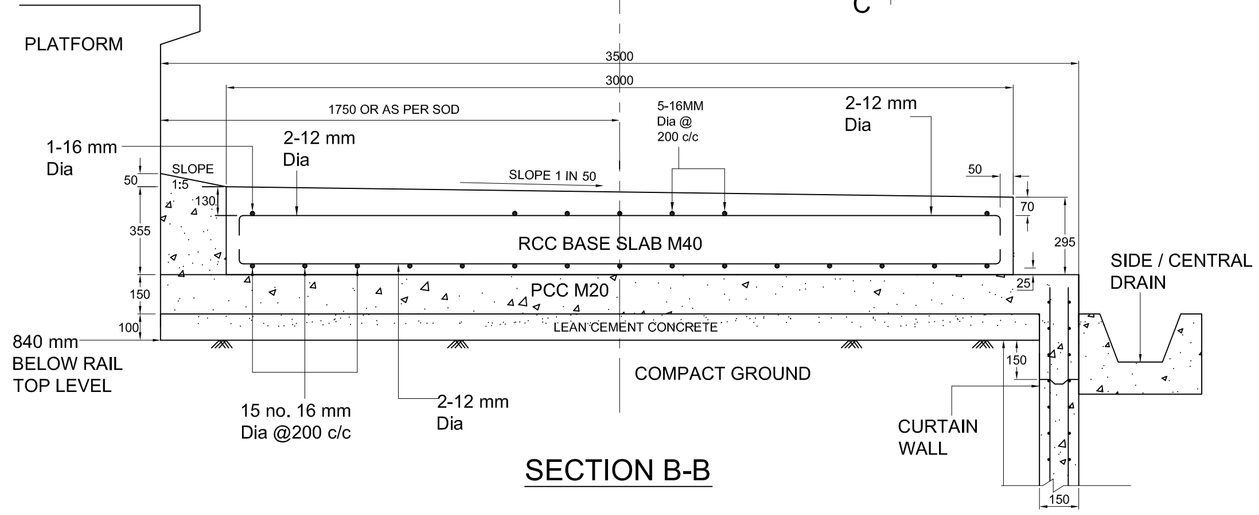

SECTION B-B

(TYPICAL SECTION FOR PLATFORM LINES)

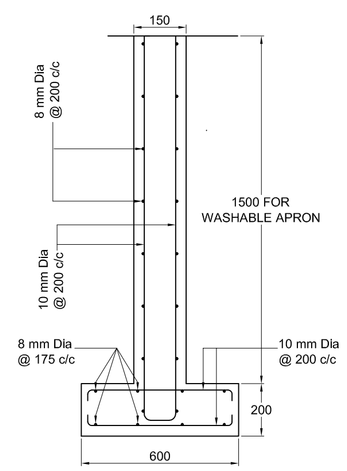

DETAIL OF CURTAIN WALL

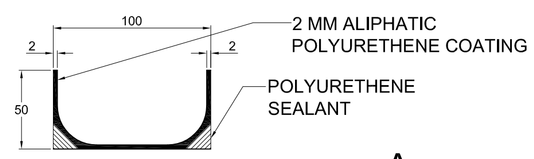

DETAIL OF A

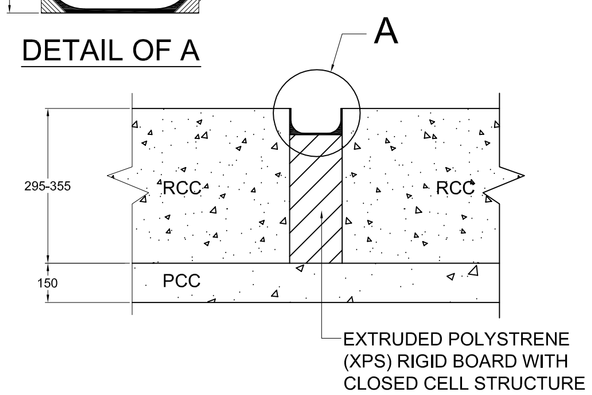

DETAIL OF PANEL GAP

SEQUENCE OF CONSTRUCTION WORK

1. PROCURE REQUIRED NUMBER OF 'CANTED PARTLY CASTED RAIL SEAT BEAM' MANUFACTURED AS PER DRAWING NO. RT-8777, 10MM COMPOSITE GRSPs,; ERCs AND LINERS AND KEEP THESE READY AT SITE.
2. KEEP ALL THE FITTINGS, JIGS (TRACK SUPPORT FRAME) TO HOLD THE RAIL/TRACK, REINFORCEMENT STEEL READY BEFORE UNDERTAKING THE WORK.
3. ENSURE WELL COMPACTED SUBGRADE WITH BEARING CAPACITY OF 10 T/SQM AT SUBGRADE TOP OR CARRY OUT GROUND IMPROVEMENT AND USE OF GEOTEXTILE TO ACHIEVE THE SAME, IF REQUIRED.
4. CONSTRUCT, CURTAIN WALL AS PER DRAWING.
5. CONSTRUCT 100 MM THICK LEAN CONCRETE BASE IN WIDTH OF 3.5M OVER WELL- COMPACTED AND LEVELLED SUBGRADE & 300MM COARSE SAND LAYER AND CURE IT FOR 3 DAYS. USE OF GEOTEXTILE IF REQUIRED.
6. DO 150 MM THICK M 20 CONCRETE BASE OF WIDTH 3.5 M AND CURE IT FOR 7 DAYS. HOWEVER REINFORCEMENT PLACEMENT FOR RCC BASE SLAB AND BINDING WORK CAN BE STARTED AFTER 3 DAYS OF CURING. PLACE BOTTOM LAYER OF SLAB REINFORCEMENT.
7. PLACE THE CANTED PARTLY CASTED RAIL SEAT BEAMS AT EVERY 60 CM SPACING AND CENTRALLY ON PCC BASE ACCURATELY.
8. PROVIDE THE TOP LAYER OF REINFORCEMENT BARS OF SLAB AND TIE THESE WITH BEAM REINFORCEMENT.
9. AFTER COMPLETING THE REINFORCEMENT PLACEMENT, ASSEMBLE TRACK OVER CANTED PCRSBs USING 10MM RUBBER PADS, ERCs, LINERS & 60kg UIC RAILS. HOLD BOTH RAIL WITH SPECIALLY DESIGNED JIGS/COMMERCIALY AVAILABLE TRACK SUPPORTING FRAME IN BETWEEN EVERY THIRD PARTLY CASTED RAIL SEAT BEAM (1.8 M).
10. CHECK THE TRACK PARAMETERS VIZ. GAUGE, CROSS LEVEL & ALIGNMENTS. ADJUST THE JIG'S VERTICAL & HORIZONTAL SCREW TO GET THE REQUIRED TRACK PARAMETERS ACCURATELY SECURING TRACK IN THIS POSITION.
11. FIX SHUTTERING FOR GETTING REQUIRED DIMENSION AS PER DRAWING.
12. CHECK TRACK GAUGE, LEVEL AND ALIGNMENT ONCE AGAIN, CORRECT IT WHEREVER NEEDED.
13. APPLY SUITABLE CONCRETE BONDING AGENT AT PERIPHERY OF PCRSB BELOW RCC SLAB LEVEL AND START CONCRETING OF SLAB AND BEAMS WITH M40 GRADE CONCRETE (PREFERABLY RMC). ENSURE PROPER COMPACTION OF CONCRETE BY NEEDLE VIBRATORS, ALL THROUGH THE RCC MASS. SPECIALLY IN SPACE BETWEEN PCRSB BLOCKS AND PCC SLAB.
14. PROVIDE 100MM PANEL GAP IN BETWEEN PANELS SIZE OF 5900MM IN RCC SLAB WITHOUT CONTINUATION OF REINFORCEMENT & WITH CLEAR COVER OF 50MM TO THE RENFORCEMENT.
15. PROVIDE SLOPE IN SLAB AREA AS PER DRAWING. MAIN BEAM CORNERS AND EDGES SHOULD BE MANUALY ROUNDED OFF BY TROWEL FOR PROPER DRAINAGE. SUITABLE SLOPE (SAY 1 IN 50) TO BE PROVIDED AT TOP OF FILLING OF PANEL GAP TOWARDS DRAIN IN PCC TOP SURFACE.
16. REMOVE THE JIGS FRAME FROM TRACK AFTER 8 - 12 HOURS AFTER CONCRETING. FILL THE CAVITIES USING MORTAR MADE FROM NON-SHRIKABLE CEMENT.
17. REMOVE THE SHUTTERING AFTER 8-12 HOURS AND CURE THE CONCRETE FOR 21 DAYS.
18. CONSTRUCT SIDE DRAINS AND CROSS DRAINS AS PER SITE REQUIREMENT.
19. TEMPORARY CONSTRUCTION OF CONCRETE PEDESTAL MAY BE PROVIDED IF REQUIRED TO SUPPORT/FIX LATERAL BRACINGS FOR PROVIDING LATERAL SUPPORT TO TRACK FRAMES FOR HOLDING THE TRACK IN EXACT POSITION LATERALLY DURING CONSTRUCTION OF BLT-IFS WASHABLE APRON.
20. FILL THE PANEL GAP WITH EXTRUDED POLYSTRENE RIGID BOARD & SUITABLE SEALANT.
21. PROVIDE SEALANT ALL AROUND AT CORNER/JUNCTION OF PCRSB AND RCC SLAB OVER THE 10MM GROOVE.

FOR DETAIL INSTRUCTIONS , FOLLOW THE 'CONSTRUCTION GUIDELINES' (CT-31 B) JULY, 2019 FOR BLT-IFS ISSUED BY RDSO.

SCHEDULE OF MATERIAL FOR ONE CANTED PARTLY CASTED RAIL SEAT BEAM

S.NO.	PART NAME		DRG. NO.	SPECN.	NOS.
1.	CANTED PARTLY CASTED RAIL SEAT BEAM.		RT- 8777	IS-456-2000	1
6.	ERC MK-V		RT-5919	T-31	4
7	GFN LINER	GS	RT- 6938	IRS/T-44	2
		NGS	RT- 6939	IRS/T-44	2
8.	10MM CGRSP		RT- 8528	RDSO/M&C/RP-200/2007	2

THIS DRAWING IS THE PROPERTY OF
RESEARCH DESIGNS AND STANDARDS ORGANISATION
(MINISTRY OF RAILWAYS)
LUCKNOW-226011-INDIA
AND SHALL NOT BE USED, COPIED, REPRODUCED IN PART OR WHOLE, WITHOUT PRIOR CONSENT IN WRITING.

R. D. S. O.

BALLASTLESS TRACK WITH INDIGENOUS FASTENING SYSTEM (BLT-IFS) FOR LOOPLINE WASHABLE APRON FOR SPEED UPTO 50KMPH

STAN: ADVANCE
CANCLD: 12-07-2019
REV: (T)

RDSO/T-8778

12. SUITABLE SLOPE (SAY 1 IN 50) TO BE PROVIDED AT TOP OF FILLING OF PANEL GAP TOWARDS DRAIN IN PCC TOP SURFACE.
11. LONGITUDINAL REINFORCEMENT OF SLAB SHALL BE CUT BEFORE THE 100MM PANEL GAP SO THAT A CLEAR CONCRETE COVER OF 50MM IS AVAILABLE. AT THE EACH PANEL JOINTS, ANCHOR BARS IN PCRSB SHALL BE CUT/ BENT AND TRANSVERSE REINFORCEMENT OF RCC SLAB AT TOP & BOTTOM SHALL BE SHIFTED SUITABLY TO HAVE CLEAR COVER OF 50MM AT THIS PANEL GAP.
10. TEMPORARY CONSTRUCTION OF CONCRETE PEDESTAL MAY BE PROVIDED IF REQUIRED TO SUPPORT/FIX LATERAL BRACINGS FOR PROVIDING LATERAL SUPPORT TO TRACK FRAMES FOR HOLDING THE TRACK IN EXACT POSITION LATERALLY DURING CONSRRUCTION OF BLT-IFS WASHABLE APRON.
9. FOR PLATFORM LINES WASHABLE APRON, 300mm THICK COARSE SAND LAYER IS TO BE PROVIDED BELOW LEAN CONCRETE.
8. THE BLT-IFS DRAWING IS MEANT FOR LOOP LINE WASHABLE APRON FOR SPEED UPTO 50KMPH.
7. ALL CORNERS BETWEEN CANTED PCRSB & BASE SLAB SHALL BE ROUNDED TO FACILITATE CLEANING.
6. BEARING CAPACITY OF SUBGRADE SOIL OF MINIMUM 10T/SQM SHALL BE ENSURED.
5. LEAN CONCRETE MIX OF CEMENT AND AGGREGATES SHALL BE PROVIDED OVER TOP OF FORMATION.
4. FOR RAIL SEAT ASSEMBLY, DRAWING NO. RDSO/T-8529 IS TO BE USED.
3. REINFORCEMEMT STEEL OF FE 500 GRADE CONFORMING TO IS:1786-2008 SHALL BE USED. FE 550 GRADE STEEL MAY ALSO BE USED, IF FE 500 GRADE IS NOT AVAILABLE.
2. FOR RCC, CONCRETE GRADE OF M40 CONFORMING TO IS: 456-2000 SHALL BE USED.
1. ALL DIMENSIONS ARE IN MILLIMETRES.

NOTE	SPECIFICATION	SCALE	ALT:	DESCRIPTION	DATE
	AS PER PART LIST	NOT TO SCALE			

DST/IV	PRANAV KUMAR		
EDST-II	SANDEEP SHARMA		
APPD.			
DRG:	MUKESH VERMA		
CH:	S.K.AWASTHI		
CAL:	M.SHIVANNA		
CH:	S.K.AWASTHI		
S.NO. ...			
CR.NO.			
PAGES			
CT/EF/BLT-IFS			
FILE			
PAGE			

Signature Not Verified
Digitally signed by SHIVAM SAINI
Date: 2026.05.06 13:00:54 IST
Reason: SelfDocumented
Location: IN-DL-New Delhi
Powered by NIC-PS-CRIS