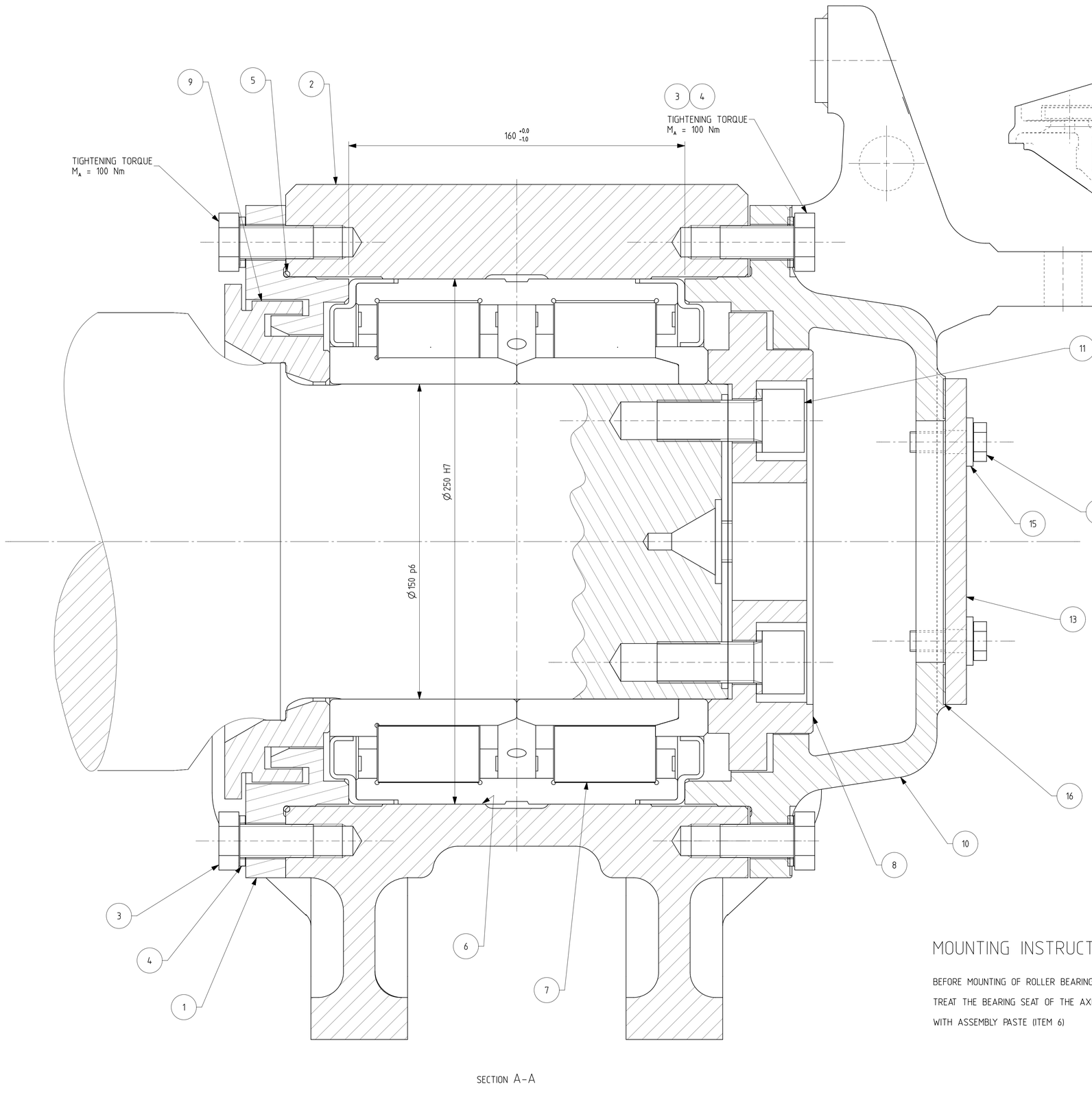

SECTION A-A

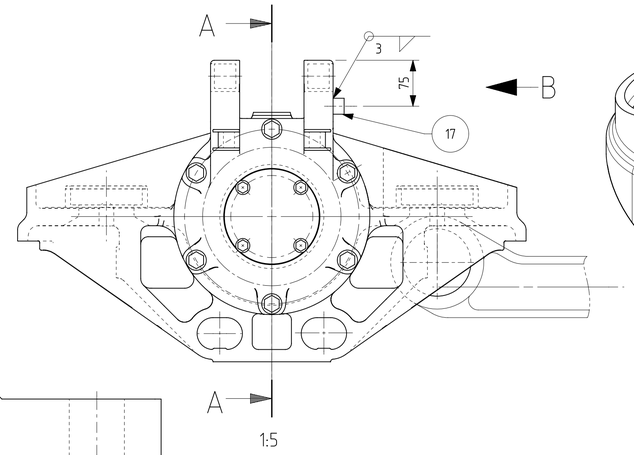

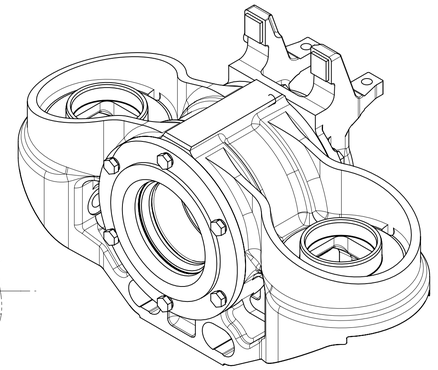

SHOWN WITHOUT ITEM 13,14,15 &16 FOR CLARITY.

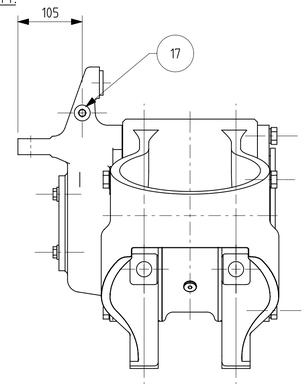

VIEW THROUGH ARROW 'B'
(SCALE 1:5)

MOUNTING INSTRUCTION

BEFORE MOUNTING OF ROLLER BEARINGS (ITEM 7)

TREAT THE BEARING SEAT OF THE AXLE-BOX CASE (ITEM 2)

WITH ASSEMBLY PASTE (ITEM 6)

REF. NO.	C&D NO.	PART DRG. NO.	DESCRIPTION	QTY.	MATL	SPECN	WT. EACH IN K.G.
17	/	1209-01.411-051	EARTHING CONNECTION	1	STEEL	IS:8500 Fe 540'B'	0.04
16	/	1209-01.411-049	GASKET KLINGER SIL-C4400	1	KLINGER SIL	SIL-C 4400	0.08
15	/	1209-18.406-396-010	WASHER CONICAL SPRING 10.5 HARDENED ZN PL. (PASS.)	4	SPRING STEEL	IS:3063,DIN:6796	
14	/	1209-18.406-452-003	SCREW HEX HD M10 x 1.5 - 30 LG. ZN PL.	4	ALOY STEEL,GR.12.9	IS:1364,PT-2	
13	/	1209-01.411-025	COVER	1			0.80
12	T201/043	1209-01.411-046-006	SAFETY WASHER	4	SPRING STEEL		
11	/	1209-18.406-370-005	SCREW CAP HD SOCKET M20X2.5 - 50 LG. ZN PL.	4	STEEL, CLASS-12.9	IS:2269	0.25
10	T201/070	1209-01.011-011	COVER ASSEMBLY	1			21.64
9	/	1209-01.311-013	ABUTMENT RING	1	STEEL	IS:2062 Gr.-C	3.20
8	/	1209-01.311-014	END CAP	1	STEEL	IS 2062 GR.C	6.50
7	T201/090	1209-01.311-061	CYLINDRICAL ROLLER UNIT CRU 150 OF SKF OR SIMILAR	1			31.00
6	/	1209-18.406-463-001	LUBRICATING AND ASSEMBLY PASTE ALLTEMP Q-NB 50	1			
5	/	1209-01.406-455	O RING ID 250 x 3	1	NBR-1872	ISO:3601,DIN:3771	
4	T201/046	1209-01.411-046-009	SAFETY WASHER VS 16	12	SPRING STEEL		0.02
3	/	1209-18.406-356-001	HEX HD.BOLT M16X2P,45 LONGX-38 THD-8.8(ZINC PLATED)	12	STEEL,CLASS-8.8	IS:1364	0.10
2	T201/072	1209-01.011-008	AXLE BOX HOUSING ASSEMBLY	1			100.01
1	T201/071	1209-01.111-012	REAR COVER	1	SGCI	IS:1865 SG/500/7	9.50

निर्देश संख्या REF. NO.	लागत एवं विवरण संख्या C&D NO.	अंग आरेखण संख्या PART DRG. NO.	वर्णन DESCRIPTION	मात्रा QTY.	पदार्थ MATL	विशिष्टि SPECN	प्रति भार कि. ग्रा. WT. EACH IN K.G.

3			REDRAWN IN NX WITH 3RD ANGLE PROJECTION.
2	DY.CEE/CON II-II		PART ORIGN/DUP REFNO.7 WAS 1209-01.311-052,USED FOR LOCOS-WAP-7 ADDED,REF.RDSO'S LETTER NO.EL/3.2-10B(3)Pn) 01-02-07
1	DY.CME/D&D		HEX.HEAD WAS SOCKET HEAD CAP SCREW(REF.NO.14)

अधिकचित्रण DGN	
जाँचा CHD	
अधीक्षक SUPDT.	
समीक्षित स.अ REVIEWED SE	
अनुमोदित उ.मु.वि.अ APPROVED DYEE	
दिनांक DATE	17-10-1993
पैमाना अनुपात SCALE	1:1
संदर्भ / REF. 8001-0076 8001-0180 8001-0207	ALT- 9

चितरंजन रेलइंजन कारखाना
CHITTARANJAN LOCOMOTIVE WORKS, INDIA

पदार्थ MATL	प्रति भार कि. ग्रा. WT. EACH IN KG 175.3
विशिष्टि SPECN	
वर्णन DESCRIPTION	AXLE BOX COMPLETE WITH BLANK COVER
आरेखण संख्या DRAWING NO.	1209-01.111-007
परिवर्तन संख्या ALTERATION NO.	3
पृष्ठ SHEET	1 OF 1
	A1

धातु–वेल्डन चिन्ह
भा. मा. : 813 / अ. मा. सं. :2553
WELDING SYMBOLS TO IS:813 / ISO:2553

सतह — खराश का मान
भा. मा. 3073 / अ. मा. सं. 1302
SURFACE ROUGHNESS VALUE TO IS:3073 / ISO:1302

अनिर्दिष्ट सहा — सीमा भा. मा. : 2102 / अ. मा. सं. : 2768
UNSPECIFIED TOLERANCE TO IS : 2102 / ISO : 2768

परांक GRADE NO.	सं1 N1	सं2 N2	सं3 N3	सं4 N4	सं5 N5	सं6 N6	सं7 N7	सं8 N8	सं9 N9	सं10 N10	सं11 N11	सं12 N12
Rz	0.16-0.3	0.3-0.7	0.5-1.1	1.5-2.8	2.5-3.8	3.8-6.3	9.0-12	14-25	30-40	50-63	75-100	140-254
Ra µm	0.025	0.05	0.1	0.2	0.4	0.8	1.6	3.2	6.3	12.5	25	50
चिन्ह SYMBOL												

TOL. CLS.

परिवर्तन संख्या ALT. NO.	प्राधिकार AUTHY	वर्णन DESCRIPTION	दिनांकित वाक्षर DATED INITIAL

Signature Not Verified
Digitally signed by SANTOSH MUTTAPATIL SANKAR
Date: 2026.01.30 12:39:35 IST
Reason: Integrity Location: NIC-CRIS

This document/drawing was prepared by or on behalf of CLW and the copyright belongs to CLW. Reproduction in whole or in part requires prior written consent of CLW. In the drawing inappropriate certificate dimension of CLW to disclosure to third parties also reports CLW's prior written consent.