T-0-2-602

SURFACE ROUGHNESS VALUE TO IS:3073	GRADE NUMBER	N1	N2	N3	N4	N5	N6	N7	N8	N9	N10	N11	N12
	Ra µm	0.025	0.05	0.1	0.2	0.4	0.8	1.6	3.2	6.3	12.5	25	50
	SYMBOL	▽▽▽▽			▽▽▽			▽▽			▽	~	

▽ ROUGH MACHINED
▽▽ FINISH MACHINED
▽▽▽ FINE FINISH MACHINED
(18) CHAMFERED
(19) BURRS REMOVED
(08) ROUGH GROUND

AXLE BOX – FINISH MACHINED

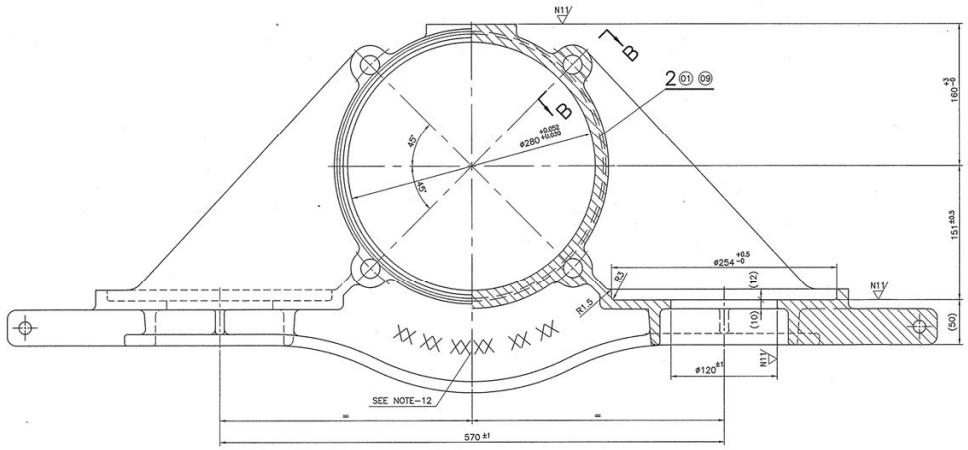

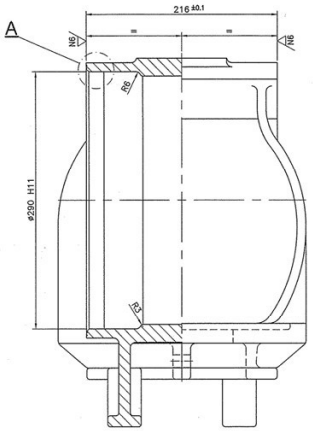

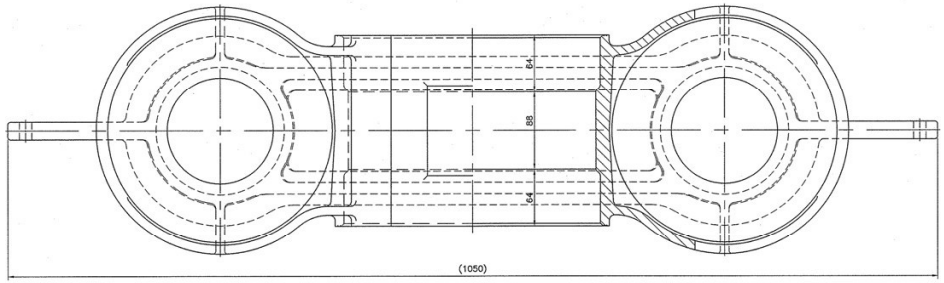

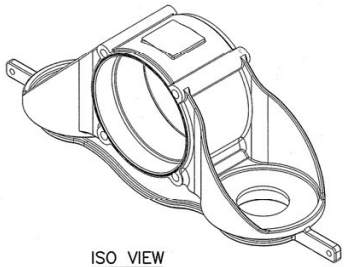

ISO VIEW

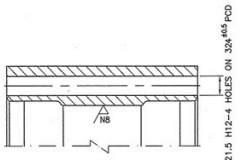

SECTION – BB

SCALE– 1:2.5

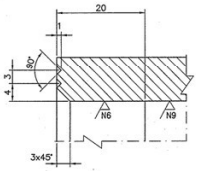

DETAIL AT – A

SCALE – 2:1

QTY	DESCRIPTION & DIMENSION	ITEM	REF.DRGS	MAT.SPEC	WEIGHT/UNIT	REMARKS
	GROUP: 0–2				SUPERSEDED BY:	
	AXLE BOX HOUSING				SUPERSEDES: T–0–2–602 ALT.J/14	

SCALE 1:2.5 | 2:1 — SSE/D, CHD, ALTD M.Chandrasekaran, DRN M.Chandrasekaran

Alpha Alt:–Y

INTEGRAL COACH FACTORY CHENNAI–38

Num. Alt.	DATE OF LATEST ALT	DATE OF FIRST ISSUE	AME/SME	DATA CODE NO.	INDIAN RAILWAY STANDARDS	SHEET
14	10–11–2017	12–02–1997	ASSEMBLY DRAWINGS	000		1 OF 2

T–0–2–602

FORM:–IR.A1–840X600

a.00

DATE: 2026/0/0 DY.CME(W)/HQ/DYRDSO/RQ
REF: 06.01
REPORT

T-0-2-602

(14) 2/97 DRAWING REDRAWN. SSE/D -Sd- 12-02-97 SME/BD	(13) 10/95 QTY. FOR DC/CMIS ADDED IN COL-6. SD: Sd...10/95	▽ ROUGH MACHINED ▽▽ FINISH MACHINED ▽▽▽ FINE FINISH MACHINED	(18) CHAMFERED (19) BURRS REMOVED (20) ROUGH GROUND

ALTERATIONS

(C) 07/2005
FOR ITEM-3, ▽ FINISH DELETED IN SPRING SEAT AREA.
SSE/D -Sd. 5.7.2005 AME/D

(a) 03/2006
IN PLAN VIEW OF AXLE BOX. FINISH MACHINED DIMENSIONS 62,92&62 ALTD. TO 64,88&64 RESPLY. & RADIUS 38 ADDED. MACHINING SYMBOLS REPLACED BY Ra GRADE NUMBERS. STAMPING PARTICULARS REVISED.
-sd- 15-3-2006
SSE/D AME/D

(b) 10/2007
ITEM-1 & COL-1 DELETED. DESIGN OF WING BASE SUPPORT, STIFFENER AT BOTTOM & SAFETY LUG MODIFIED.
-sd- 17-10-2007
SSE/D AME/D

(c) 05/2008
FOR ITEMS-2 & 3, REF. SPECIFICATION ALTD. FROM ST/N/D-SPEC. 059 REV.3 TO RDSO/2007/02-08. NOTE-10 DELETED.
-sd- 26-05-2008
SSE/D AME/D

(d) 11/2017
IDENTIFICATION DETAILS CORRECTED AS PER SPECIFICATION & NOTE-12 ADDED.
SSE/D SME/BD

AXLE BOX- CAST & ROUGH MACHINED

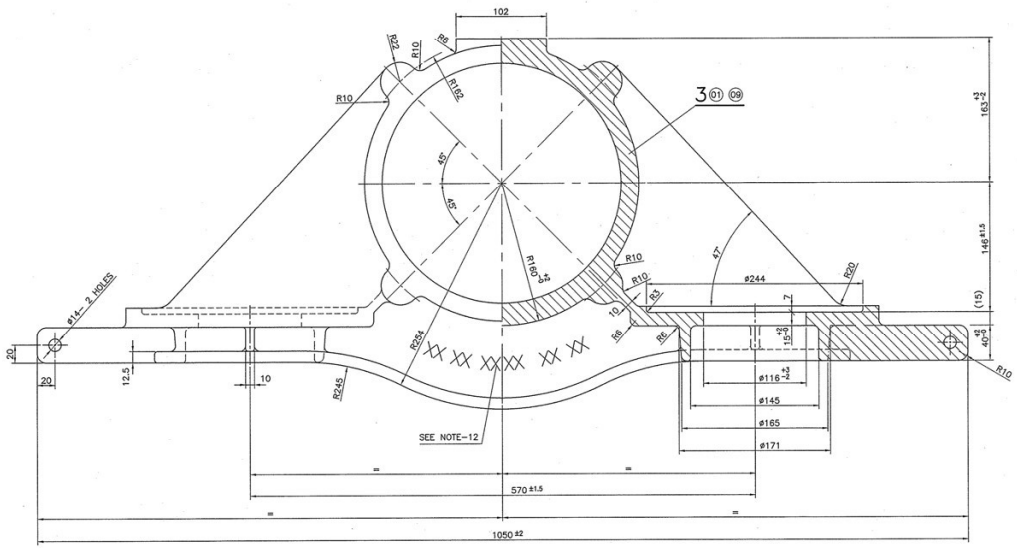

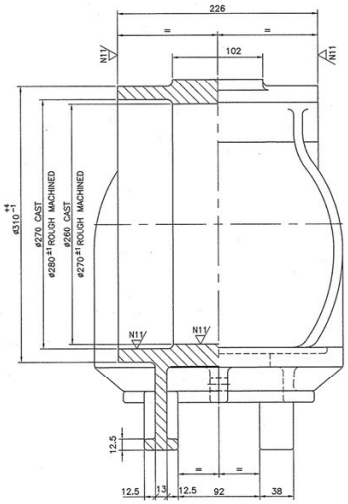

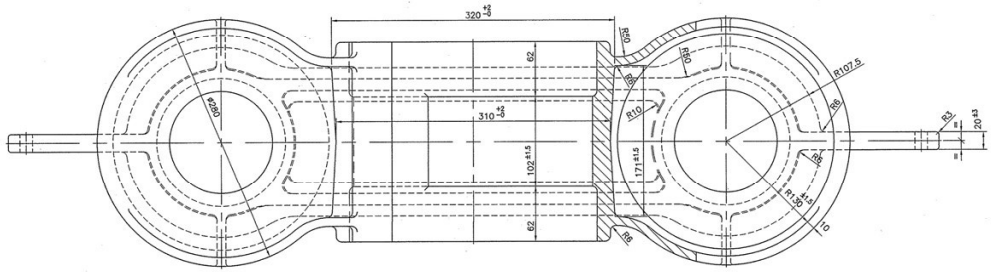

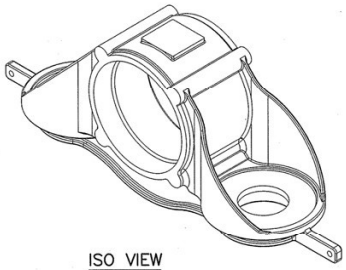

ISO VIEW

NOTE:

~~10.~~

11. DEVIATIONS ON UNTOLERANCED MACHINED DIMENSIONS SHALL BE TO IS:2102(PART-1) MEDIUM CLASS.

12. FOR IDENTIFICATION DETAILS, REFER DRG NO. ICF/SK-0-2-191.

ALL AC & NON AC MAIN LINE BOGIES

QTY			DESCRIPTION & DIMENSION	ITEM	REF.DRGS	MAT.SPEC	WEIGHT/UNIT	REMARKS
8	-		AXLE BOX HOUSING ROUGH MACHINED	3	RDSO/2007/02 08 (LATEST)		83kg (APPROX)	
-	8		AXLE BOX HOUSING FINISH MACHINED	2	RDSO/2007/02 08 (LATEST)		70kg (APPROX)	
=	=			1				
3	2	1	GROUP: 0-2					

AXLE BOX HOUSING

PER COACH / PER COACH / PER SQMCH

SUPERSEDED BY:
SUPERSEDES: T-0-2-602 ALT u/14
SCALE 1:2.5
SSE/D
CHD
ALTD M.Chandrasekaran
DRN M. Chandrasekaran
Alpha Alt:- V

INTEGRAL COACH FACTORY CHENNAI-38

WTAC-0-2-304 ASSEMBLY DRAWINGS					
14 Num. Alt.	10-11-2017 DATE OF LATEST ALT	12-02-1997 DATE OF FIRST ISSUE	AME/SME	DATA CODE NO. 000	INDIAN RAILWAY STANDARDS

SHEET 2 OF 2

T-0-2-602

FORM:-IR.A1-840X600

c.02