Signature Not Verified
Digitally signed by PRASUN KUMAR GHOSH
Date: 2026.06.09 17:01:52 IST
Reason: IREPS
Document
Location: IREPS-CRIS

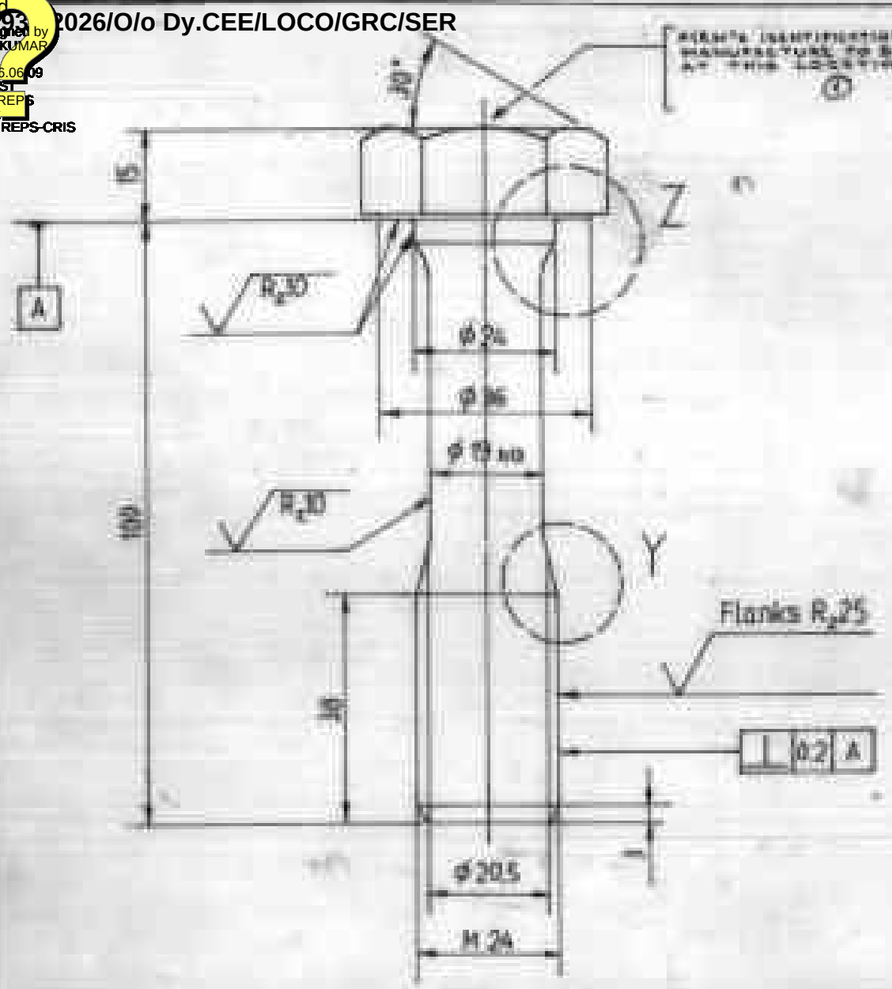

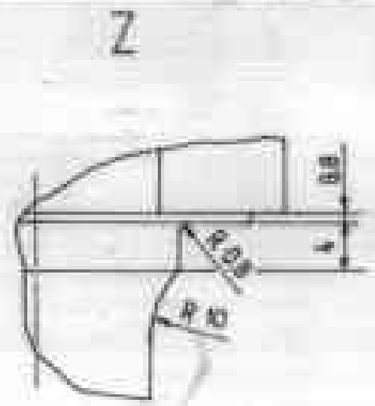

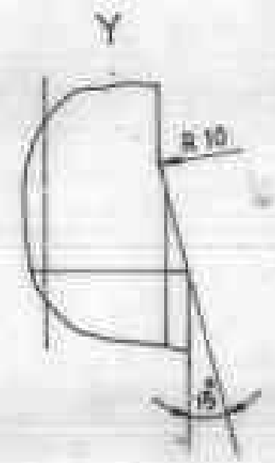

NOTES

1. CHECK ABSENCE OF CRACKS THROUGH ULTRASONIC TESTING & MAGNETIC PARTICLE INSPECTION TO AS 1191-78
2. PRIME & LACQUER ANTIFATIGUE SHAFT
3. QUENCHED & TEMPERED TO 800-950 MPa
4. MINIMUM YIELD POINT 600 MPa

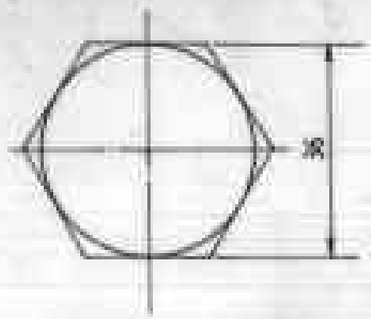

WELDING SYMBOLS TO IS:813

	—	—	NECKED-DOWN BOLT M24 X100	24	STEEL	IS:2062 GRADE A	0.42
DED NO.	REF. NO.	PART DRG. NO.	DESCRIPTION	NO/LOCO	MATL	SPECN	WT EACH IN KG

REF. ASSLY DRG. NO.
AAB DRG. NO. 18016-00459
1209-01-US-001, REF. NO. 2

DED CENTRE
CHITTRANJAN LOCOMOTIVE WORKS
CAD NO.
1ST ANGLE PROJECTION
USED FOR LOCOS WAG-9

NECKED-DOWN BOLT
M24 x 100

DRAWING NO.
1209-01-315-206

ALT.	Kumar	DESCRIPTION					

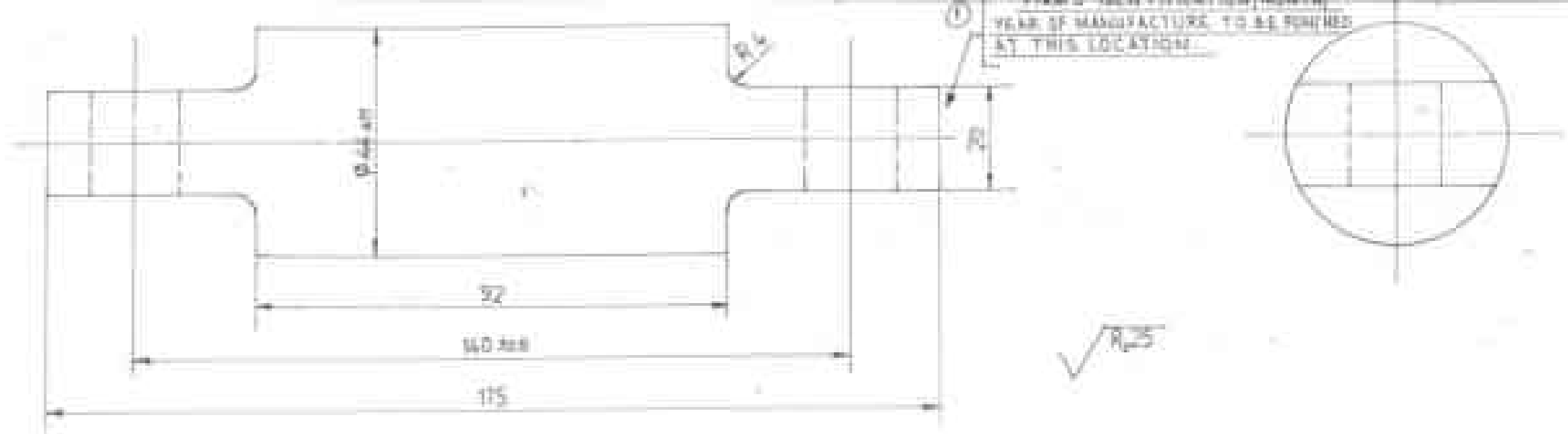

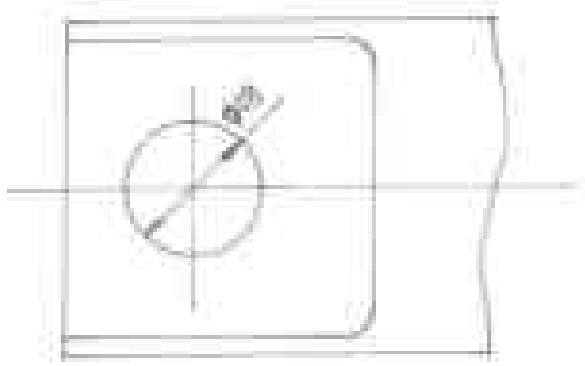

NOTE:-
QUENCHED & TEMPERED TO 900 - 1100 MPa

T222/018	—	—	BOLT	B	STEEL	IS:5517 [illegible]	1·66
C.E.D. NO.	REF. NO.	PART DRG. NO.	DESCRIPTION	NO./LOCO	MATL	SPECN	WT. IN KG.

DGN | CHD | SUPDT | SE(M/E) | DATE
SCALE 1:1
REF. ASSLY DRG. NO.
ABB DRG NO 18016-00457
1209-01-115-001, REF. NO. 17

BOLT

D & D CENTRE
CHITTARANJAN LOCOMOTIVE WORKS
CAD NO.
1ST ANGLE PROJECTION
USED FOR LOCOS - WAG-9
DRAWING NO.
1209-01-315-017

UNSPECIFIED TOLERANCE TO IS: 2102	SURFACE ROUGHNESS VALUE IN µm	GRADE NUMBER	N1	N2	N3	N4	N5	N6	N7	N8	N9	N10	N11
		Ra µm	[illegible]	[illegible]	0·1	0·2	0·4	0·8	1·6	[illegible]	[illegible]	12·5	25
		SYMBOL	VVVV			VVV			VV			V	~

①	BY CME/SRS	LOCATION FOR IDENTIFICATION ADDED		
ALTN.	AUTHY.	DESCRIPTION	DATED INITIAL	

T222/018

3047931/2026/O/o Dy.CEE/LOCO/GRC/SER

इंटरनेट मानक

Disclosure to Promote the Right To Information

Whereas the Parliament of India has set out to provide a practical regime of right to information for citizens to secure access to information under the control of public authorities, in order to promote transparency and accountability in the working of every public authority, and whereas the attached publication of the Bureau of Indian Standards is of particular interest to the public, particularly disadvantaged communities and those engaged in the pursuit of education and knowledge, the attached public safety standard is made available to promote the timely dissemination of this information in an accurate manner to the public.

"जानने का अधिकार, जीने का अधिकार"
Mazdoor Kisan Shakti Sangathan
"The Right to Information, The Right to Live"

"पुराने को छोड नये के तरफ"
Jawaharlal Nehru
"Step Out From the Old to the New"

IS 1364-1 (2002): Hexagon Head Bolts, Screws and Nuts of Product Grades A and B, Part 1: Hexagon Head Bolts (Size Range M 1.6 to M 64) [PGD 31: Bolts, Nuts and Fasteners Accessories]

"ज्ञान से एक नये भारत का निर्माण"
Satyanarayan Gangaram Pitroda
"Invent a New India Using Knowledge"

"ज्ञान एक ऐसा खजाना है जो कभी चुराया नहीं जा सकता है"
Bhartṛhari—Nītiśatakam
"Knowledge is such a treasure which cannot be stolen"

BLANK PAGE

BRUTUM FULMEN

PROTECTED BY COPYRIGHT

भारतीय मानक

उत्पाद ग्रेड ए और बी के लिए षटकोणीय शीर्ष वाले काबले, पेंच और ढिबरियाँ

भाग 1 षटकोणीय शीर्ष वाले काबले (साइज रेंज एम 1.6 से एम 64 तक)

(चौथा पुनरीक्षण)

Indian Standard

HEXAGON HEAD BOLTS, SCREWS AND NUTS OF PRODUCT GRADES A AND B

PART 1 HEXAGON HEAD BOLTS (SIZE RANGE M 1.6 TO M 64)

(Fourth Revision)

ICS 21.060.10

WDIS 2002

BUREAU OF INDIAN STANDARDS
MANAK BHAVAN, 9 BAHADUR SHAH ZAFAR MARG
NEW DELHI 110002

November 2002

Price Group 6

Basic Hardware: Fasteners Accessories Sectional Committee BP 62

NATIONAL FOREWORD

This Indian Standard (Part 7) (Fourth Revision) which is identical with ISO 4014:1999 'Hexagon head bolts—Product grades A and B' issued by the International Organization for Standardization (ISO) was accepted by the Bureau of Indian Standards on the recommendation of the Basic Hardware Accessories Sectional Committee and approved by the Design and Production Engineering Division Council.

IS 1364 was originally published in 1966 and first revised in 1967. Subsequent to the publication of 1967 edition many changes had been agreed upon at international level which have been reflected in IS 1367 series of standards covering 'Technical supply conditions for threaded steel fasteners'. Accordingly, second revision was published in 1992 splitting the standard into 5 parts covering hexagon head bolts, hexagon head screws, hexagon nuts, hexagon thin nuts (chamfered) and hexagon thin nuts (unchamfered).

The third revision of the standard was published in 1992 by adoption of ISO 4014:1988. This fourth revision has been prepared by adoption of latest version of ISO 4014 published in 1999. The remaining parts of the standard, namely, Part 2, Part 3, Part 4 and Part 5 have also been revised by accepting the corresponding latest editions of ISO Standards published in 1998.

The Committee has decided to publish Indian Standard on 'Hexagon nuts, style 2—Product grades A and B' as Part 8 of IS 1364. This Part 8 will supersede IS/ISO 4032:1979 on its publication.

In 1967 version of this standard, the width across flat dimensions for M10 and M12 size fasteners were specified as 17 mm and 19 mm respectively. However in the 1986 version, these widths across flat dimensions were brought in line with ISO 4014:1979 and specified as 16 mm and 18 mm respectively for M10 and M12 size fasteners. Recognizing the difficulty of immediate changeover to new width across flat dimensions, the Committee decided to permit width across flat dimensions as per 1967 version, namely, 17 mm and 19 mm for M10 and M12 size fasteners till 31 December 1994. Now it is expected that the entire fastener industry would have switched over to new width across flat dimensions and from 1 January 1995, no old width across flat dimensions shall be permitted.

The text of ISO Standard has been approved as suitable for publication as an Indian Standard without deviations. Certain terminology and conventions are, however, not identical to those used in Indian Standards. Attention is drawn especially to the following.

a) Wherever the words 'International Standard' appear referring to this standard, they should be read as 'Indian Standard'.

b) Comma (,) has been used as a decimal marker while in Indian Standards, the current practice is to use a point (.) as the decimal marker.

In this adopted standard, reference appears to certain International Standards for which Indian Standards also exist. The corresponding Indian Standards which are to be substituted in their place are listed below along with their degree of equivalence for the editions indicated.

International Standard	Corresponding Indian Standard	Degree of Equivalence
ISO 225 : 1983	IS 8336 : 1977 Fasteners—Bolts, screws, studs and nuts—Symbols and designation of dimensions (first revision)	Identical
ISO 724 : 1993	IS 4218 (Part 6) : 2000 ISO General purpose metric screw threads: Part 6 Basic dimensions (second revision)	do

International Standard	Corresponding Indian Standard	Degree of Equivalence
ISO 888 : 1975	IS 4828:1967 Dimensions for nominal lengths and thread lengths for bolts, screws and studs (first revision)	Identical
ISO 898-1 : 1999	IS 1367(Part 3):2002 Technical supply conditions for threaded steel fasteners: Part 3 Mechanical properties of fasteners: Sub-Part 1 Bolts, screws and studs made of carbon steel and alloy steel - Bolts, screws and studs (fourth revision)	do
ISO 965-1 : 1998	IS 14962(Part 1):2001 ISO General purpose metric screw threads—Tolerances: Part 1 Principles and basic data	do
ISO 1891	IS 1367 (Part 17):1999 Industrial fasteners — Threaded steel fasteners—Technical supply conditions : Part 17 Inspection, sampling and acceptance procedure (third revision)	do
ISO 3506-1 : 1997	IS 1367 (Part 14/Sec 1):2002 Technical supply conditions for threaded steel fasteners: Part 14 Mechanical properties of corrosion resistant stainless steel fasteners: Section 1 Bolts, screws and studs (third revision)	do
ISO 4017 : 1999	IS 1364(Part 2):2002 Hexagon head bolts, screws and nuts of product grades A & B: Part 2 Hexagon head screws (size range M 1.6 to M 64) (fourth revision)	do
ISO 4042 : 1999	IS 1367 (Part 11):2002 Technical supply conditions for threaded steel fasteners: Part 11 Electroplated coatings (third revision)	do
ISO 4759-1 : 2000	IS 1367 (Part 2):2002 Technical supply conditions for threaded steel fasteners: Part 2 Product grades and tolerances (third revision)	do
ISO 8676 : 1989	1367(Part 8/Sec 1):1988 Technical supply conditions for threaded steel fasteners : Part 8 Surface discontinuities, Section 1 Bolts, screws and studs for general applications (third revision)	do
ISO 3269:1988	IS 1367 (Part 1):2002 Technical supply conditions for threaded steel fasteners: Part 1 Introduction and general information (third revision)	do

---

* This part is being revised as ISO 3269:2000.
* Issued as a draft ISO 3269 (DIS) under publication.

This proposed Technical Committee has reviewed the provisions of the following ISO International Standards referred in this adopted standard and recommends that they be accepted for use in conjunction with this standard :

ISO Standard	Title
ISO 3506-1:1997	Mechanical properties of fasteners — Bolts, screws, studs and nuts made of corrosion resistant metals
ISO 10083:1991	Technical conditions for wrought stainless steel fasteners — Delivery condition, test methods and acceptance criteria

ADAPTATION

In clause 3 the designation of hexagon head bolt shall read as follows :

'Hexagon head bolt IS 1364(Part 1)/ISO 4014 – M12 x 80—8.8' in place of 'Hexagon head bolt ISO 4014–M12 x 80–8.8'

DEFINITION

(Page 4, Table 1, col 2, row 22)—Against dimensions d_w, for Product grade A, size M1.6 read '2.4' in place of '2.3'.

(Page 4, table 1, row 23 & 24) – Against dimensions e, for Product grade A, size M1.6 read '3.41' and '3.20' in place of '3.30' and '3.11' respectively.

(Page 4, Table 1, col 7, row 32) – Against dimensions k_w, for Product grade A, size M1.6 read '0.95' in place of '0.7'.

(Page 5, table 2, col 3) – Head k_{max} in place of k_w.

(Page 8, Table 5, col 5) – Head k_{max} as '51.5' in place of '50.5' for nominal length '260'.

PACKING

The packaging of hexagon head bolts shall be in accordance with IS 1367(Part 1)/ISO 1000 'Industrial fasteners — Threaded fasteners — Technical supply conditions (Part 1) Packaging (Wholesale)'.

DESCRIPTION MARKING

Details available with the Bureau of Indian Standards.

For the purpose of deciding whether a particular requirement of this standard is complied with, the final value, observed or calculated, expressing the result of a test or analysis, shall be rounded off in accordance with IS 2 : 2022 'Rules for rounding off numerical values (revised)'. The number of significant places retained in the rounded off value should be the same as that of the specified value in this standard.

3047931/2026/O/o Dy.CEE/LOCO/GRC/SER

IS 1364 (Part 1) : 2002
ISO 4014 : 1999

Indian Standard

HEXAGON HEAD BOLTS, SCREWS AND NUTS OF PRODUCT GRADES A AND B

PART 1 HEXAGON HEAD BOLTS (SIZE RANGE M 1.6 TO M 64)

(Fourth Revision)

1 Scope

This International Standard specifies the characteristics of hexagon head bolts with threads from M1.6 up to and including M64, of product grade A for threads M1.6 to M24 and nominal lengths up to and including 10 d or 150 mm, whichever is shorter, and product grade B for threads over M24 or nominal lengths over 10 d or 150 mm, whichever is shorter.

It is special cases, specifications other than those stated in this International Standard are required, they should be selected from existing International Standards, for example ISO 724, ISO 888, ISO 965-1, ISO 965-2, ISO 4759-1 and ISO 4759-1.

2 Normative references

The following normative documents contain provisions which, through reference in this text, constitute provisions of this International Standard. For dated references, subsequent amendments to, or revisions of, any of these publications do not apply. However, parties to agreements based on this International Standard are encouraged to investigate the possibility of applying the most recent editions of the normative documents indicated below. For undated references, the latest edition of the normative document referred to applies. Members of ISO and IEC maintain registers of currently valid International Standards.

ISO 225 : 1983, Fasteners — Bolts, screws, studs and nuts — Symbols and designation of dimensions.

ISO [illegible], ISO general purpose metric screw threads — Basic dimensions.

ISO 1891 : 1979, Bolts, screws and studs — Nominal lengths and thread lengths for general purpose bolts.

ISO 898-1 : 1999, Mechanical properties of fasteners made of carbon steel and alloy steel — Part 1: Bolts, screws and studs.

ISO 965-1 : 1998, ISO general purpose metric screw threads — Tolerances — Part 1: Principles and basic data.

ISO 3269 : [illegible], Fasteners — Acceptance inspection.

ISO 3506-1 : 1997, Mechanical properties of corrosion-resistant stainless steel fasteners — Part 1: Bolts, screws and studs.

ISO 4759-1 : 1978, Tolerances for fasteners — Part 1: Bolts, screws, nuts and washers — Product grades A, B and C.

ISO 4042 : 1999, Fasteners — Electrodeposited coatings.

ISO [illegible], Fasteners — Polishing and [illegible] of metallic and non-metallic coatings.

---

[1] To be published. (Revision of ISO 3269 : 1988)

[2] To be published. (Revision of ISO 4753 : 1983)

3047931/2026/O/o.Dy.CEE/LOCO/GRC/SER

ISO 4014 : 1999

ISO 4759-1 : 2000[1], Tolerances for fasteners — Part 1: Bolts, screws, studs and nuts — Product grades A, B and C

ISO 8167-1 : 1985, Fasteners — Surface discontinuities — Part 1: Bolts, screws and studs for general requirements

ISO 8839 : 1986 Mechanical properties of fasteners — Bolts, screws, studs and nuts made of non-ferrous metals

ISO 8992 : 1986 Fasteners — General requirements for bolts, screws, studs and nuts

ISO 10683 : 2000[1], Fasteners — Non-electrolytically applied zinc flake coatings

3 Dimensions

See Figure 1 and Tables 1 and 2

Symbols and calculation of dimensions are defined in ISO 225.

[1] Under consideration (Revision of ISO 4759-1 : 1978)

[1] Under consideration

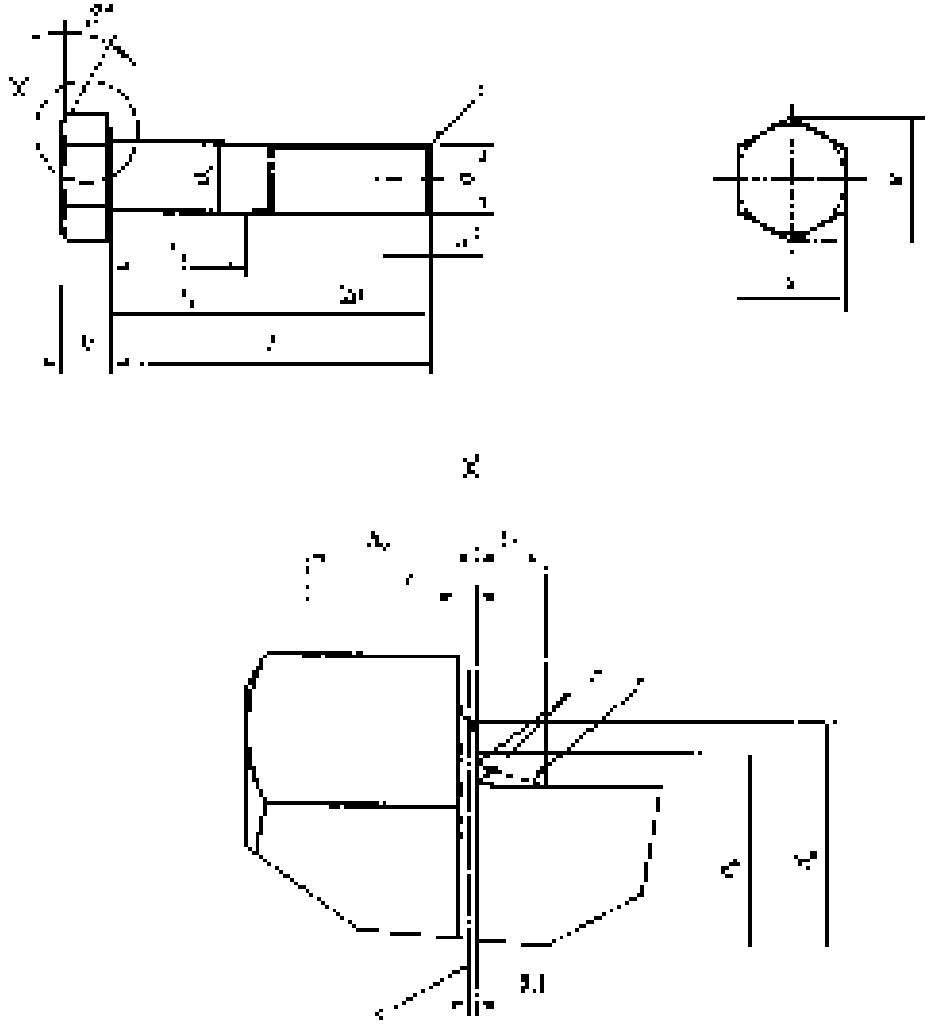

Figure 1

Table 1 — Preferred threads

Dimensions in millimetres

Thread size *d*				M1,6	M2	M2,5	M3	M4	M5	M6	M8	M10
P				0,35	0,4	0,45	0,5	0,7	0,8	1	1,25	1,5
b ref.			b	9	10	11	12	14	16	18	22	26
			c	15	16	17	18	20	22	24	28	32
			d	28	29	30	31	33	35	37	41	45
c			max.	0,25	0,25	0,25	0,40	0,40	0,50	0,50	0,60	0,60
			min.	0,10	0,10	0,10	0,15	0,15	0,15	0,15	0,15	0,15
*d*a			max.	2	2,6	3,1	3,6	4,7	5,7	6,8	9,2	11,2
*d*s	nom. = max.			1,60	2,00	2,50	3,00	4,00	5,00	6,00	8,00	10,00
	Product grade	A	min.	1,46	1,86	2,36	2,86	3,82	4,82	5,82	7,78	9,78
		B		1,35	1,75	2,25	2,75	3,70	4,70	5,70	7,64	9,64
*d*w	Product grade	A	min.	2,27	3,07	4,07	4,57	5,88	6,88	8,88	11,63	14,63
		B		2,3	2,95	3,95	4,45	5,74	6,74	8,74	11,47	14,47
e	Product grade	A	min.	3,41	4,32	5,45	6,01	7,66	8,79	11,05	14,38	17,77
		B		3,28	4,18	5,31	5,88	7,50	8,63	10,89	14,20	17,59
*l*f			max.	0,6	0,8	1	1	1,2	1,2	1,4	2	2
k			nom.	1,1	1,4	1,7	2	2,8	3,5	4	5,3	6,4
	Product grade	A	max.	1,225	1,525	1,825	2,125	2,925	3,65	4,15	5,45	6,58
			min.	0,975	1,275	1,575	1,875	2,675	3,35	3,85	5,15	6,22
	Product grade	B	max.	1,3	1,6	1,9	2,2	3,0	3,26	4,24	5,54	6,69
			min.	0,9	1,2	1,5	1,8	2,6	3,26	3,76	5,06	6,11
*k*w	Product grade	A	min.	0,68	0,89	1,10	1,31	1,87	2,35	2,70	3,61	4,35
		B		0,63	0,84	1,05	1,26	1,82	2,28	2,63	3,54	4,28
r			min.	0,1	0,1	0,1	0,1	0,2	0,2	0,25	0,4	0,4
s	nom.		max.	3,20	4,00	5,00	5,50	7,00	8,00	10,00	13,00	16,00
	Product grade	A	min.	3,02	3,82	4,82	5,32	6,78	7,78	9,78	12,73	15,73
		B		2,90	3,70	4,70	5,20	6,64	7,64	9,64	12,57	15,57

	Product grade				l_s and l_g																	
	A		B		l_s	l_g	l_s	l_g	l_s	l_g	l_s	l_g	l_s	l_g	l_s	l_g	l_s	l_g	l_s	l_g	l_s	l_g
nom.	min.	max.	min.	max.	min.	max.	min.	max.	min.	max.	min.	max.	min.	max.	min.	max.	min.	max.	min.	max.	min.	max.
12	11.65	12.35			1.2	3																
16	15.65	16.35			5.2	7	4	6	2.75	5												
20	19.58	20.42	18.95	21.05			8	10	6.75	9	5.5	8										
25	24.58	25.42	23.95	26.05					11.75	14	10.5	13	7.5	11	5	9						
30	29.58	30.42	28.95	31.05							15.5	18	12.5	16	10	14	7	12				
35	34.5	35.5	33.75	36.25									17.5	21	15	19	12	17				
40	39.5	40.5	38.75	41.25									22.5	26	20	24	17	22	11.75	18		
45	44.5	45.5	43.75	46.25											25	29	22	27	16.75	23	11.5	19
50	49.5	50.5	48.75	51.25											30	34	27	32	21.75	28	16.5	24
55	54.4	55.6	53.5	56.5													32	37	26.75	33	21.5	29
60	59.4	60.6	58.5	61.5													37	42	31.75	38	26.5	34
65	64.4	65.6	63.5	66.5															36.75	43	31.5	39
70	69.4	70.6	68.5	71.5															41.75	48	36.5	44
80	79.4	80.6	78.5	81.5															51.75	58	46.5	54
90	89.3	90.7	88.25	91.75																	56.5	64
100	99.3	100.7	98.25	101.75																	66.5	74
110	109.3	110.7	108.25	111.75																		
120	119.3	120.7	118.25	121.75																		

[illegible] supplied to ISO 4017 [illegible] recommended

Table 1 (continued)

Dimensions in millimetres

Thread (d)			M16	M18	M20	M22	M24	M27	M30	M36	M42	M48
p4			1,5	2	2,5	2	3	3	3,5	4	4,5	5
[illegible]		b	[illegible]	[illegible]	[illegible]	[illegible]	[illegible]	—				
		c	[illegible]	[illegible]	[illegible]	[illegible]	[illegible]	[illegible]	[illegible]	[illegible]	—	—
		e	[illegible]	[illegible]	[illegible]	[illegible]	[illegible]	[illegible]	[illegible]	[illegible]	[illegible]	[illegible]
[illegible]		min.	[illegible]	[illegible]	[illegible]	[illegible]	[illegible]	[illegible]	[illegible]	[illegible]	[illegible]	[illegible]
		max.	[illegible]	[illegible]	[illegible]	[illegible]	[illegible]	[illegible]	[illegible]	[illegible]	[illegible]	[illegible]
[illegible]		max.	[illegible]	[illegible]	[illegible]	[illegible]	[illegible]	[illegible]	[illegible]	[illegible]	[illegible]	[illegible]
[illegible]	Product grade	A min.	[illegible]	[illegible]	[illegible]	[illegible]	—	—	—	—	—	—
		B	[illegible]	[illegible]	[illegible]	[illegible]	[illegible]	[illegible]	[illegible]	[illegible]	[illegible]	[illegible]
[illegible]	Product grade	A min.	[illegible]	[illegible]	[illegible]	[illegible]	—	—	—	—	—	—
		B	[illegible]	[illegible]	[illegible]	[illegible]	[illegible]	[illegible]	[illegible]	[illegible]	[illegible]	[illegible]
[illegible]	Product grade	A min.	[illegible]	[illegible]	[illegible]	[illegible]	[illegible]	—				
		B	[illegible]	[illegible]	[illegible]	[illegible]	[illegible]	[illegible]	[illegible]	[illegible]	[illegible]	[illegible]
[illegible]		max.	[illegible]	[illegible]	[illegible]	[illegible]	[illegible]	[illegible]	[illegible]	[illegible]	[illegible]	[illegible]
		min.	[illegible]	[illegible]	[illegible]	[illegible]	[illegible]	[illegible]	[illegible]	[illegible]	[illegible]	[illegible]
[illegible]	Product grade	A min.	[illegible]	[illegible]	[illegible]	[illegible]	[illegible]	[illegible]	[illegible]			
		B	[illegible]	[illegible]	[illegible]	[illegible]	[illegible]	[illegible]	[illegible]	[illegible]	[illegible]	[illegible]
[illegible]	Product grade	A min.	[illegible]	[illegible]	[illegible]	[illegible]	[illegible]	[illegible]	[illegible]			
		B	[illegible]	[illegible]	[illegible]	[illegible]	[illegible]	[illegible]	[illegible]	[illegible]	[illegible]	[illegible]
[illegible]		max.	[illegible]	[illegible]	[illegible]	[illegible]	[illegible]	[illegible]	[illegible]	[illegible]	[illegible]	[illegible]
		min.	[illegible]	[illegible]	[illegible]	[illegible]	[illegible]	[illegible]	[illegible]	[illegible]	[illegible]	[illegible]
[illegible]	Product grade	A min.	[illegible]	[illegible]	[illegible]	[illegible]	[illegible]	[illegible]	[illegible]			
		B	[illegible]	[illegible]	[illegible]	[illegible]	[illegible]	[illegible]	[illegible]	[illegible]	[illegible]	[illegible]
[illegible]		max.	[illegible]	[illegible]	[illegible]	[illegible]	[illegible]	[illegible]	[illegible]	[illegible]	[illegible]	[illegible]
		min.	[illegible]	[illegible]	[illegible]	[illegible]	[illegible]	[illegible]	[illegible]	[illegible]	[illegible]	[illegible]
[illegible]	Product grade	A min.	[illegible]	[illegible]	[illegible]	[illegible]	—	—	—			
		B	[illegible]	[illegible]	[illegible]	[illegible]	[illegible]	[illegible]	[illegible]	[illegible]	[illegible]	[illegible]
		max.	[illegible]	[illegible]	[illegible]	[illegible]	[illegible]	[illegible]	[illegible]	[illegible]	[illegible]	[illegible]
		min.	[illegible]	[illegible]	[illegible]	[illegible]	[illegible]	[illegible]	[illegible]	[illegible]	[illegible]	[illegible]
[illegible]	Product grade	A min.	[illegible]	[illegible]	[illegible]	[illegible]	—	—	—	—		
		B	[illegible]	[illegible]	[illegible]	[illegible]	[illegible]	[illegible]	[illegible]	[illegible]	[illegible]	[illegible]

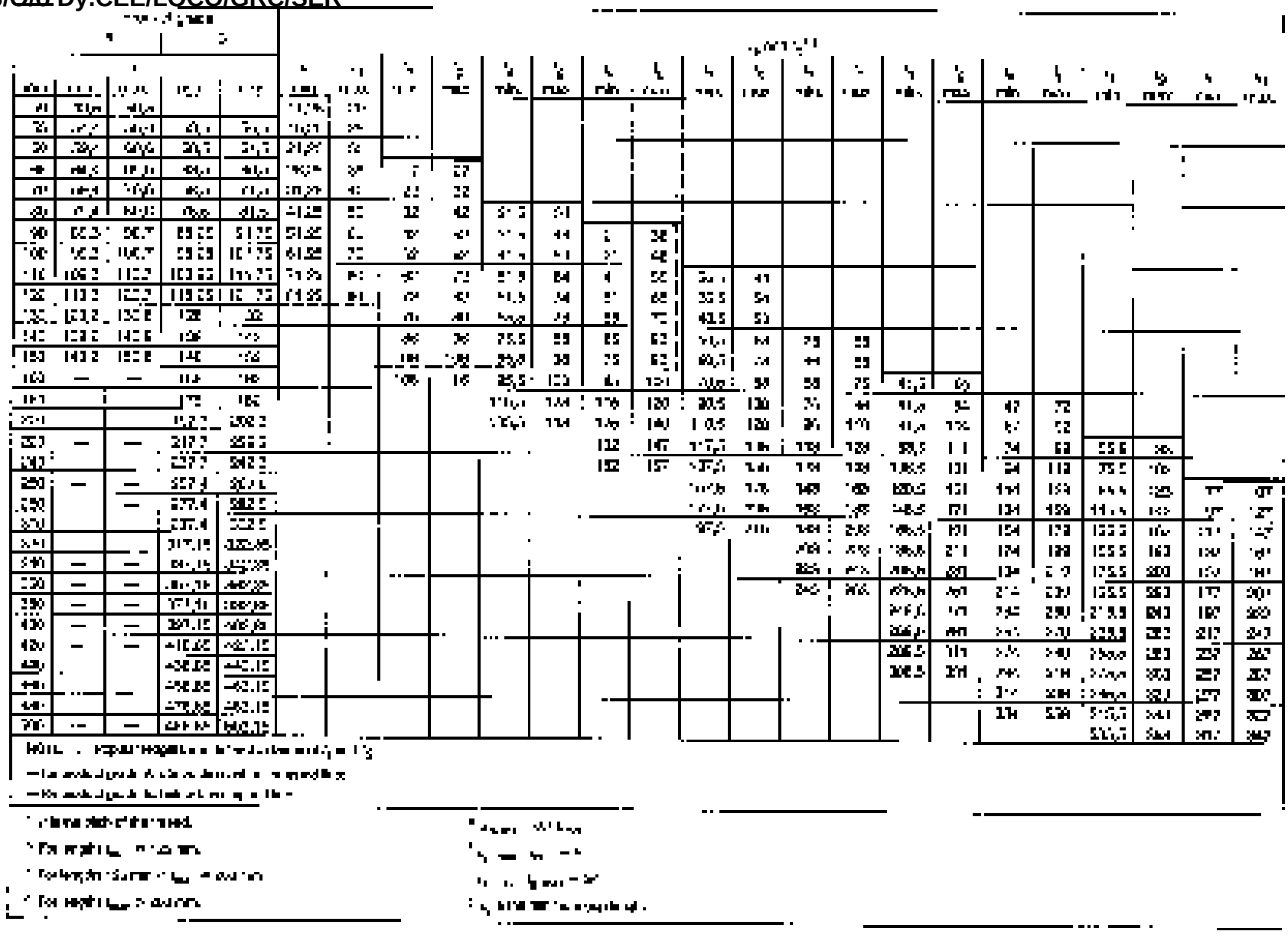

Table 2 — Non-preferred threads

Dimensions in millimetres

Thread size, *d*			M3.5	M14	M18	M22	M27
P^{a}			0.6	2	2.5	2.5	3
b ref.		$l \le 125$	13	34	42	50	60
		$125 < l \le 200$	19	40	48	56	66
		$l > 200$	32	53	61	69	79
c		max.	0.40	0.60	0.8	0.8	0.8
		min.	0.15	0.15	0.2	0.2	0.2
d_a		max.	4	16.7	21.2	26.4	32.4
d_s		nom. = max.	3.50	14.00	18.00	22.00	27.00
	Product grade	A min.	3.32	13.73	17.73	21.67	—
		B min.	3.20	13.57	17.57	21.48	26.48
d_w	Product grade	A min.	5.07	19.64	25.34	31.71	—
		B min.	4.95	19.15	24.85	31.35	38
e	Product grade	A min.	6.58	23.36	30.14	37.72	—
		B min.	6.44	22.78	29.56	37.29	45.2
l_f		max.		3	3	4	6
k		nom.	2.4	8.8	11.5	14	17
	Product grade	A max.	2.525	8.98	11.715	14.215	—
		A min.	2.275	8.62	11.285	13.785	—
		B max.	2.6	9.09	11.85	14.35	17.35
		B min.	2.2	8.51	11.15	13.65	16.65
$k_w{}^{b}$	Product grade	A min.	1.59	6.03	7.9	9.65	—
		B min.	1.54	5.96	7.81	9.56	11.66
r		min.	0.1	0.6	0.6	0.8	
s		nom. = max.	6.00	21.00	27.00	34.00	41
	Product grade	A min.	5.82	20.67	26.67	33.38	
		B min.	5.70	20.16	26.16	33.00	40

l					l_s and $l_g{}^{c}$									
	Product grade A		Product grade B											
nom.	min.	max.	min.	max.	l_s min.	l_g max.	l_s min.	l_g max.	l_s min.	l_g max.	l_s min.	l_g max.	l_s min.	l_g max.
20	19.58	20.42	—	—	4	7								
25	24.58	25.42			9	12								
30	29.58	30.42			14	17								
35	34.5	35.5	—	—	19	22								
40	39.5	40.5	38.75	41.25										
45	44.5	45.5	43.75	46.25										
50	49.5	50.5	48.75	51.25										
55	54.4	55.6	53.5	56.5										
60	59.4	60.6	58.5	61.5			16	26						
65	64.4	65.6	63.5	66.5			21	31						
70	69.4	70.6	68.5	71.5			26	36	15.5	28				
80	79.4	80.6	78.5	81.5			36	46	25.5	38				
90	89.3	90.7	88.25	91.75			46	56	35.5	48	27.5	40		
100	99.3	100.7	98.25	101.75			56	66	45.5	58	37.5	50	25	40
110	109.3	110.7	108.25	111.75			66	76	55.5	68	47.5	60	35	50
120	119.3	120.7	118.25	121.75			76	86	65.5	78	57.5	70	45	60
130	129.2	130.8	128	132			80	90	69.5	82	61.5	74	49	64
140	139.2	140.8	138	142			90	100	79.5	92	71.5	84	59	74
150	149.2	150.8	148	152					89.5	102	81.5	94	69	84
160	—	—	158	162					99.5	112	91.5	104	79	94
180			178	182					119.5	132	111.5	124	99	114
200			197.7	202.3							131.5	144	119	134
220	—	—	217.7	222.3							138.5	151	126	141
240	—	—	237.7	242.3									146	161
260			257.4	262.6									166	181

For sizes above the line, screws threaded to ISO 4017 are recommended.

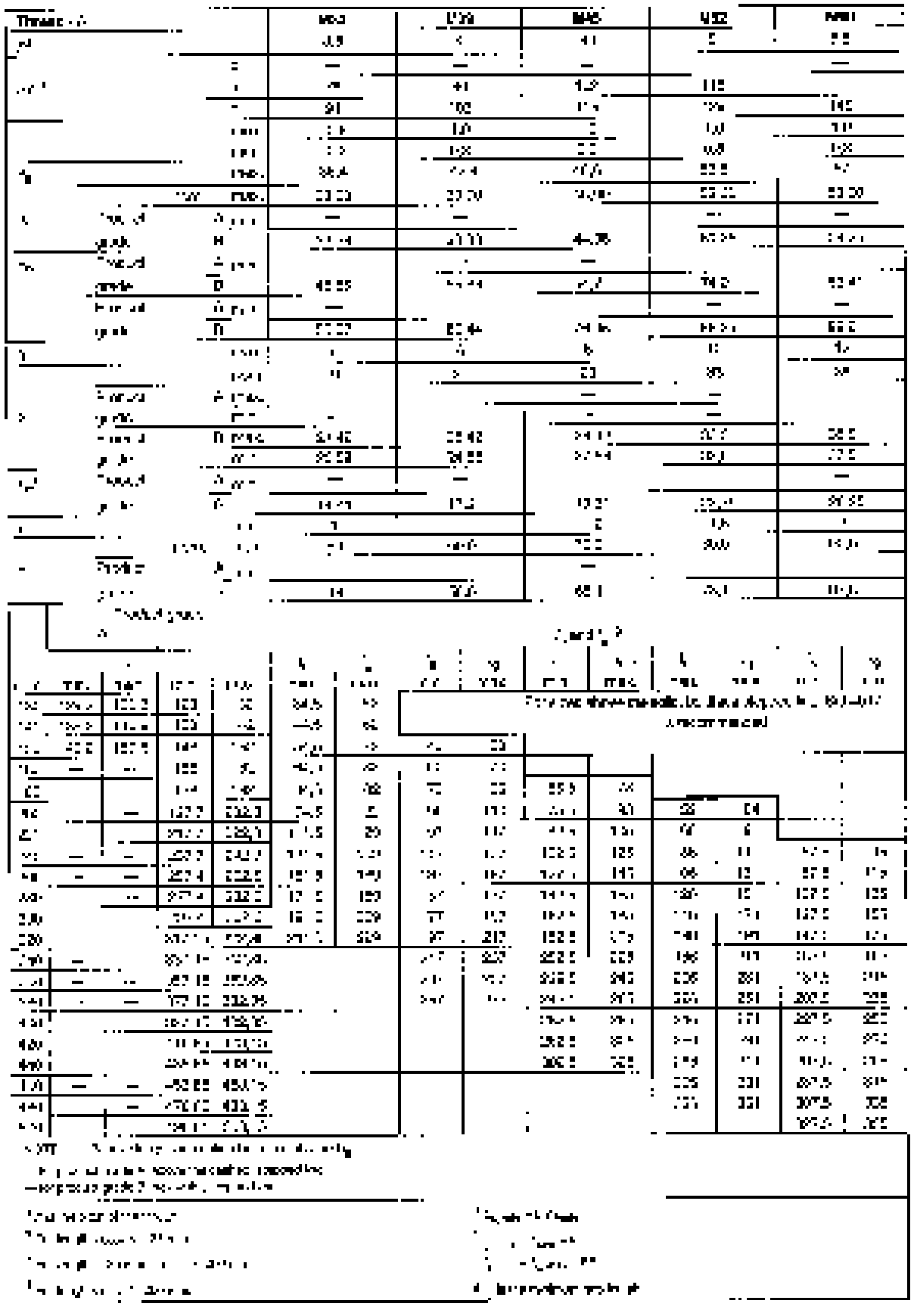

3047931/2026/O/o Dy.CEE/LOCO/GRC/SER

4 Specifications and reference standards

See Table 3.

Table 3 — Specifications and reference standards

Material		Steel	Stainless steel	Non-ferrous metal
General requirements	Not applicable	ISO 8992		
Threads	Tolerances	6g		
	International Standards	ISO 965-1, ISO 965-2		
Mechanical properties	Property class	8.8 (for nominal diameter d ≤ 16 mm), 9.8 (for d > 16 mm) to agreed	A2-70, A4-70 (for d ≤ 24 mm), A2-50, A4-50 (for d > 24 mm) to agreed	Materials specification in ISO 3506
	Tolerances	6g (for nominal diameter d ≤ 3 mm and d > 39 mm) to agreed	6g (for d ≤ 39 mm) to agreed	
Dimensions	Tolerances	Tolerance product grade A (for d ≤ 24 mm) or tolerance product grade B (for d > 24 mm)		
	International Standards	ISO 4759-1		
Finish and/or coating		Not specified	Plain	Plain
		Requirements for electrodeposited coatings are given in ISO 4042		Requirements for electrodeposited coatings are given in ISO 4042
		Requirements for non-electrodeposited coatings are given in ISO 10683		
		Tolerances and other specific requirements are described or requirements are needed. If applicable, they should be agreed between purchaser and supplier.		
		Surface defects Acceptance are described in ISO 6157-1		
Acceptability		Conformance shall be verified by ISO 3269.		

- For other property classes see ISO 898-1, for steel and ISO 3506-1 for stainless steel mechanical properties.
- Stainless steel.

5 Designation

EXAMPLE

A hexagon head bolt with thread M12, nominal length l = 80 mm, property class 8.8 is designated as follows:

Hexagon head bolt ISO 4014 - M12 × 80 - 8.8

Bibliography

[1] ISO 4016 : 1979, Hexagon head bolts — Product grade C — Chamfered shank (shank diameter approximately equal to pitch diameter).

[2] ISO 4018 : 1999, Hexagon head screws — Product grade C.

[3] ISO 4032 : 1999, Hexagon nuts, style 1 — Product grades A and B.

[4] ISO 4034 : 1999, Hexagon nuts — Product grade C.

[5] ISO 4035 : 1999, Hexagon thin nuts, style 1 — Product grades A and B.

[6] ISO 4036 : 1999, Hexagon thin nuts, style 2 — Product grades A and B.

[7] ISO 4161 : 1999, Hexagon nuts — Product grade C.

[8] ISO 4775 : 1984, Hexagon flat nuts (chamfered) — Product grades A and B.

[9] ISO 4776 : 1984, Hexagon flat nuts (unchamfered) — Product grade A.

[10] ISO 4161 : 1984, Hexagon nuts with flange — Coarse thread.

[11] ISO 4162 — Hexagon nuts with flange — Small series — Fine pitch thread (in preparation).

[12] ISO 4775 : 1984, Hexagon nuts for high strength structural bolting with large across flats — Product grade C — Property classes 8 and 10.

[13] ISO 4775 : 1984, Hexagon nuts for high strength structural bolting with large across flats (Small series according to ISO 962) — Product grade C — Property classes 8.8 and 10.9.

[14] ISO 7411 : 1984, Hexagon nuts for non-extensible structural bolting with large across flats (short thread length) — Product grade C — Property classes 8.8 and 10.9.

[15] ISO 7412 : 1984, Hexagon nuts for structural bolting, style 1, hot dip galvanized (protective layered) — Product grades A and B — Property classes 5, 8 and 9.

[16] ISO 4164 : 1984, Hexagon nuts for structural bolting with large across flats, style 1 — Product grade B — Property class 10.

[17] ISO 7413 : 1984, Hexagon nuts for structural bolting, style 2, hot dip galvanized (protective layered) — Product grade A — Property class 8.

[18] ISO 8673 : 1988, Hexagon nuts, style 1, with metric fine pitch thread — Product grades A and B.

[19] ISO 8674 : 1988, Hexagon nuts, style 2, with metric fine pitch thread — Product grades A and B.

[20] ISO 8673 : 1988, Hexagon nuts (chamfered), with metric fine pitch thread — Product grades A and B.

[21] ISO 8674 : 1988, Hexagon nuts (chamfered), with metric fine pitch thread — Product grades A and B.

(Continued from inside front cover) (Price Group 11)

(23) ISO 8676:1989, Hexagon head bolts with metric fine pitch thread — Product grades A and B

(24) ISO 8765:1988, Hexagon head bolts with metric fine pitch thread — Product grade A.

Bureau of Indian Standards

BIS is a statutory institution established under the *Bureau of Indian Standards Act*, 1986 to promote harmonious development of the activities of standardization, marking and quality certification of goods and attending to connected matters in the country.

Copyright

BIS has the copyright in all its publications. No part of these publications may be reproduced in any form without the prior permission in writing of BIS. This does not preclude the free use, in the course of implementing the standard, of necessary details, such as symbols and sizes, type or grade designations. Enquiries relating to copyright be addressed to the Director (Publications), BIS.

Revision of Indian Standards

Amendments are issued to standards as the need arises on the basis of comments. Standards are also reviewed periodically; a standard along with amendments is reaffirmed when such review indicates that no changes are needed; if the review indicates that changes are needed, it is taken up for revision. Users of Indian Standards should ascertain that they are in possession of the latest amendments or edition by referring to the latest issue of 'BIS Catalogue' and 'Standards: Monthly Additions'.

This Indian Standard has been developed from Doc. No. PGD 31 (0).

Amendments Issued Since Publication

Amend No.	Date of Issue	Text Affected

BUREAU OF INDIAN STANDARDS

Headquarters:

Manak Bhavan, 9 Bahadur Shah Zafar Marg, New Delhi 110002 — Telephones: Manak Bhavan 323 01 31, 323 33 75, 323 94 02 (Common to all offices)

Regional Offices:		Telephone
Central	: Manak Bhavan, 9 Bahadur Shah Zafar Marg, NEW DELHI 110002	323 76 17, 323 38 41
Eastern	: 1/14 C.I.T. Scheme VII M, V.I.P. Road, Kankurgachi, KOLKATA 700054	337 84 99, 337 85 61, 337 86 26, 337 91 20
Northern	: SCO 335-336, Sector 34-A, CHANDIGARH 160022	60 38 43, 60 20 25
Southern	: C.I.T. Campus, IV Cross Road, CHENNAI 600113	254 12 16, 254 14 42, 254 25 19, 254 13 15
Western	: Manakalaya, E9 MIDC, Marol, Andheri (East), MUMBAI 400093	832 92 95, 832 78 58, 832 78 91, 832 78 92

Branches: AHMEDABAD. BANGALORE. BHOPAL. BHUBANESHWAR. COIMBATORE. FARIDABAD. GHAZIABAD. GUWAHATI. HYDERABAD. JAIPUR. KANPUR. LUCKNOW. NAGPUR. PATNA. PUNE. RAJKOT. THIRUVANANTHAPURAM. VISAKHAPATNAM.

Printed at Nirmal Printing Press, Delhi

3047931/2026/O/o Dy.CEE/LOCO/GRC/SER

इंटरनेट मानक

Disclosure to Promote the Right To Information

Whereas the Parliament of India has set out to provide a practical regime of right to information for citizens to secure access to information under the control of public authorities, in order to promote transparency and accountability in the working of every public authority, and whereas the attached publication of the Bureau of Indian Standards is of particular interest to the public, particularly disadvantaged communities and those engaged in the pursuit of education and knowledge, the attached public safety standard is made available to promote the timely dissemination of this information in an accurate manner to the public.

"जानने का अधिकार, जीने का अधिकार"
Mazdoor Kisan Shakti Sangathan
"The Right to Information, The Right to Live"

"पुराने को छोड नये के तरफ"
Jawaharlal Nehru
"Step Out From the Old to the New"

IS 1367-3 (2002): Technical Supply Conditions for Threaded Steel Fasteners, Part 3: Mechanical Properties of Fasteners Made of Carbon Steel and Alloy Steel - Bolts, Screws and Studs [PGD 31: Bolts, Nuts and Fasteners Accessories]

"ज्ञान से एक नये भारत का निर्माण"
Satyanarayan Gangaram Pitroda
"Invent a New India Using Knowledge"

"ज्ञान एक ऐसा खजाना है जो कभी चुराया नहीं जा सकता है"
Bhartṛhari—Nītiśatakam
"Knowledge is such a treasure which cannot be stolen"

BLANK PAGE

BRUTUM FULMEN

PROTECTED BY COPYRIGHT

3047931/2026/O/o Dy.CEE/LOCO/GRC/SER

IS 1367 (Part 3) : 2002
ISO 898-1 : 1999

भारतीय मानक

इस्पात के चूड़ीदार बंधकों की तकनीकी पूर्ति शर्तें

भाग 3 कार्बन स्टील एवं एलॉय स्टील के बने बंधकों के यांत्रिक गुण धर्म — बोल्ट, पेंच एवं स्टड्स

(चौथा पुनरीक्षण)

Indian Standard

TECHNICAL SUPPLY CONDITIONS FOR THREADED STEEL FASTENERS

PART 3 MECHANICAL PROPERTIES OF FASTENERS MADE OF CARBON STEEL AND ALLOY STEEL — BOLTS, SCREWS AND STUDS

(Fourth Revision)

ICS 21.060.10

© B.I.S. 2002

BUREAU OF INDIAN STANDARDS
MANAK BHAVAN, 9 BAHADUR SHAH ZAFAR MARG
NEW DELHI 110002

December 2002

Price Group 10

Bolts, Nuts and Fasteners Accessories Sectional Committee, PD 30

NATIONAL FOREWORD

This Indian Standard (Fourth Revision) which is identical with ISO 898-1 : 1999 "Mechanical properties of fasteners made of carbon steel and alloy steel — Part 1 Bolts, screws and studs" issued by the International Organization for Standardization (ISO) was adopted by the Bureau of Indian Standards on the recommendations of the Bolts, Nuts and Fasteners Accessories Sectional Committee and approval of the Basic and Production Engineering Division Council.

IS 1367 which covers the "Technical supply conditions for threaded steel fasteners" was originally published in 1967 and first revised in 1987. In the late seventies, the second revision was taken up when the work of ISO/TC 2, "Fasteners" taken up standardization of our national work on industrial fasteners. Accordingly, the Committee decided that IS 1367 should be brought out into several parts, each part covering a particular feature or property of the fasteners. Subsequently, the second revision of this standard was published in 1979. The third revision was published in 1987 by adoption of ISO 898-1 : 1988. This fourth revision has been prepared by adoption of latest edition of ISO 898-1 published in 1999.

The text of ISO Standard has been approved as suitable for publication as Indian Standard without deviation. Certain terminology and conventions are, however, not identical to those used in the Indian Standards. Attention is drawn especially to the following:

a) Wherever the words 'International Standard' appear relating to this standard, they should be read as 'Indian Standard'.

b) Comma (,) has been used as a decimal marker, while in Indian Standards, the current practice is to use a point (.) as the decimal marker.

In this adopted standard, reference appears to certain International Standards for which Indian Standards also exist. The corresponding Indian Standards which are to be substituted in their place are listed below along with their degree of equivalence for the editions indicated:

International Standard	Corresponding Indian Standard	Degree of Equivalence
ISO 68-1 : 1998	IS 4218 (Part 1) : 1999 ISO General purpose metric screw thread: Part 1 Basic profile (second revision)	Identical
ISO 83 : 1976	IS 1499 : 1977 Method for Charpy impact test (U-notch) for metals (first revision)	Technically equivalent
ISO 261 : 1998	IS 4218 (Part 2) : 2001 ISO General purpose metric screw threads: Part 2 General Plan (second revision)	Identical
ISO 262 : 1998	IS 4218 (Part 4) : 2001 ISO General purpose metric screw threads. Part 4 Selected sizes for screws, bolts and nuts (second revision)	do
ISO 724 : 1978*	IS 4218 (Part 2) : 1999 ISO General purpose metric screw threads. Part 3 Basic dimensions (second revision)	do
ISO 898-2 : 1992	IS 1367 (Part 6) : 1991 Technical supply conditions for threaded steel fasteners: Part 6 Mechanical properties and test methods for nuts with specified proof loads (third revision)	do

* Since withdrawn in 1993.

3047931/2026/O/o Dy.CEE/LOCO/GRC/SER

International Standard	Corresponding Indian Standard	Degree of Equivalence
ISO 303-5 : 1996	IS 1367 (Part 5) : 2002 Technical supply conditions for threaded steel fasteners: Part 5 Mechanical properties and test methods for set screws and similar threaded fasteners not under tensile stresses (third revision)	Identical[1]
ISO 898-7 : 1992	IS 1367 (Part 20) : 1986 Industrial fasteners — Threaded steel fasteners — Technical supply conditions — Mechanical properties: Part 20 torsional test and minimum torques for bolts and screws with nominal diameters 1 mm to 10 mm	do
ISO 965-1 : 1998	IS 14962 (Part 1) : 2001 ISO General purpose metric screw threads — Tolerances: Part 1 Principles and basic data	do
ISO 965-2 : 1998	IS 14962 (Part 2) : 2001 ISO General purpose metric screw threads — Tolerances: Part 2 Limits of sizes for general purpose external and internal screw threads — Medium quality	do
ISO 9269 : [illegible]	IS 1367 (Part 17) : 1986[2] Industrial fasteners - Threaded steel fasteners – Technical supply conditions: Part 17 Inspection, sampling and acceptance procedure (third revision)	do
ISO 4042 : 1999	IS 1367 (Part 11) : 2002 Technical supply conditions for threaded steel fasteners: Part 11 Electroplated coatings (third revision)	do
ISO 4759-1 :[illegible]	IS 1367 (Part 21) : 2002 Technical supply conditions for threaded steel fasteners: Part 2 Product grades and tolerances (third revision)	do
ISO 6157-1 : 1988	IS 1367 (Part 9/Sec 1) : 1990 Technical supply conditions for threaded steel fasteners : Part 9 Surface discontinuities, Section 1 Bolts, screws and studs for general applications (third revision)	do
ISO 6157-2 : 1995	IS 1367 (Part 10) : 2000 Technical supply conditions for threaded steel fasteners : Part 10 Surface discontinuities — Nuts (third revision)	do
ISO 6157-3 : 1988	IS 1367 (Part 9/Sec 2) : 1990 Technical supply conditions for threaded steel fasteners : Part 9 Surface discontinuities, Section 2 Bolts, screws and studs for special applications (third revision)	do
ISO 6506 : 1981	IS 1500 : 1983 Method for Brinell hardness test for metallic materials (second revision)	Technically equivalent

[1] To be published (Revision of IS 0 : 1998).

[2] Identical with ISO 9269 : 1991.

[3] Being published in 2003.

International Standard	Corresponding Indian Standard	Degree of Equivalence
ISO 6507-1 : 1997	IS 1501 (Part 1) : 1984*) Method for Vickers hardness test for metallic materials : Part 1 HV 5 to HV 100 (second revision)	Technically equivalent
ISO 6508 : 1986	IS 1586 : 2000 Method for Rockwell hardness test for metallic materials (scales A, B, C, D, E, F, G, H, K, 15 N, 30 N, 45 N, 15 T, 30 T and 45 T) (third revision)	do
ISO 6892 : 1998	IS 1608 : 1995 Mechanical testing of metals — Tensile testing (second revision)	Related
ISO 9329 : 1994	IS 1367 (Part 1) : 2002 Technical supply conditions for threaded steel fasteners : Part 1 Introduction and general requirements (third revision)	Identical

In reporting the results of a test or analysis made in accordance with this standard, if the final value, observed or calculated, is to be rounded off, it shall be done in accordance with IS 2 : 1960 'Rules for rounding off numerical values (revised)'.

*) Superseded by ISO 6507 : 1997 which has been revised in 1997.

Indian Standard

TECHNICAL SUPPLY CONDITIONS FOR THREADED STEEL FASTENERS

PART 3 MECHANICAL PROPERTIES OF FASTENERS MADE OF CARBON STEEL AND ALLOY STEEL — BOLTS, SCREWS AND STUDS

(Fourth Revision)

1 Scope

This part of ISO 898 specifies the mechanical properties of bolts, screws and studs made of carbon steel and alloy steel when tested at an ambient temperature range of 10 °C to 35 °C.

Products conforming to the requirements of this part of ISO 898 are evaluated only in the ambient temperature range and may not meet the specified mechanical and physical properties at higher and lower temperatures. Attention is drawn to annex A which provides examples of lower yield stress and stress at 0.2 % non-proportional elongation at elevated temperatures.

At temperatures lower than the ambient temperature range, a significant change in the properties, particularly impact strength, may occur. When fasteners are to be used above or below the ambient temperature range it is the responsibility of the user to ensure that the mechanical and physical properties are suitable for his particular service conditions.

Certain fasteners may not fulfil the tensile or torsional requirements of this part of ISO 898 because of the geometry of the head which reduces the shear area in the head as compared to the stress area in the thread such as countersunk, raised countersunk and cheese heads (see figure 8).

This part of ISO 898 applies to bolts, screws and studs

— with coarse pitch thread M1,6 to M39, and fine pitch thread M8 × 1 to M39 × 3;

with metric ISO thread in accordance with ISO 68-1;

— with dimensions and tolerances in accordance with ISO 261 and ISO 262;

with thread tolerance in accordance with ISO 965-1 and ISO 965-2;

— made of carbon steel or alloy steel.

It does not apply to self-tapping screws and similar threaded fasteners not under tensile stresses (see ISO 1891).

It does not specify requirements for such properties as

— weldability;

— corrosion resistance;

— ability to withstand low temperatures above 1 300 °C (+ 250 °C for 10.9) or below − 50 °C;

resistance to shear stress;

— fatigue resistance.

NOTE — The designation system of this part of ISO 898 may be used for sizes outside the limits laid down in this clause (e.g. d > 39 mm) provided that all mechanical requirements of the property classes are met.

2 Normative references

The following standards contain provisions which, through reference in this text, constitute provisions of this part of ISO 898. At the time of publication, the editions indicated were valid. All standards are subject to revision, and parties to agreements based on this part of ISO 898 are encouraged to investigate the possibility of applying the most recent editions of the standards indicated below. Members of IEC and ISO maintain registers of currently valid International Standards.

ISO 68-1:1998, *ISO general purpose screw threads — Basic profile — Part 1: Metric screw threads.*

ISO 83:1976, *Steel — Charpy impact test (U-notch).*

ISO 261:1998, *ISO general purpose metric screw threads — General plan.*

ISO 262:1998, *ISO general purpose metric screw threads — Selected sizes for screws, bolts and nuts.*

ISO 273:1979, *Fasteners — Clearance holes for bolts and screws.*

ISO 724:1993, *ISO general purpose metric screw threads — Basic dimensions.*

ISO 898-2:1992, *Mechanical properties of fasteners made of carbon steel and alloy steel — Part 2: Nuts with specified proof load values — Coarse thread.*

ISO 898-5:1998, *Mechanical properties of fasteners made of carbon steel and alloy steel — Part 5: Set screws and similar threaded fasteners not under tensile stresses.*

ISO 898-7:1992, *Mechanical properties of fasteners made of carbon steel and alloy steel — Part 7: Torsional test and minimum torques for bolts and screws with nominal diameters 1 mm to 10 mm.*

ISO 965-1:1998, *ISO general purpose metric screw threads — Tolerances — Part 1: Principles and basic data.*

ISO 965-2:1998, *ISO general purpose metric screw threads — Tolerances — Part 2: Limits of sizes for general purpose external and internal screw threads — Medium quality.*

ISO 6157-1:1988, *Fasteners — Surface discontinuities — Part 1: Bolts, screws and studs for general requirements.*

ISO 6157-3:1988, *Fasteners — Surface discontinuities — Part 3: Bolts, screws and studs for special requirements.*

ISO 6506:1981, *Metallic materials — Hardness test — Brinell test.*

ISO 6507-1:1997, *Metallic materials — Hardness test — Vickers test — Part 1: Test method.*

ISO 6508:1986, *Metallic materials — Hardness test — Rockwell test (scales A - B - C - D - E - F - G - H - K).*

ISO 6892:1998, *Metallic materials — Tensile testing at ambient temperature.*

3 Designation system

The designation system for property classes of bolts, screws and studs is shown in table 1. The abscissae show the nominal tensile strength values, R_m, in newtons per square millimetre, while the ordinates show those of the minimum elongation after fracture, A_{min}, as a percentage.

The property class symbol consists of two figures.

— the first figure indicates 1/100 of the nominal tensile strength in newtons per square millimetre (see 5.1 and table 3);

— the second figure indicates 10 times the ratio between lower yield stress R_{el} (or stress at 0,2 % non-proportional elongation $R_{p0,2}$) and nominal tensile strength $R_{m\,nom}$ (yield stress ratio).

The multiplication of these two figures will give the 1/10 of the yield stress in newtons per square millimetre.

The minimum shear yield stress $R_{s\,min}$ (or minimum stress at 0,2% non-proportional elongation, $R_{p0,2\,min}$) and minimum tensile strength $R_{m\,min}$ are equal to or greater than the nominal values (see table 3).

4 Materials

Table 2 specifies steels and tempering temperatures for the different property classes of bolts, screws and studs.

The chemical composition shall be assessed in accordance with the relevant ISO standards.

5 Mechanical and physical properties

When tested by the methods described in clause 6, the bolts, screws and studs shall, at ambient temperature, have the mechanical and physical properties set out in table 3.

3047931/2026/O/o Dy.CEE/LOCO/GRC/SER

Table 1 — System of coordinates

Nominal tensile strength $R_{m,nom}$ N/mm²	300	400	500	600	700	800	900	1 000	1 200	1 400
Minimum elongation after fracture, A_{min} percent: 7										
8										
9				8.8					12.9	
10								10.9		
12			5.8				10.9			
14						8.8				
16			4.8							
18										
20										
22			5.6							
25		4.8								
30	3.6									
40										

Relationship between yield stress and tensile strength			
Second figure of symbol	6	8	9
$\frac{\text{Lower yield stress } R_{el}{}^{b}}{\text{Nominal tensile strength } R_{m,nom}} \times 100\ \%$	nil	80	90
or			
$\frac{\text{Stress at 0,2 % non-proportional elongation } R_{p0,2}{}^{b}}{\text{Nominal tensile strength } R_{m,nom}} \times 100\ \%$			

NOTE — Although a great number of property classes are specified in this part of ISO 898, this does not mean that all classes are appropriate for all items. Further guidance for application of the specific property classes is given in the relevant product standards. For non-standard items, it is advisable to follow as closely as possible the choice already made for similar standard items.

[a] Applies only to thread diameter $d \geq 16$ mm.

[b] Nominal values according to table 3 apply.

Table 2 — Steels

Property class	Material and treatment	Chemical composition limits (check analysis) % (m/m)					Tempering temperature
		C		P	S	B[a]	°C
		min.	max.	max.	max.	max.	min.
3.6	Carbon steel	–	0,20	0,05	0,06	0,003	–
4.6[b]			0,55	0,05	0,06	0,003	–
4.8[c]							
5.6		0,13	0,55	0,05	0,06		
5.8[b]			0,55	0,05	0,06	0,003	
6.8[b]							
8.8[c]	Carbon steel with additives (e.g. B, Mn or Cr) quenched and tempered	0,15[d]	0,40	0,035	0,035	0,003	425
	Carbon steel quenched and tempered	0,25	0,55	0,035	0,035		
9.8	Carbon steel with additives (e.g. B, Mn or Cr) quenched and tempered	0,15[d]	0,35	0,035	0,035	0,003	425
	Carbon steel quenched and tempered	0,25	0,55	0,035	0,035		
10.9[e]	Carbon steel with additives (e.g. B, Mn or Cr) quenched and tempered	0,15[d]	0,35	0,035	0,035	0,003	340
10.9[f]	Carbon steel quenched and tempered	0,25	0,55	0,035	0,035	0,003	425
	Carbon steel with additives (e.g. B, Mn or Cr) quenched and tempered	0,20[d]	0,55	0,035	0,035		
	Alloy steel quenched and tempered[g]	0,20	0,55	0,035	0,035		
12.9[e][f]	Alloy steel quenched and tempered[g]	0,25	0,50	0,035	0,035	0,003	380

[a] Boron content can reach the limits specified in column 6 only if it is ensured by additions of boron-containing steels that the non-effective boron is controlled by additions of titanium and/or aluminium.

[b] Free cutting steel is allowed for these property classes with the following maximum sulfur, phosphorus and lead contents: sulfur 0,34 %, phosphorus 0,11 %, lead 0,35 %.

[c] For nominal stress cross 20 mm the steels specified for property classes 8.8 may be necessary in order to achieve sufficient hardenability.

[d] In case of plain carbon boron steel with a carbon content below 0,30 % (ladle analysis), the minimum manganese content shall be 0,7 % for property class 8.8 and 0,7 % for 9.8, 10.9 and 12.9.

[e] Property class 10.9 is not intentionally obtained by martensitic hardening (see property classes 10.8 and 12.9). All properties of 10.9 are obtained in future ISO 898-2 (in preparation). However, by lower temperature tempering (see 8.8 and 9.8) a different power relaxation characteristic of the material can be achieved.

For the proof load of these property classes, it is recommended that there should be a sufficient hardenability to ensure a structure consisting of at least approximately 90 % martensite in the core of the threaded section in the fastener in the quenched condition before tempering.

[f] For alloy steel and carbon steel containing one or more of the following elements in the minimum quantity given: chromium 0,30 %, nickel 0,30 %, molybdenum 0,20 %, vanadium 0,10 %, other elements are specified in combination of two, three or four and have alloy contents less than those given above, the limit value to be applied for class combination is 70 % of the sum of the individual limit values shown above for the two, three or four elements concerned.

[g] A metallographically detectable white phosphorus enriched layer is not permitted for property class 12.9 on surfaces subjected to tensile stress.

[h] The chemical composition and temperature temperature are under investigation.

3047931/2026/O/el Dy.CEE/LOCO/GRC/SER

Table 3 — Mechanical and physical properties of bolts, screws and studs

Property class	Mechanical or physical property	Property class									
		3.6	4.6	4.8	5.6	5.8	6.8	8.8[a]		9.8[a]	10.9
								$d \le 16$ mm	$d > 16$ mm		
9.1	Nominal tensile strength $R_{m\,nom}$ MPa	300	400		500		600	800		900	1 000
9.2	Minimum tensile strength $R_{m\,min}$ MPa	330	400	420	500	520	600	800	830	900	1 040
9.3	Lower yield stress R_{eL} MPa	180	240	320	300	400	480	640	640	720	900
	0,2 % proof stress $R_{p0,2}$ MPa	190	240	340	300	420	480	640	660	720	900
9.4	Elongation after fracture A %	25	22	14	20	10	8	12	12	10	9
	Reduction of area Z %	50						52	48	48	44
9.5	Impact strength K_V J	40	35	27	25	20	16	–	–		
	K_U J						–	30	25	25	20
	Hardness, Vickers HV	95	120	150	155	160	190	250	255	290	320
	Hardness, Brinell HB	90	114	142	147	152	181	238	242	276	304
	Hardness, Rockwell HRB	52	67	71	76	80	89	–	–		
	Hardness, Rockwell HRC						–	22	23	28	32
	Surface hardness HV0,3						390				
	Surface hardness HV30						–	238	247	276	304
9.6	Decarburization HV0,3										
9.7	Carburization depth G_{min} mm	0,015	0,015	0,015	0,015	0,015	0,015	–	–	–	–
	Carburization depth G_{max} mm	0,4	0,4	0,4	0,4	0,4	0,4	–	–	–	–
9.8	Surface defects	–	–	–	–	–	–	360	370	380	390
	Surface defects	–	–	–	–	–	–	340	350	360	370
9.9	Fracture type							Shall be specified			
9.10	Decarburization depth G mm	0,4	0,4	–	0,4	–	–	0,2	0,2	0,2	0,2
9.11	Hardness after tempering							320		340	360
9.12	Creep rupture strength	The values for $R_{m\,t}$, $R_{eL\,t}$ and $R_{p0,2\,t}$ shall be specified in the relevant product standard.									
9.13	Proof load stress S_p	–	–	310	–	380	450	580	600	650	830
9.14	Proof load	Not applicable									
9.15	Minimum ultimate torque $M_{u\,min}$							M_u		M_u	M_u
	Minimum torque for proof load M_p							M_p			
9.16	Thermal stability							Under consideration			
9.17	Low temperature impact	In accordance with ISO 21-1:1997, 20 °C ± 2 °C, 20 J/cm² minimum									

[a] For material properties of bolts, screws and studs of steel in accordance with ISO 898-2 and ISO 898-5 with property classes 8.8, 9.8 and 10.9 the values in ISO 898-1 are withdrawn.

[b] Applicable only to nominal diameter $d \ge 3$ mm.

[c] For bolts of 3 mm ≤ d ≤ 10 mm.

[d] Bolts with a length of less than 2,5 d are not subjected to the tensile test, but the properties shall be agreed between the manufacturer and the purchaser.

[e] When testing full-size bolts, screws and studs, the hardness shall be measured on the material of the head or point, if possible, in accordance with ISO 6507-1.

[f] Alternatively, surface hardness may be measured on a cross-section taken from the head or point.

[g] Bolts with a nominal diameter $d \le 10$ mm shall be tested in accordance with ISO 6506-1. Hardness measurements may also be made on the head or point, if possible, in accordance with ISO 6507-1. For property class 10.9, values in excess of those specified in ISO 6506-1 may occur.

[h] For material with a lower yield stress, R_{eL} shall be determined instead of proof stress $R_{p0,2}$. For the property classes 4.6, 5.6 and 6.8, the values for R_{eL} are given for information only. For the property class 9.8, the values for R_{eL} are given for information only in the case of flat products.

[i] The yield stress R_{eL} is not applicable for martensitic steels or martensitic-ferritic steels. For these steels, the 0,2 % proof stress $R_{p0,2}$ applies. For the property class 10.9, the 0,2 % proof stress $R_{p0,2}$ applies to quenched and tempered steels. These values are valid for bolts, screws and studs with a nominal diameter $d \ge 16$ mm.

6 Mechanical and physical properties to be determined

Two test programmes, A and B, for the mechanical and physical properties of bolts, screws and studs, using the methods described in clause 8, are set out in table 5. Regardless of the choice of test programme, all requirements of table 3 shall be met.

The application of programme B is always desirable, but is mandatory for products with ultimate tensile loads less than 500 kN if the application of programme A is not explicitly agreed.

Programme A is suitable for unidentified test pieces only if for bolts with a shank area less than the stress area.

Table 4 — Key to test programmes (see table 5)

Size	Bolts and screws with thread diameter $d \geq 3$ mm and length $l \geq 2,5\,d$ [a]	Bolts and screws with thread diameter $d < 3$ mm and length $l \geq 2,5\,d$
Test programme for acceptance	○	●
[a] Also bolts and screws with special head or shank configurations which are weaker than the threaded section		

Table 5 — Test programmes A and B for acceptance purposes

(These procedures apply to mechanical but not chemical properties)

Test group	Property		Test programme A				Test programme B			
			Test number	Test method	Proportion		Test number	Test method	Proportion	
					[illegible]	[illegible]			[illegible]	[illegible]
	[illegible]	Minimum [illegible]	[illegible]	Tensile test	●	●	[illegible]	[illegible]	●	●
	[illegible]	[illegible]	[illegible]	[illegible]	○	○	[illegible]	Hardness test[c]	○	○
		Maximum hardness			● ○	● ○			● ○	● ○
	[illegible]	Minimum [illegible]				● ○				● ○
II	[illegible]	Minimum lower yield stress $R_{eL\,min}$	[illegible]	Tensile test	●					
	[illegible]	Minimum [illegible] R_{eL}	[illegible]	Tensile test		●				
	[illegible]	[illegible] R_{p}					[illegible]	Proof stress test	●	●
	[illegible]	[illegible] R_{m}					[illegible]	Tensile test[b]		○
III	[illegible]	Minimum percentage elongation after fracture A_{min}[d]	[illegible]	Tensile test	●	●				
	[illegible]	[illegible] A_{min}	[illegible]	Tensile test		●				
	[illegible]	Strength under wedge loading[e]					[illegible]	Wedge bending test[e]	●	●
IV	[illegible]	Minimum impact energy[f]	[illegible]	[illegible]	● ○	●				
	[illegible]	Impact toughness[f]					[illegible]	Impact toughness test	○	○
V	[illegible]	Maximum decarburized zone	[illegible]	[illegible] test		● ○	[illegible]	Decarburization test		● ○
	[illegible]	Hardness after heat treatment	[illegible]	Thermoplastic test		● ○	[illegible]	Hardness test		● ○
	[illegible]	[illegible]	[illegible]	[illegible]	● ○	● ○	[illegible]	Strength [illegible]	● ○	● ○

a [illegible]

b [illegible]

c [illegible]

d [illegible]

e [illegible]

f [illegible]

g [illegible]

h [illegible]

i [illegible]

j [illegible]

7 Minimum ultimate tensile loads and proof loads

See Tables 8, 9, 10 and 11.

Table 8 — Minimum ultimate tensile loads — ISO metric coarse pitch thread

Thread[1]	Nominal stress area[2]	Property class									
		3.6	4.6	4.8	5.6	5.8	6.8	8.8	9.8	10.9	12.9
		Minimum ultimate tensile load $F_{u,min} = A_s \times R_{m,min}$ N									
M3	5.03	1 070	1 510	2 010	2 510	2 520	3 020	4 020	4 530	5 030	6 040
M3.5	6.78	2 040	2 710	2 850	3 390	3 400	4 070	5 420	6 100	6 780	8 140
M4	8.78	2 960	3 510	3 690	4 390	4 400	5 270	7 020	7 900	8 780	10 500
M5	14.2	4 830	5 680	5 680	6 810	6 820	8 510	11 350	12 800	14 200	17 000
M6	20.1	6 030	8 040	8 440	10 100	10 200	12 100	16 100	18 100	20 100	24 100
M7	28.9	8 670	11 000	12 100	14 400	15 300	17 300	23 100	26 000	28 900	34 700
M8	36.6	11 000	14 600	17 100	19 500	19 900	22 000	29 300	32 900	36 600	44 000
M10	58	17 400	23 200	24 400	29 000	30 000	34 800	46 400	52 200	58 000	70 000
M12	84.3	25 300	33 700	35 400	42 100	43 000	50 600	67 400	75 900	84 300	101 000
M14	115	34 500	46 000	48 300	57 500	59 000	69 000	92 000	104 000	115 000	140 000
M16	157	47 100	62 800	65 900	78 500	81 000	94 200	125 700	141 000	157 000	189 000
M18	192	57 600	76 800	80 700	96 000	99 000	115 200	153 600	—	192 000	231 000
M20	245	73 500	98 000	102 900	122 500	126 000	147 000	196 000	—	245 000	294 000
M22	303	90 900	121 000	127 000	151 500	156 000	182 000	242 000	—	303 000	364 000
M24	352	105 600	141 000	148 000	176 000	181 000	211 200	281 600	—	352 000	422 000
M27	459	137 700	183 600	193 000	230 000	236 000	275 400	367 200	—	459 000	550 000
M30	561	168 300	224 400	236 000	280 500	288 000	336 600	448 800	—	561 000	673 000
M33	694	208 200	277 600	292 000	347 000	356 000	416 400	555 200		694 000	833 000
M36	817	245 100	327 000	343 000	408 500	419 000	490 200	653 600		817 000	980 000
M39	976	292 800	390 400	410 000	488 000	500 000	585 600	781 000	—	976 000	1 170 000

1) Also for tapped holes and for bolts, screws and studs in which the length of thread is not specified. This is in accordance with ISO 261 and ISO 262.

2) For the calculation, A_s = ... mm².

3) Derived from ISO 898-2 and ISO 898-6, respectively.

3047931/2026/O/o Dy.CEE/LOCO/GRC/SER

Table 7 — Proof loads — ISO metric coarse pitch thread

Thread [a] d	Nominal stress area A_s [b] mm²	Property class									
		3.6	4.6	4.8	5.6	5.8	6.8	8.8	9.8	10.9	12.9
		Proof load $A_s \times S_p$, N									
M3	5,03	910	1 130	1 510	1 410	1 810	2 710	3 620	3 270	4 100	4 980
M3,5	6,78	1 220	1 580	2 100	1 900	2 440	3 390	4 520	4 410	5 980	6 780
M4	8,78	1 580	1 980	2 630	2 460	3 160	4 390	5 850	5 710	7 740	8 780
M5	14,2	2 550	3 200	4 260	3 980	5 110	7 100	9 460	9 240	12 500	15 500
M6	20,1	3 620	4 500	6 030	5 630	7 240	10 100	13 400	13 100	17 700	19 500
M7	28,9	5 200	6 500	8 670	8 090	10 400	14 500	19 300	18 800	24 300	28 900
M8	36,6	6 590	8 240	11 000	10 200	13 200	18 300	24 400	23 800	30 400	36 500
M10	58	10 400	13 000	17 400	16 200	20 900	29 000	38 700	37 700	48 100	58 000
M12	84,3	15 200	19 000	25 300	23 600	30 400	42 200	56 300	54 900	70 000	84 300
M14	115	20 700	25 900	34 500	32 200	41 400	57 500	76 700 [c]	74 800	95 500	115 000
M16	157	28 300	35 300	47 100	44 000	56 500	78 500	105 000 [c]	102 000	130 000	158 000
M18	192	34 600	43 200	57 600	53 800	69 100	96 000	128 000	-	159 000	192 000
M20	245	44 100	55 100	73 500	68 600	88 200	122 500	163 000	-	203 000	245 000
M22	303	54 500	68 200	90 900	84 800	109 000	151 500	202 000	—	252 000	304 000
M24	353	63 500	79 400	106 000	98 800	127 000	176 500	235 000	—	294 000	353 000
M27	459	82 600	103 000	138 000	128 000	165 000	229 000	306 000	—	383 000	459 000
M30	561	101 000	126 000	168 000	157 000	202 000	280 000	374 000	—	468 000	561 000
M33	694	125 000	156 000	208 000	194 000	250 000	347 000	463 000	—	579 000	694 000
M36	817	147 000	184 000	245 000	229 000	294 000	408 000	544 000	—	681 000	817 000
M39	976	175 000	219 000	292 000	273 000	351 000	487 000	650 000	—	813 000	975 000

[a] Alternative thread pitches and sizes in accordance with ISO 261 may be specified. The tolerances in ISO 965-1 and ISO 965-2.

[b] $A_s = \frac{\pi}{4}(d - 0{,}9382\,P)^2$, see ISO 898-1.

[c] For property classes 10.9 and 12.9, 90 % and 94 % respectively.

Table 8 Minimum ultimate tensile loads – ISO metric fine pitch thread

Thread	Nominal stress area	Property class									
		3.6	4.6	4.8	5.6	5.8	6.8	8.8	9.8	10.9	12.9
		Minimum ultimate tensile load $F_{m,min}$ / N									
M8×1	30.2	12 090	15 090	15 090	18 100	22 400	27 200	31 700	35 700	40 700	47 700
M10×1	34.7	13 900	17 400	17 400	20 800	26 000	31 200	36 400	39 100	45 800	54 600
M12×1,25	51.2	20 500	25 600	25 600	30 700	38 400	46 100	53 800	57 900	67 200	80 600
M12×1,25	59.1	23 700	29 600	29 600	35 500	44 300	53 200	62 100	66 800	77 500	93 000
M13×1,5	68.1	27 300	34 100	34 100	40 900	51 100	61 300	71 500	76 900	89 300	107 100
M14×1,5	78.3	31 300	39 200	39 200	47 000	58 800	70 600	82 300	88 500	102 700	123 200
M16×1,5	104	41 600	52 000	52 000	62 400	78 000	93 600	109 200	117 500	136 300	163 500
M16×1,5	157	62 800	78 500	78 500	94 200	117 800	141 400	165 000	177 500	206 000	247 000
M20×1,5	245	98 000	122 500	122 500	147 000	184 000	220 500	257 000	—	321 500	385 500
M22×1,5	303	121 200	151 500	151 500	181 800	227 300	272 800	318 300	—	398 000	477 500
M24×2	353	141 200	176 500	176 500	211 800	265 000	318 000	371 000	—	463 500	556 000
M27×2	459	183 600	229 500	229 500	275 400	344 300	413 200	482 100	—	602 500	723 000
M30×2	561	224 400	280 500	280 500	336 600	420 800	505 000	589 200	—	736 000	883 200
M33×2	694	277 600	347 000	347 000	416 400	520 500	624 600	728 700	—	910 500	1 092 600
M36×3	817	326 800	408 500	408 500	490 200	612 700	735 200	857 700	—	1 071 500	1 285 800
M39×3	976	390 400	488 000	488 000	585 600	732 000	878 400	1 024 800	—	1 280 000	1 536 000

NOTE 1 The values are rounded.

NOTE 2 For calculation, see B.1.

3047931/2026/0/a Dy.CEE/LOCO/GRC/SER

Table 9 — Proof loads – ISO metric fine pitch thread

Thread	Nominal stress area A_s [a] mm²	Property class									
		3.6	4.6	4.8	5.6	5.8	6.8	8.8	9.8	10.9	12.9
		Proof load $F_p = A_s \times S_p$, N									
M8 × 1	36.6	[illegible]	5 620	12 200	11 000	14 600	17 200	22 700	25 600	32 500	38 000
M10 × 1	58.0	11 600	17 400	20 900	16 100	21 800	25 400	33 400	37 400	43 500	49 700
M10 × 1.25	54.2	11 000	16 200	19 500	15 100	20 300	23 800	31 200	35 000	40 600	46 400
M12 × 1.25	92.1	18 400	27 600	33 200	25 700	34 500	40 500	53 100	59 800	69 100	78 900
M12 × 1.5	88.1	17 600	26 400	31 800	24 700	33 000	38 800	50 900	57 200	66 200	75 600
M14 × 1.5	125	25 000	37 500	45 100	35 000	47 000	55 000	72 000	81 000	94 000	107 000
M16 × 1.5	167	33 400	50 100	60 300	46 800	63 000	73 000	95 000	107 000	125 000	142 000
M16 × 1.5	212	42 400	63 600	76 500	59 400	80 000	93 000	121 000	—	159 000	181 000
M20 × 1.5	272	54 400	81 600	98 200	76 200	102 000	120 000	156 000	—	204 000	232 000
M22 × 1.5	303	60 600	90 900	109 000	84 800	114 000	133 000	173 000	—	227 000	258 000
M24 × 2	351	70 200	105 300	126 000	98 300	132 000	154 000	200 000	—	263 000	299 000
M27 × 2	459	91 800	137 700	165 000	128 600	173 000	201 000	262 000	—	344 000	391 000
M30 × 2	561	112 200	168 300	202 000	157 000	211 000	246 000	320 000	—	420 000	478 000
M33 × 2	694	138 800	208 200	250 000	194 000	261 000	304 000	396 000	—	520 000	591 000
M36 × 3	817	163 400	245 100	294 000	229 000	307 000	358 000	466 000	—	612 000	696 000
M39 × 3	976	195 200	292 800	351 000	273 000	367 000	427 000	556 000	—	731 000	831 000
M39 × 3	1 030	206 000	309 000	370 000	288 000	387 000	450 000	586 000	—	771 000	876 000

[a] Nominal stress area, see 7.2.

[b] Thread diameter, see 7.2.

8 Test methods

8.1 Tensile test for machined test pieces

The following properties shall be checked on machined test pieces by tensile tests in accordance with ISO 6892:

a) tensile strength, R_m;

b) lower yield stress, R_{eL}, or stress at 0,2 % non-proportional elongation, $R_{p0,2}$;

c) percentage elongation after fracture,

$$A = \frac{L_u - L_0}{L_0} \times 100\ \%$$

d) percentage reduction of area after fracture,

$$Z = \frac{S_0 - S_u}{S_0} \times 100\ \%$$

The machined test piece shown in Figure 1 shall be used in the tensile test. If it is not possible to determine the elongation after fracture due to the length of the bolt, the reduction of area after fracture shall be measured provided that L_c shall be $\geq 4d_n$.

When manufacturing the test pieces, the reduction of the shank diameter of the head-headed bolts and screws with $l_s \geq 8d$ may be limited to a maximum of 2 % of the original diameter (about 4 % of the nominal cross sectional area of the test piece).

Products in property classes 4.6, 5.6 and 6.8 (bolt, screw and stud products) shall be tested by tensile test (see 8.2).

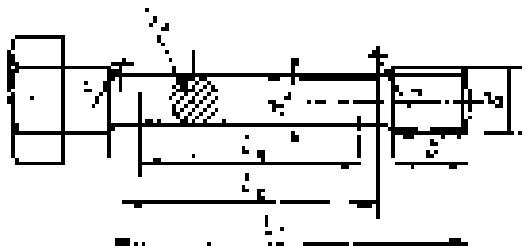

Key

d = nominal diameter

d_0 = diameter of test piece (d_n or minor diameter of thread)

l = threaded length ($l \geq 4d$)

L_0 = $5d_0$ or $5{,}65\sqrt{S_0}$: original gauge length for determination of elongation

L_c = $2d_0$: original gauge length for determination of reduction of area

L_u = length of straight portion ($L_c + d_0$)

L_t = total length of test piece ($L_c + 2r + l$)

L_u = final gauge length (see ISO 6892:1998)

S_0 = cross sectional area before tensile test

S_u = cross sectional area after fracture

r = fillet radius (≥ 4 mm)

Figure 1 — Machined test piece for tensile testing

8.2 Tensile test for full-size bolts, screws and studs

The tensile test shall be carried out on full size bolts in conformity with the tensile test on machined test pieces (see 8.1). It is carried out for the purpose of determining the tensile strength. The calculation of the tensile strength, R_m is based on the minimum stress area A_s (see):

$$A_s = \frac{\pi}{4}\left(\frac{d_2 + d_3}{2}\right)^2$$

where

d_2 = the basic pitch diameter of the thread (see ISO 724);

d_3 = the minor diameter of the thread

$$d_3 = d_1 - \frac{H}{6}$$

in which

d_1 = the basic minor diameter (see ISO 724);

H = the height of the fundamental triangle of the thread (see ISO 68-1)

For testing of full-size bolts, screws and studs the loads given in Tables 6 to 9 shall be applied.

3047931/2026/O/6 Dy.CEE/LOCO/GRC/SER

When carrying out the test, a minimum free threaded length equal to one diameter (1d) shall be subjected to the tensile load. In order to meet the requirements of the test, the fracture shall occur in the shank or the free threaded length of the bolt and not at the junction of the head and the shank.

The speed of testing as determined with a free-running cross-head, shall not exceed 25 mm/min. The grips of the testing machine should be self aligning to avoid side thrust on the test piece.

8.3 Torsional test

For the torsional test see ISO 898-7.

The test applies to bolts and studs with nominal thread diameters of 6 mm and above and to short bolts and screws with nominal thread diameters 3 mm and 4 mm which cannot be subjected to a tensile test.

8.4 Hardness test

For routine inspection, hardness of bolts, screws and studs may be determined on the head, end or shank after removal of any plating or other coating and after suitable preparation of the test place.

For all property classes, if the minimum hardness is exceeded, a check shall be conducted at the mid-radius position one diameter back from the end, at which position the maximum hardness specified shall not be exceeded. In case of doubt, the Vickers hardness will decide for acceptance.

Hardness readings for the surface hardness shall be taken on the ends or hexagon flats, which shall be prepared by minimal grinding or polishing to ensure reproducible readings and therefore the original properties of the surface layer will be unaltered. The Vickers test HV 0,3 shall be the reference for surface hardness testing.

Surface hardness readings taken at HV 0,3 shall be compared with a similar core hardness reading at HV 0,3 in order to make a reliable comparison and determine the relative increase which is permissible up to 30 Vickers points. An increase of more than 30 Vickers points indicates carburization.

For property classes 8.8 to 12.9 the difference between core hardness and surface hardness is decisive for judging of the carburization condition in the surface layer of the bolt, screw or stud.

There may not be a direct relationship between hardness and theoretical tensile strength. Maximum hardness values have been selected for reasons other than theoretical maximum strength consideration (e.g. to avoid embrittlement).

NOTE Careful differentiation should be made between an increase in hardness caused by carburization and that due to heat-treatment or cold working of the surface.

8.4.1 Vickers hardness test

The Vickers hardness test shall be carried out in accordance with ISO 6507-1.

8.4.2 Brinell hardness test

The Brinell hardness test shall be carried out in accordance with ISO 6506.

8.4.3 Rockwell hardness test

The Rockwell hardness test shall be carried out in accordance with ISO 6508.

8.5 Proof load test for full-size bolts and screws

The proof load test consists of two main operations, as follows:

a) application of a specified tensile proof load (see figure 2);

b) measurement of permanent extension l'_{ap}, caused by the proof load.

The proof load, as shown in figures 7 and 8, shall be applied axially in the bolt or screw by a tensile testing machine. The bolt or screw shall be held for 15 s. The length of the unscrewed bolt or screw shall be one diameter (1d).

For a screw threaded to the head, the length of the thread subjected to the load shall be as close as practicable to one diameter (1d).

For measurement of permanent extension, the distance between small punch marks shall be accurately measured on each end, see figure 2. Before and after the application of the proof load, the bolt or screw shall be placed in a bench mounted measuring instrument capable of 0.5 μm resolution. Comparator gauges shall not be used to minimize measurement error.

The length of the gauge length of the bolt or screw to be used when testing shall be the same as that specified within a tolerance of ± 12.5 μm as lower limit or upper-limit error.

The speed of testing as determined with a free running cross head shall not exceed 3 mm/min. The grips of the testing machine shall be of such design that bending does not occur in the test piece.

Some varieties, such as design nuts and threaded aluminium alloy fasteners, may result in apparent elongation of the fastener when the proof load is initially applied. In such cases, the fasteners may be retested using a 0.5 % proof load, and may be considered satisfactory if the length measured is the same as before the initial loading within the 12.5 μm tolerance for measurement error.

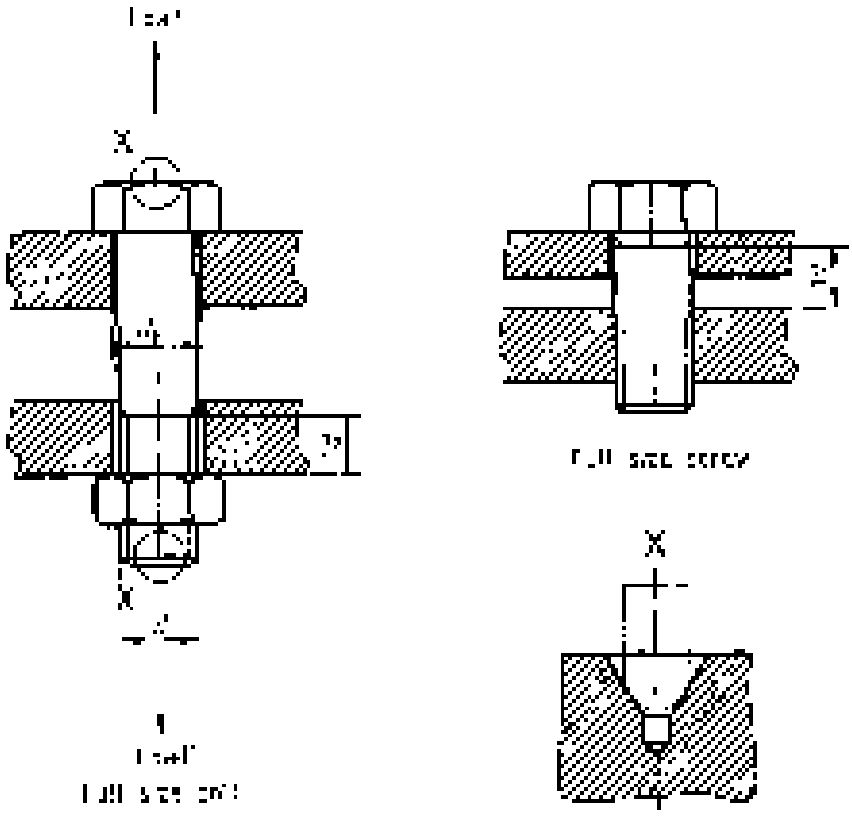

[a] According to ISO 898-1, Annex A (see table 13).

Figure 2 Application of proof load to full-size bolts and screws

3047931/2026/O/6 Dy.CEE/LOCO/GRC/SER

8.6 Test for tensile strength under wedge loading of full-size bolts and screws (not studs)

The wedge loading test shall not apply to countersunk head screws.

The test for strength under wedge loading shall be carried out in a tensile testing device as described in ISO 6892 using a wedge as illustrated in Figure 3.

The minimum distance from the thread runout of the bolt or the nearest surface of the bearing device shall be at least equal to the wedge in accordance with tables 10 and 11 shall be placed under the head of the bolt or screw. A tensile test shall be continued until fracture occurs.

To meet the requirements of this test, the fracture shall occur in the shank or the free threaded length of the bolt, and not between the head and the shank. The bolt or screw shall meet the requirements for minimum tensile strength, using the wedge tensile testing or in a shop equivalent tensile test without a wedge, according to the values given for the relevant property class before the fracture occurs.

Screws threaded to the head shall meet the requirement of the test by a fracture which causes failure or grades in the free length of thread even if the material in contact with the flat area of the head bears a decoration.

For property class C, a minimum wedge angle of 4° should be used according to the formula

$$\alpha_1 = \alpha_{max} - 0{,}2$$

in which

$$\alpha_{max} = \frac{d_{head} - d_{shank}}{2}$$

where

r is the radius of curvature under head;

d_w is the transition diameter;

d_s is the diameter of the unthreaded shank.

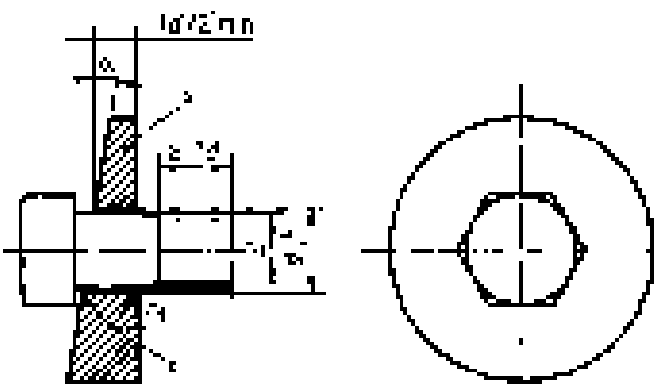

a α_1 according to ISO 273, medium series (see table 10)

b Hardness: 45 HRC min.

c Radius of chamfer: 40°.

Figure 3 — Wedge loading of full-size bolts

Table 10 — Hole diameters for wedge loading tensile test

Dimensions in millimetres

Nominal thread diameter d	d_h	r_1	Nominal thread diameter d	d_h	r_1
3	3,4	0,7	16	17,5	1,0
3,5	3,9	0,7	18	20	1,0
4	4,5	0,7	20	22	1,3
5	5,5	0,7	22	24	1,3
6	6,6	0,7	24	26	1,6
7	7,6	0,8	27	30	1,6
8	9	0,8	30	33	1,6
10	11	0,8	33	36	1,6
12	13,5	0,8	36	39	1,6
14	15,5	1,0	39	42	1,6

NOTE — For square nuts, the corners shall be chamfered to avoid the square nuts.

Table 11 — Wedge dimensions

Nominal diameter of bolt and screw d	Property classes for:			
	bolts with plain shank length $l_s \geq 2d$		screws threaded to the head and bolts with plain shank length $l_s < 2d$	
	3.6, 4.6, 4.8, 5.6, 5.8, 6.8, 8.8, 10.9	9.8, 12.9	3.6, 4.6, 4.8, 5.6, 5.8, 6.8, 8.8, 10.9	9.8, 12.9
mm	α			
$d \leq 20$	10°	6°	6°	4°
$20 < d \leq 39$	6°	4°	4°	4°

For products with head bearing diameters above 1,7 d which fail the wedge tensile test, the head may be machined to 1,7 d and re-tested on the wedge angle specified in Table 11.

Moreover, for products with head bearing diameters above 1,5 d, the 10° wedge angle may be reduced to 6°.

8.7 Impact test for machined test pieces

The impact test shall be carried out in accordance with ISO 83. The test piece shall be 55 mm long, located so as to be the surface of the bolt or screw as possible. The non-notched side of the test piece shall be located near the surface of the bolt. Only bolts of nominal thread diameters $d \geq 16$ mm can be tested.

8.8 Head soundness test for full-size bolts and screws with $d \geq 10$ mm and with lengths too short to permit wedge load testing

The head soundness test shall be carried out as illustrated in figure 4.

3047931/2026/O/o Dy.CEE/LOCO/GRC/SER

When strips of seven threads with a diameter, the head of the bolt or screw shall bend to an angle of 90 - β without showing any sign of cracking at the shank base (fig), when viewed at a magnification of not less than 10 nor more than 20.

When screws are threaded up to the head, the requirements may be considered met even if a crack appears in the first thread, provided that the head does not break.

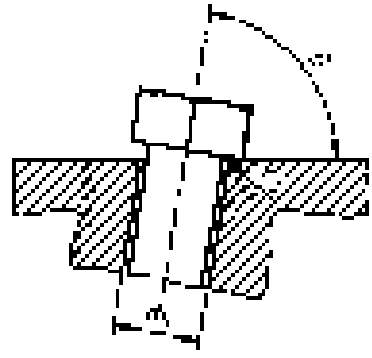

NOTE 1 For d_p and d_3 see table 10.

NOTE 2 The thickness of the test plate should be greater than 2 d.

Figure 4 — Head soundness test

Table 12 — Values of angle β

Property class	3.6	4.6	5.6	4.8	5.8	6.8	8.8	9.8	10.9	12.9
β	90°				60°					

8.9 Decarburization test; evaluation of surface carbon condition

Using the appropriate measuring method (8.9.2.1 or 8.9.2.2 as applicable), a longitudinal section of the thread shall be examined to determine whether the height of the zone of base metal (G) and the depth of the zone with complete decarburization (G1), if any, are within specified limits (see figure 5).

The maximum values for G and the formulae for the minimum values for h are specified in table 3.

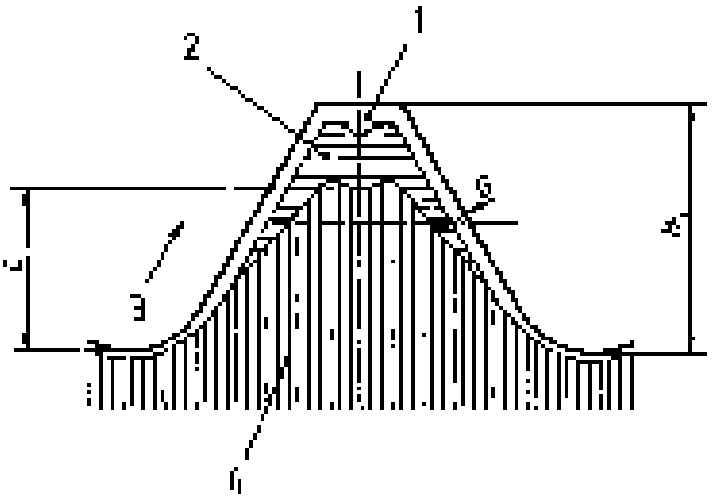

Key

1 Completely decarburized
2 Partially decarburized
3 Perimeter
4 Base metal
h_1 = the external thread height in the minimum material condition

Figure 5 — Zones of decarburization

8.9.1 Definitions

8.9.1.1
base metal hardness
hardness closest to the surface (when traversing from the outside diameter) just before an increase or decrease occurs denoting carburization or decarburization respectively

8.9.1.2
decarburization
generally, loss of carbon in the surface of commercial ferrous materials (steels)

8.9.1.3
partial decarburization
decarburization with loss of carbon sufficient to cause a lighter shade of tempered martensite and significantly lower hardness than that of the adjacent base metal without, however, showing ferrite grains under metallographic examination

8.9.1.4
complete decarburization
decarburization with sufficient carbon loss to allow only clearly defined ferrite grains under metallographic examination

8.9.1.5
carburization
result of increasing surface carbon to a content above that of the base metal

8.9.2 Measurement methods

8.9.2.1 Microscopic method

This method allows the determination of g and c.

The specimen to be used is a longitudinal section taken through the thread axis approximately half a nominal diameter (d/2) from the end of the bolt, screw or stud, after all metal-shaping operations have been performed on the product. The section shall be mounted for grinding and polishing in a clamp or, alternatively, a plastic mount.

After mounting, grind and polish the surface in accordance with good metallographic practice.

Etching in a 3 % nital solution (concentrated nitric acid in ethanol) is usually suitable for show changes in microstructure and hardness decarburization.

Unless otherwise agreed between the interested parties, a × 100 magnification shall be used for examination.

If the microscope is of the type with a ground glass screen, the extent of decarburization can be measured directly with a scale. If an eyepiece is used for measurement, it should be of an appropriate type, containing a cross-hair or a scale.

8.9.2.2 Hardness method (Vickers method for partial decarburization)

The hardness measurement method is applicable only for threads with pitches, $P \geq 1.25$ mm.

The Vickers hardness measurements are made at the three points shown on figure 6. Values for E are given in table 13. The load shall be 300 g.

The hardness determination for point 3 shall be made on the side line of the thread adjacent to the thread on which determinations at points 1 and 2 are made.

The Vickers hardness value at point 2 (HV_2) shall be equal to or greater than that at point 1 (HV_1) minus 30 Vickers units. In this case the height of the non-decarburized zone E shall be at least as specified in table 13.

The Vickers hardness value at point 3 (HV_3) shall be equal to or less than that at point 1 (HV_1) plus 30 Vickers units.

Complete decarburization up to the maximum specified in table 13 cannot be detected by the hardness measurement method.

Dimensions in millimetres

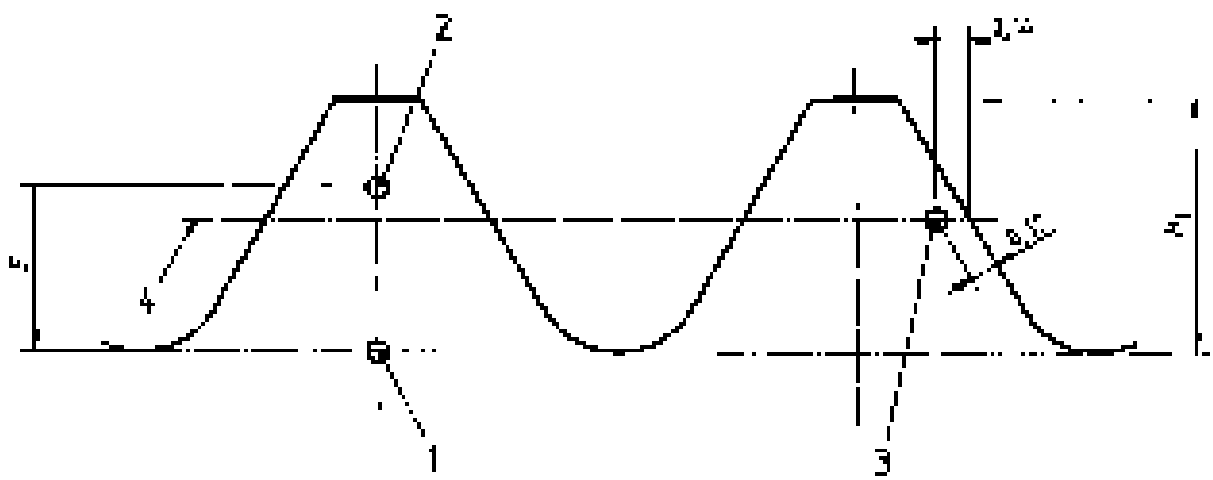

$HV_2 \geq HV_1 - 30$

$HV_3 \leq HV_1 + 30$

Key

1, 2, 3 Measurement points

4 Pitch line

Figure 6 — Hardness measurement for decarburization test

Table 13 — Values for a_w and c

Pitch of the thread P[a] mm		0,5	0,6	0,7	0,8	1	1,25	1,5	1,75	2	2,5	3	3,5	4
	a_w mm	0,307	0,368	0,429	0,491	0,613	0,767	0,920	1,074	1,227	1,534	1,840	2,147	2,454
Property class	4.8	c mm	0,151	0,184	0,215	0,245	0,307	0,384	0,460	0,537	0,614	0,767	0,920	1,227
	10.9		0,215	0,263	0,350	0,327	0,437	0,547	0,656	0,766	0,876	1,093	1,311	1,528
	12.9		0,179	0,219	0,292	0,365	0,456	0,573	0,693	0,807	0,920	1,151	1,380	1,611

[a] For P > 1 mm, measurements are optional only.

[b] Values are in the range for class tolerances 6g, 6h and 6H.

8.10 Retempering test

The mean of three successive hardness readings on a broken screw, taken before and after retempering, shall not differ by more than 20 HV when compared at a part temperature 10 °C below the specified minimum retempering temperature and held for 30 min.

8.11 Surface discontinuity inspection

For the surface discontinuity inspection, see ISO 6157-1 or ISO 6157-3 as appropriate.

In the case of test programme A, the surface discontinuity inspection is applied to wire only before machining.

9 Marking

Mechanical fasteners manufactured to the requirements of this International Standard shall be marked in accordance with the requirements of 9.1 to 9.3.

Only those components in the part of ISO 898 are that parts be marked and described according to the designation system described in clause 5.

Unless otherwise specified in the product standard, the height of embossed markings on the top of the head shall not be included in the overall height dimension.

Marking of slotted and cross recessed screws is not issue.

9.1 Manufacturer's identification marking

A manufacturer's identification mark shall be included during the manufacturing process, on all products which are marked with property classes. Manufacturer's identification marking is also recommended on products which are not marked with property class.

For the purpose of this part of ISO 898 a distributor marking fasteners with his unique identification mark shall be considered a manufacturer.

9.2 Marking symbols for property classes

Marking symbols are shown in table 14.

3047931/2026/O/o Dy.CEE/LOCO/GRC/SER

Table 14 — Marking symbols

Property class	3.6	4.6	4.8	5.6	5.8	6.8	8.8	9.8	10.9	12.9
Marking symbol [a] [b]	3.6	4.6	4.8	5.6	5.8	6.8	8.8	9.8	10.9	12.9

[a] The full stop in the marking symbol may be omitted.

[b] Steel of low carbon or medium carbon content is used for property class 10.9 (see clause 7).

In the case of small screws in which the shape of the head does not allow the marking as given in table 14, the clock face marking symbols as given in table 15 may be used.

Table 15 — Clock-face system for marking bolts and screws

	Property class				
	3.6	4.6	4.8	5.6	5.8
Marking symbols	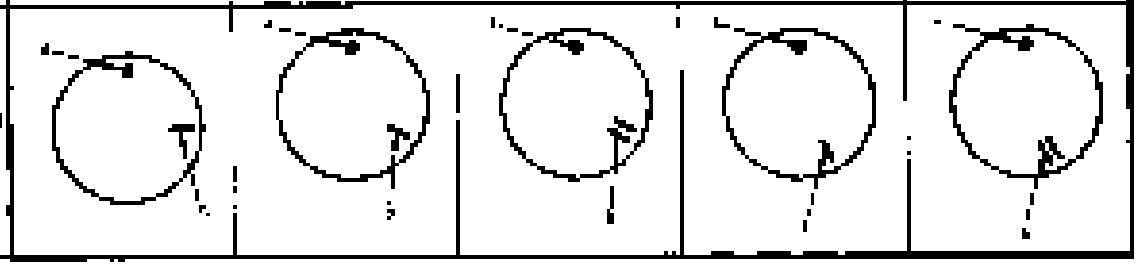				

	Property class				
	6.8	8.8	9.8	10.9	10.9	12.9
Marking symbols	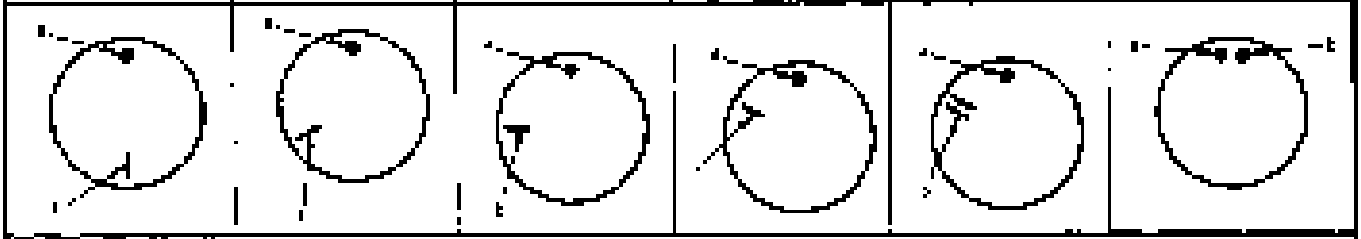				

[a] The low carbon steel property class (minimum tensile strength not specified) is marked either by the manufacturer's identification mark or by a point.

[b] The property class is marked by a dash in a double clock face for the case of 10.9 and in the case of 12.9 by a point.

9.2 Identification

9.2.1 Hexagon and hexalobular head bolts and screws

Hexagon and hexalobular head bolts and screws (including products with flange) shall be marked with the manufacturer's identification mark and with the marking symbol of the property class given in table 14.

The marking is obligatory for all property classes, preferably on the top of the head by indenting or embossing or on the side of the head by incising (see figure 7). In the case of bolts or screws with flange, marking shall be on the flange where the manufacturing process does not allow marking on the top of the head.

Marking is required for hexagon and hexalobular head bolts and screws with nominal diameter $d \geq 5$ mm.

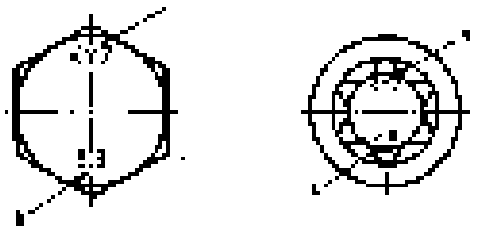

1 Manufacturer's identification mark.

2 Property class.

Figure 7 — Examples of marking on hexagon and hexalobular head bolts and screws

9.3.2 Hexagon and hexalobular socket head cap screws

Hexagon and hexalobular socket head cap screws shall be marked with the manufacturer's identification mark and with the marking symbol of the property class given in table 14.

The marking is obligatory for property classes 8.8 and higher, preferably on the side of the head by indenting or on the top of the head by indenting or embossing (see figure 8).

Marking is required for hexagon and hexalobular socket head cap screws with nominal diameters $d \geq 5$ mm.

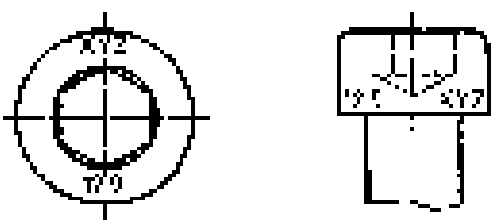

Figure 8 — Examples of marking on hexagon socket head cap screws

9.3.3 Cup head square neck bolts

Cup head square neck bolts with property classes 9.6 and higher shall be marked with the manufacturer's identification mark and with the marking symbol of the property class as given in table 14.

The marking is mandatory for bolts with nominal diameters $d \geq 5$ mm. It shall be on the head by indenting or embossing (see figure 9).

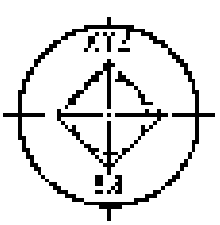

Figure 9 — Example of marking cup head square neck bolts

9.3.4 Studs

Studs with nominal thread diameters $d \geq 5$ mm, of property class 5.8 and property classes 8.8 and higher shall be marked by rolling with the marking symbol of the property class as given in Table 14 and the manufacturer's identification mark on the unthreaded part of the stud (see Figure 10).

If marking on the unthreaded part is not possible, marking of property class only on the nut and of the stud is allowed, see Figure 10. For studs with nut (see Figure 8), the marking shall be on the nut and with manufacturer's identification marking only if it is possible.

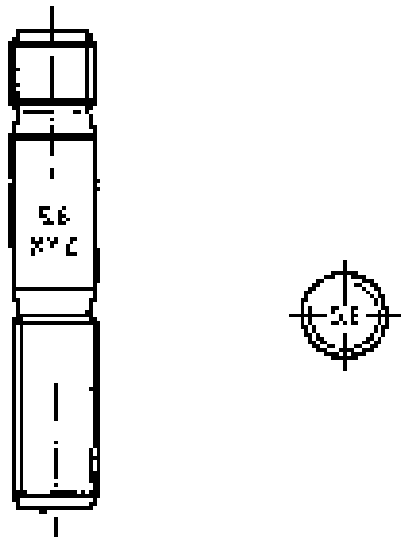

Figure 10 — Marking of studs

The symbols in Table 16 are permissible as an alternative identification of property classes.

Table 16 — Alternative marking symbols for studs

Property class	5.8	8.8	9.8	10.9	12.9
Marking symbol	—	○	+	□	△

9.3.5 Other types of bolts and screws

If agreed between the interested parties, the same marking systems as described in the previous paragraphs of clause 9 shall be used for other types of bolts and screws and for special products.

9.4 Marking of bolts and screws with left-hand thread

Bolts and screws with a left hand thread shall be marked with the symbol shown in Figure 11, either on the top of the head or on the point.

Marking is required for bolts and screws with nominal thread diameters $d \geq 5$ mm.

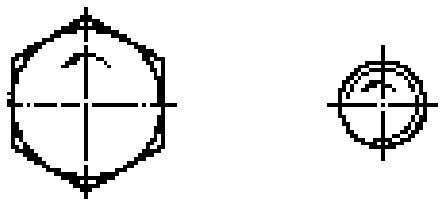

Figure 11 — Left-hand thread marking

Alternative marking for left-hand thread as shown in figure 12 may be used for metric bolts and screws.

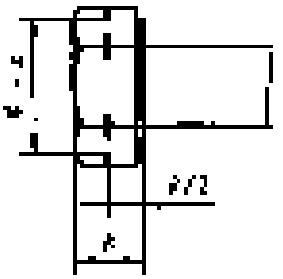

Key

a = the width across flats

k = the height of the head

Figure 12 — Alternative left-hand thread marking

9.5 Alternative marking

Alternative or additional permitted marking systems in 5.2 to 5.4 shall be left to the choice of the manufacturer.

9.6 Marking of packages

Marking with manufacturer's identification and property class is mandatory on all packages for all sizes.

Annex A
(Informative)

Lower yield stress or stress at 0,2 % non-proportional elongation at elevated temperature

The mechanical properties of bolts, screws and studs will vary in a variety of ways with increasing temperature. Table A.1, which is for guidance only, is an approximate representation of the reduction in lower yield stress or 0,2 % non-proportional elongation which may be experienced at a variety of elevated temperatures. These data shall not be used as a requirement.

Table A.1 — Lower yield stress or stress at 0,2 % non-proportional elongation at elevated temperature

Property class	Temperature °C				
	+ 20	+ 100	+ 200	+ 250	+ 300
	Lower yield stress, R_{eL} or stress at 0,2 % non-proportional elongation $R_{p\,0,2}$ N/mm²				
5.6	300	270	230	215	195
8.8	640	630	540	510	480
10.9	940	870	730	745	705
10.9	940	—	—	—	—
12.9	1 100	1 020	820	870	825

Continuous operating at elevated service temperature may result in significant stress relaxation. Typically 100 h service at 300 °C will result in a permanent reduction in excess of 25 % of the initial clamping load in the bolt due to decrease in yield stress.

BIS is a statutory institution established under the Bureau of Indian Standards Act, 1986 to promote harmonious development of the activities of standardization, marking and quality certification of goods and attending to connected matters in the country.

Copyright

BIS has the copyright in all its publications. No part of these publications may be reproduced in any form without the prior permission in writing of BIS. This does not preclude the free use, in the course of implementing the standard, of necessary details, such as symbols and sizes, type or grade designations. Enquiries relating to copyright be addressed to the Director (Publications), BIS.

Review of Indian Standards

Amendments are issued to standards as the need arises on the basis of comments. Standards are also reviewed periodically; a standard along with amendments is reaffirmed when such review indicates that no changes are needed; if the review indicates that changes are needed, it is taken up for revision. Users of Indian Standards should ascertain that they are in possession of the latest amendments or edition by referring to the latest issue of 'BIS Catalogue' and 'Standards : Monthly Additions'.

This Indian Standard has been developed from Doc. No. BP 25 : C 1 : 8).

Amendments Issued Since Publication

Amend No.	Date of Issue	Text Affected

BUREAU OF INDIAN STANDARDS

Headquarters:

Manak Bhavan, 9 Bahadur Shah Zafar Marg, New Delhi 110 002
Telephones: 323 01 31, 323 33 75, 323 94 02

Telegrams: Manaksanstha
(Common to all offices)

Regional Offices:	Telephone
Central : Manak Bhavan, 9 Bahadur Shah Zafar Marg NEW DELHI 110 002	323 76 17 323 3841
Eastern : 1/14 C.I.T. Scheme VII M, V.I.P. Road, Kankurgachi KOLKATA 700 054	337 84 99, 337 85 61 337 86 26, 337 91 20
Northern : SCO 335-336, Sector 34-A, CHANDIGARH 160 022	60 38 43 60 20 25
Southern : C.I.T. Campus, IV Cross Road, CHENNAI 600 113	254 12 16, 254 14 42 254 25 19, 254 13 15
Western : Manakalaya, E9 MIDC, Marol, Andheri (East) MUMBAI 400 093	832 92 95, 832 78 58 832 78 91, 832 78 92

Branches: AHMADABAD. BANGALORE. BHOPAL. BHUBANESHWAR. COIMBATORE. FARIDABAD. GHAZIABAD. GUWAHATI. HYDERABAD. JAIPUR. KANPUR. LUCKNOW. NAGPUR. PALAKADH. PATNA. PUNE. RAJKOT. THIRUVANANTHAPURAM.

Printed in India by New India Printing Press, Khurja

3047931/2026/O/o Dy.CEE/LOCO/GRC/SER

इंटरनेट मानक

Disclosure to Promote the Right To Information

Whereas the Parliament of India has set out to provide a practical regime of right to information for citizens to secure access to information under the control of public authorities, in order to promote transparency and accountability in the working of every public authority, and whereas the attached publication of the Bureau of Indian Standards is of particular interest to the public, particularly disadvantaged communities and those engaged in the pursuit of education and knowledge, the attached public safety standard is made available to promote the timely dissemination of this information in an accurate manner to the public.

"जानने का अधिकार, जीने का अधिकार"
Mazdoor Kisan Shakti Sangathan
"The Right to Information, The Right to Live"

"पुराने को छोड नये के तरफ"
Jawaharlal Nehru
"Step Out From the Old to the New"

IS 2016 (1967): Plain Washers [PGD 31: Bolts, Nuts and Fasteners Accessories]

"ज्ञान से एक नये भारत का निर्माण"
Satyanarayan Gangaram Pitroda
"Invent a New India Using Knowledge"

"ज्ञान एक ऐसा खजाना है जो कभी चुराया नहीं जा सकता है"
Bhartṛhari—Nītiśatakam
"Knowledge is such a treasure which cannot be stolen"

BLANK PAGE

BRUTUM FULMEN

PROTECTED BY COPYRIGHT

3047931/2026/O/o Dy.CEE/LOCO/GRC/SER

IS : 2016 - 1967
(Reaffirmed 2001)

Indian Standard
SPECIFICATION FOR PLAIN WASHERS
(First Revision)

Thirteenth Reprint SEPTEMBER 2001
(Incorporating amendment No. 1)

UDC 621.882.4

© Copyright 1972
BUREAU OF INDIAN STANDARDS
MANAK BHAVAN, 9 BAHADUR SHAH ZAFAR MARG
NEW DELHI 110002

Gr 3 February 1968

3047931/2026/O/o Dy.CEE/LOCO/GRC/SER

IS : 2016 - 1967

Indian Standard

SPECIFICATION FOR PLAIN WASHERS

(First Revision)

Screw Threads and Fasteners Sectional Committee, SDC 27

Chairman	Representing
Shri T. G. Pahr	Research Designs & Standards Organisation (Ministry of Railways)
Members	
Shri G. M. Mavar (Alternate to Shri T. G. Pahr)	
Col. J. D. Ashmore	Ministry of Defence (DGI)
Shri J. G. Lucas (Alternate)	
Shri R. M. Amin	Machine Tool Prototype Factory, Directorate General of Ordnance Factories, Ambernath
Maj D. P. S. Rana	Directorate of Inspection (Weights), Ministry of Defence (DGI)
Shri D. R. Mayer (Alternate)	
Shri R. S. Bhowmik	Tata Engineering & Locomotive Co Ltd, Jamshedpur
Shri B. N. Bhatia	Heavy Electricals (India) Ltd, Bhopal
Shri R. S. Jain	Hindustan Machine Tools Ltd, Bangalore
Shri M. Sreenivasan (Alternate)	
Director, Directorate of Standardisation	Indian Navy
Lt-Cdr H. K. Thakur	Ministry of Defence (R & D)
Dr V. K. Gaonkar	Hindustan Aeronautics Ltd, Bangalore
Shri B. B. Balavantachaman (Alternate)	
Shri B. Gangadhar	Indian Telephone Industries Ltd, Bangalore
Shri D. K. Chatterjee (Alternate)	
Shri N. V. Hanumanna	Bhikaiaji Brothers Ltd, Bhikaiaji
Shri B. J. Karia	All India Manufacturers' Organisation, Bombay
Shri V. Kumar	Guest, Keen, Williams Ltd, Calcutta
Shri Dilip Bose (Alternate)	
Shri M. N. Rao	Bharat Electronics Ltd, Bangalore
Shri R. Ramaiya (Alternate)	
Dr S. P. Sukhatme	The Institution of Engineers (India), Calcutta
Shri D. Mukherjee	Office of the Development Commissioner for Small Scale Industries (Ministry of Industrial Development & Company Affairs)
Prof G. B. Sharma (Alternate)	

(Continued on page 2)

BUREAU OF INDIAN STANDARDS
MANAK BHAVAN, 9 BAHADUR SHAH ZAFAR MARG
NEW DELHI 110002

(Continued from page 1)

Members	Representing
Shri S. D. Kapadia	National Iron & Steel Co., Calcutta
Shri R. N. Mathur	Directorate General of Technical Development (Ministry of Industrial Development & Company Affairs)
Shri R. S. Mathur Shri S. K. Mathur (Alternate)	Engineering Association of India, Calcutta
Shri P. S. [illegible]	Directorate of Technical Development & Production (Ministry of Defence)
Shri K. S. [illegible]	Jyoti Ltd, Baroda
Shri [illegible] Shri P. S. [illegible] (Alternate)	National Physical Laboratory (CSIR), New Delhi
Shri S. Ramakrishnan	Directorate General of Civil Aviation (Ministry of Tourism & Civil Aviation) Shri [illegible] (Alternate)
Shri P. R. S. [illegible] Shri J. C. Bhattacharya (Alternate)	The Cycle Manufacturers' Association of India, Calcutta
Shri [illegible] Shri H. F. Wadia (Alternate)	New Government Electric Factory, Bangalore
Shri S. S. Thakore	Directorate General of Supplies & Disposals (Ministry of Works, Housing & Supply)
Shri T. V. Viswanath	Indian Railways' Association of India, Calcutta
Shri K. V. [illegible], Director (Mech Engg)	Director General, ISI (Ex-officio Member)

Secretary

Shri S. Chandrasekaran

Deputy Director (Mech Engg), ISI

Bolts and Nuts for General Engineering Purposes Subcommittee, LDC 27 : 5

Convener

Shri R. S. Jain	Hindustan Machine Tools Ltd, Bangalore

Members

Shri K. Ramachandran (Alternate to Shri R. S. Jain)	
Shri A. K. Sharma	Bharat Electronics (India) Ltd, Bhopal
Lt-Col. R. K. Gupta	Ministry of Defence (R & D)
Shri D. S. Lodha	Research Designs & Standards Organisation (Ministry of Railways)
Shri V. Kapur Shri [illegible] (Alternate)	Guest, Keen, Williams Ltd, Calcutta
Shri Md. Md. Mahmood Shri M. M. Mathew (Alternate)	Engineering Association of India, Calcutta
Shri R. S. Thakur Shri J. P. Kanchwala (Alternate)	Forbes Forbes Campbell & Co. Ltd, Bombay

3047931/2026/O/o Dy.CEE/LOCO/GRC/SER

AMENDMENT NO. 2 MARCH 1979

TO

IS : 2016-1967 SPECIFICATION FOR PLAIN WASHERS

(*First Revision*)

Alterations

(*Page 4, clause 4.2 ; see also Amendment No. 1*) — Substitute the following for the existing clause:

'4.2 The other dimensional requirements for punched washers covered in Tables 2 and 3 shall comply with those specified for ordinary washers according to IS : 3369-1975*.'

(*Page 4, foot-note with '*' mark*) — Substitute the following for the existing foot-note:

'*General requirements for plain washers and lock washers (*first revision*).'

(*Page 5, clauses 6 and 6.1*) — Substitute the following for the existing clauses:

'6. GENERAL REQUIREMENTS

6.1 In respect of requirements not covered in this standard, machined and punched washers shall comply with requirements specified for precision and ordinary washers, respectively, according to IS : 3369-1975*.'

Additions

(*Page 5, foot-note*) — Add the following new foot-note as the end:

'*General requirements for plain washers and lock washers (*first revision*).'

[BDC 27]

Printed at Tata Press, Printing Press, Delhi

3047931/2026/O/o Dy.CEE/LOCO/GRC/SER

AMENDMENT NO. 3 NOVEMBER 1980

TO

IS:2016-1967 SPECIFICATION FOR PLAIN WASHERS

(First Revision)

Alterations

(Page 8, Table 1, Figure) - Substitute the following for the existing figure:

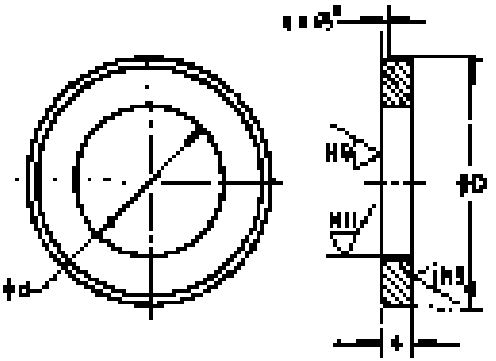

(Page 10, Table 2, Figure) - Substitute the following for the existing figure:

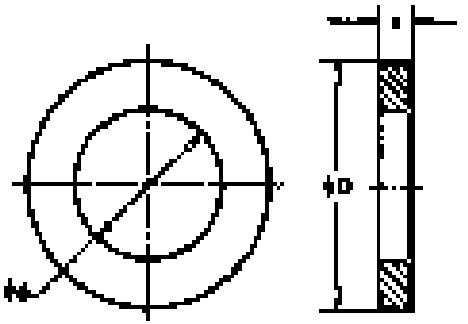

Addendum

{Page 4, clause 4.2} - Add the following new clause after 4.2:

"4.3 Machined and punched washers shall conform to the concentricity tolerance, permissible deviations for parallelism and flatness as specified in IS:5369-1975 'General requirements for plain washers and lock washers (First revision)'."

{MDC 27}

Printed at Navin Publishing Press, Delhi

AMENDMENT NO. 4 OCTOBER 1982

TO

IS:2016-1967 SPECIFICATION FOR PLAIN WASHERS

(First Revision)

Alterations

(Page 4, clause 4.2 (see also Amendment No. 2)) - Substitute the following for the existing clause:

"4.2 The tolerance on inner diameter, d outer diameter, D and thickness s for machined and punched washers shall conform to precision and ordinary washers respectively as specified in IS:5369-1975 'General Requirements for Plain Washers and Lock Washers'."

(Page 4, clause 4.3 (see also Amendment No. 3)) - Substitute the following for the existing clause:

'4.3 In respect of concentricity tolerance, permissible deviations for parallelism and flatness, the machined and punched washers shall conform to precision and ordinary washers respectively as specified in IS:5369-1975.'

(Pages 6 to 8, Table 1):

a) First column heading - Delete 'Hip'.

b) Columns under 'D' and 'e' - Delete.

c) Foot-note with '4' mark - Delete.

(Ref: 27)

Printed at Simla Printing Press, Delhi

3047931/2026/O/o Dy.CEE/LOCO/GRC/SER

Indian Standard

SPECIFICATION FOR PLAIN WASHERS

(First Revision)

0. FOREWORD

0.1 This Indian Standard (First Revision) was adopted by the Indian Standards Institution on 9 November 1967, after the draft finalized by the Screw Threads and Fasteners Sectional Committee had been approved by the Mechanical Engineering Division Council.

0.2 This standard was originally issued in 1962. This revision incorporates the decision taken by the ISO/TC 2 Bolts, Nuts and Accessories.

0.3 This standard is based on:

ISO/R 260 Recommendation No. 260 Washers for hexagon bolts and nuts, metric series. International Organisation for Standardisation.

Doc. ISO/TC 2 (Secretariat-134) 302 First draft proposal for washers for hexagon bolts and nuts — metric series — 42 up to and including 150 mm thread diameter. International Organisation for Standardisation.

Doc. ISO/TC 2 (Secretariat-194) 326 First draft proposal for washers for cheese head screws — metric series — 1 up to and including 20 mm thread diameter. International Organisation for Standardisation.

DIN 125-1965 Scheiben für Sechskantschrauben und Muttern (Washers for hexagon bolts and nuts). Deutscher Normenausschuss.

0.4 For the purpose of deciding whether a particular requirement of this standard is complied with, the final value, observed or calculated, expressing the result of a test, shall be rounded off in accordance with IS : 2-1960*. The number of significant places retained in the rounded off value should be the same as that of the specified value in this standard.

---

*Rules for rounding off numerical values (revised).

3047931/2026/O/o Dy.CEE/LOCO/GRC/SER

1. SCOPE

1.1 This standard lays down the requirements for plain washers of the following types:

a) Machined washers, for precision and semi-precision grade of general purpose bolts and screws, in the diameter range 1·7 to 130 mm;

b) Punched washers, type A, for black grade general purpose bolts and screws, in the diameter range 1·0 to 32 mm; and

c) Punched washers, type B, for slotted head screws in the diameter range 1·8 to 22 mm.

2. MANUFACTURE

2.1 Material — Washers shall be made of steel, brass, aluminium or any other suitable metal specified by the purchaser.

2.2 Workmanship — The washers shall be free from cracks burrs, pits and other defects. The holes shall be reasonably concentric with the outer periphery. All sharp edges shall be removed.

3. DESIGNATION

3.1 A washer shall be designated by name, type, size, number of this standard and material.

Example

a) A machined washer of size 10·5 mm made of brass shall be designated as:

Machined Washer 10·5 IS : 2016-Brass

b) A punched washer, Type B of size 14 mm made of brass shall be designated as:

Punched Washer B14 IS : 2016-Brass

4. DIMENSIONS

4.1 The dimensions for machined washers, punched washers, types A and B, shall be as given in Tables 1, 2 and 3 respectively (see F 6 to 11). These tables also give the size of bolt or screw for which the washers are suitable.

4.2 The other dimensional requirements for punched washers covered in Tables 2 and 3 shall be as given in IS : 3369-1966*.

*Dimensional requirements for plain washers and lock washers.

5. FINISH

5.1 The plain washers shall be supplied in natural finish unless otherwise specified by the purchaser. At the request of the purchaser, washers may be phosphate coated, nickel plated, tinned, galvanised, copper plated, cadmium plated, etc. The properties of the plain washers shall not, however, be impaired by the protective coating specified by the purchaser.

6. PACKING

6.1 The plain washers may be packed as recommended below:

Sizes up to 13·5 mm	In boxes of 1 000 pieces
Sizes from 13 to 19 mm	In boxes of 500 pieces
Sizes 21 mm and above	In boxes of 100 pieces.

The plain washers may also be packed in quantities of 2 kg and 10 kg.

7. MARKING

7.1 The packages containing washers shall be marked with the size and manufacturer's name or trade-mark.

7.2 ISI Certification Marking

The product may also be marked with Standard Mark.

7.2.1 The use of the Standard Mark is governed by the provisions of Bureau of Indian Standards Act, 1986 and the Rules and Regulations made thereunder. The details of conditions under which the licence for the use of Standard Mark may be granted to manufacturers or producers may be obtained from the Bureau of Indian Standards.

TABLE 1 DIMENSIONS FOR MACHINED WASHERS

(Clause 4.1)

All dimensions in millimetres.

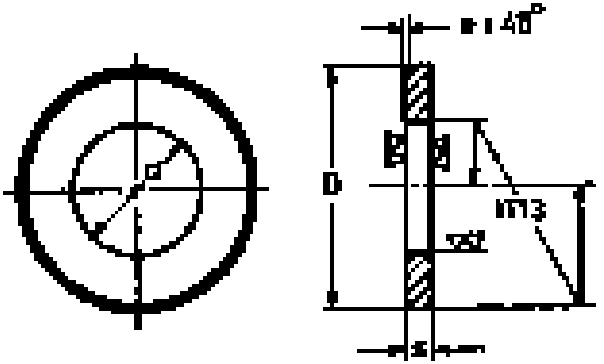

Size d (M12)*	D		s		r	For Bolt or Screw Size
	Basic	Tol	Basic	Tol		
1·7	4	+0 −0·3	0·3	±0·1	0·1	M1·6
(2)	5	+0 −0·3	0·3	±0·1	0·1	[M1·6]
2·5	5	+0 −0·3	0·3	±0·1	0·1	M2
[2·6]	6	+0 −0·3	0·5	±0·1	0·2	[M2·2]
2·7	6·5	+0 −0·5	0·5	±0·1	0·2	M2·5
3·4	7	+0 −0·4	0·5	±0·1	0·2	M3
[3·7]	8	+0 −0·3	0·8	±0·1	0·3	[M3·5]
4·3	9	+0 −0·3	0·8	±0·1	0·3	M4
[5·0]	10	+0 −0·5	1·0	±0·2	0·4	[M5·0]

(Continued)

Note — Sizes in brackets are of second preference.

*For IS : 218 - 1963 ' Recommendations for limits and fits for engineering [metal] '.

TABLE 1 DIMENSIONS FOR SCHEDULED WASHERS — Contd

Size of Bolt*	D		d		r Max	Free Hole in Washer Max
	Basic	Tol	Basic	Tol		
5.5	10	+0 −0.5	1.0	+0.1	0.4	5.8
6.4	12.5	+0 −0.6	1.6	+0.3	0.4	6.8
(7.4)	14	+0 −0.6	1.6	+0.3	0.6	(8.0)
8.4	17	+0 −0.6	1.6	+0.3	0.6	9.0
10.5	21	+0 −0.5	2	+0.2	0.6	11.0
13	24	+0 −0.5	2.5	+0.2	0.6	14.0
(15)	28	+0 −0.5	2.5	+0.3	0.8	(16.0)
17	30	+0 −0.5	3	+0.3	0.6	18.0
(19)	34	+0 −0.6	3	+0.3	1.0	(20.0)
21	37	+0 −0.6	3	+0.3	1.0	22.0
(23)	39	+0 −0.6	3	+0.3	1.0	24.0
25	44	+0 −0.6	4	+0.3	1.0	26.0
(28)	50	+0 −0.6	4	+0.3	1.0	(30.0)
31	56	+0 −1.0	4	+0.3	1.0	34.0

(Continued)

Note — Sizes in brackets are of second preference.

*See IS : 1363-1967 'Recommendations for hexagonal fits for engineering (metric series)'.

TABLE 1 DIMENSIONS FOR MACHINED WASHERS — Contd

Size of Washer	D			J			Approx Mass	Tons Equal to Bearing Area
	Basic	Tol		Basic	Tol			
(30)	40	+0 −1·0		6	±0·6		1·0	(0·000)
32	45	+0 −1·0		6	±0·6		1·5	0·000
(33)	32	+0 −1·0		6	±0·6		1·5	(0·000)
35	38	+0 −1·0		7	±1·0		1·5	0·002
(36)	36	+0 −1·0		7	±1·0		1·5	(0·003)
38	38	+0 −1·0		8	±1·0		1·5	0·003
(39)	38	+0 −1·0		8	±1·0		1·5	(0·004)
40	100	+0 −1·5		9	±1·0		1·5	0·005
(42)	110	+0 −1·5		9	±1·0		2·0	(0·006)
44	115	+0 −1·5		9	±1·0		2·0	0·006
(45)	120	+0 −1·5		10	±1·0		2·0	(0·008)
48	125	+0 −1·5		10	±1·0		2·0	0·012
(50)	135	+0 −1·5		10	±1·0		2·0	(0·016)

(Continued)

Dimensions — Where in brackets are of second preference.

Cos IS : 1917 - 1967 Nomenclature for locks and fits for engineering [revised].

TABLE 1 DIMENSIONS FOR MACHINED WASHERS — Contd

Size of Bolt or Screw*	D		d		T	Face Diameter for Spring Washer
	Basic	Tol.	Basic	Tol.	Min	
52	140	+0 −1·8	17	±1·2	2·5	5400
(55)	145	+0 −1·8	22	±1·2	3·0	(6000)
56	148	+0 −1·8	22	±1·2	3·0	6250
(58)	155	+0 −1·8	22	±1·2	3·0	(6650)
60	155	+0 −1·8	22	±1·2	3·0	7000
(62)	162	+0 −1·8	24	±1·2	3·0	(7750)
64	165	+0 −2	24	±1·2	3·0	8500
(65)	170	+0 −2	24	±1·2	3·0	(8750)
(68)	180	+0 −2	26	±1·2	3·0	(9500)
70	190	+0 −3	26	±1·2	3·0	10000
(72)	200	+0 −3	26	±1·2	3·0	(10750)
76	210	+0 −3	26	±1·2	3·0	12000
(78)	220	+0 −3	26	±1·2	3·0	13500
80	230	+0 −3	26	±1·2	3·0	15000
(82)	240	+0 −3	26	±1·5	4·0	16750
(85)	250	+0 −3	26	±1·5	4·0	(18750)

NOTE — Sizes in brackets are of second preference.

*See IS : 1363 - 1963 'Hexagon head bolts, screws and nuts for engineering (metric)'.

TABLE 2 DIMENSIONS FOR PUNCHED WASHERS, TYPE A, FOR HEXAGONAL BOLTS AND SCREWS

(Clauses 4.1 and 4.2)

All dimensions in millimetres.

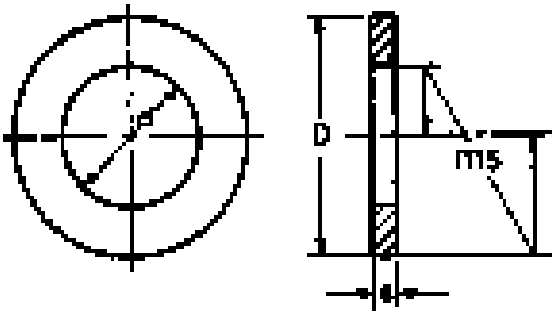

Size d	D Max	s Nom	For Bolt or Screw Size
1·8	4	0·4	M1·6
(2·1)	5	0·4	(M1·8)
2·4	5	0·4	M2
(2·6)	6	0·5	(M2·2)
2·9	6·5	0·5	M2·5
3·4	7	0·5	M3
(3·9)	8	0·8	(M3·5)
4·5	9	0·8	M4
(5·0)	10	1	(M4·5)
5·5	10	1	M5
6·6	12·5	1·6	M6
(7·6)	14	1·6	(M7)
9	17	1·6	M8
11	21	2	M10
14	24	2·5	M12
(16)	28	2·5	(M14)
18	30	3·15	M16
(20)	34	3·15	(M18)
22	37	3·15	M20
(24)	39	3·15	(M22)
26	44	4	M24
(30)	50	4	(M27)
33	56	4	M30
(36)	60	5	(M33)
39	66	5	M36
(42)	72	6	(M39)
45	78	6	M42
(48)	85	8	(M45)
52	92	8	M48

NOTE — Sizes in brackets are of second preference.

TABLE 8 DIMENSIONS FOR PLUMBED WASHERS, TYPE B, FOR BOLTS AND CHEESE HEAD SCREWS

(Clause 4.3 and 4.2)

All dimensions in millimetres.

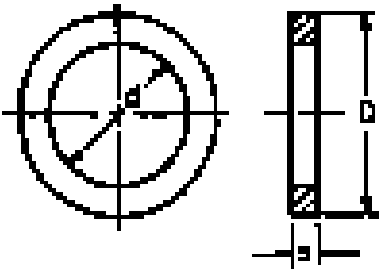

Size d	D Min	t Min	For Screw Size
1.6 (2.1) 2.5	3.5 3.5 4.5	0.4 0.3 0.4	M1.6 (M1.8) M2
(2.6) 3.0 3.5	4.5 5.0 5.0	0.5 0.5 0.5	(M2.5) M3 M3.5
(4.0) 4.5 (5.0)	7.0 8.0 9.0	0.5 0.8 0.8	(M4) M4 (M4.5)
5.5 6.5 (7.0)	9.5 11 13	1.0 1.0 1.5	M5 M6 (M7)
8 10 12	15 18 20	1.5 2 2.5	M8 M10 M12
(14) 16 (20)	24 27 30	2.5 2.5 2.5	(M14) M16 (M18)
22	33	2.5	M20

NOTE — Sizes in brackets are of second preference.

3047931/2026/O/o Dy.CEE/LOCO/GRC/SER

BUREAU OF INDIAN STANDARDS

Headquarters:
Manak Bhavan, 9 Bahadur Shah Zafar Marg, NEW DELHI 110002
Telephone: [illegible] Fax: [illegible]
E-Mail: [illegible] Website: http://www.bis.org.in

Central Laboratory:	Telephone
Plot No. [illegible] Sector 67, Sahibabad Industrial Area, Sahibabad 201010	[illegible]
Regional Offices:	
Central: Manak Bhavan, 9 Bahadur Shah Zafar Marg, NEW DELHI 110002	[illegible]
Eastern: 1/14 CIT Scheme VII, V. I. P. Road, Kankurgachi, KOLKATA 700054	[illegible]
Northern: SCO 337-338, Sector 34-A, CHANDIGARH 160022	[illegible]
Southern: C.I.T. Campus, IV Cross Road, CHENNAI 600113	[illegible]
Western: Manakalaya, E9, MIDC, Behind Marol Telephone Exchange, Andheri (East), MUMBAI 400093	[illegible]
Branch Offices:	
'Pushpak', Plot Commercial Complex, Khanpur, AHMEDABAD 380001	[illegible]
Peenya Industrial Area, 1st Stage, Tumkur Road, BANGALORE 560058	[illegible]
Commercial Office Cum Exhibition Complex, Opp. Dushera Maidan, Sector 17-E, Arera Colony, Bhopal Madhya Pradesh, BHOPAL 462016	[illegible]
62/63, Unit III, Janpath, Bhoi V., BHUBANESHWAR 751007	[illegible]
5th Floor, Kalpana Towers, 47/18, Desai Subramanian Road, COIMBATORE 641018	[illegible]
Plot No. 236, Western Extn. Area, Road No. 1, PATNA 800001	[illegible]
Sector Complex, 116 G.T. Road, GHAZIABAD 201001	[illegible]
SCO Plot No. 126, P.O. Bhatia Road, 5th Building, Aparna Sinha Tower, GURGAON 122001	[illegible]
1/1 Kaviraj Lane, Ashoka Marg, Hanumanji Bazar Road, HYDERABAD 500001	[illegible]
B-52, Chitranjan Marg, C-Scheme, JAIPUR 302001	[illegible]
[illegible]	[illegible]
Sahi Bhawan, 2nd Floor, Behind Lovely Cinema, Near Kalawa Road, JAIPUR 302001	[illegible]
H.T. Building, Second Floor, Bhanpur Nagar, NAGPUR [illegible]	[illegible]
Kishkar Bhawan, 2nd Floor, Kachari Road, KALAGAMBH 174101	[illegible]
Patliputra Industrial Estate, PATNA 800013	[illegible]
Raj Plaza, Plot No. [illegible], NO. [illegible], Guwahati, PIN [illegible]	[illegible]
Sahajanand Tower, 3rd Floor, Shivranjani Circle, CD Tank Road, RAJKOT 360001	[illegible]
T.S. No. 1/411421, University P.O. Palayam, THIRUVANANTHAPURAM 695034	[illegible]
*Branch Office: 5 Chowringhee Approach, P.O. Princep Street, CALCUTTA 700072	[illegible]
*Branch Office: [illegible] Road, MUMBAI [illegible]	[illegible]

*Available at Regional Offices and Branch Offices

3047931/2026/O/o Dy.CEE/LOCO/GRC/SER

इंटरनेट मानक

Disclosure to Promote the Right To Information

Whereas the Parliament of India has set out to provide a practical regime of right to information for citizens to secure access to information under the control of public authorities, in order to promote transparency and accountability in the working of every public authority, and whereas the attached publication of the Bureau of Indian Standards is of particular interest to the public, particularly disadvantaged communities and those engaged in the pursuit of education and knowledge, the attached public safety standard is made available to promote the timely dissemination of this information in an accurate manner to the public.

"जानने का अधिकार, जीने का अधिकार"
Mazdoor Kisan Shakti Sangathan
"The Right to Information, The Right to Live"

"पुराने को छोड नये के तरफ"
Jawaharlal Nehru
"Step Out From the Old to the New"

IS 3063 (1994): Fasteners - Single coil rectangular section spring lock washers [PGD 31: Bolts, Nuts and Fasteners Accessories]

"ज्ञान से एक नये भारत का निर्माण"
Satyanarayan Gangaram Pitroda
"Invent a New India Using Knowledge"

"ज्ञान एक ऐसा खजाना है जो कभी चुराया नहीं जा सकता है"
Bhartṛhari—Nītiśatakam
"Knowledge is such a treasure which cannot be stolen"

BLANK PAGE

BRUTUM FULMEN

PROTECTED BY COPYRIGHT

3047931/2026/O/o Dy.CEE/LOCO/GRC/SER

IS 3063 : 1994
(Reaffirmed 2004)

भारतीय मानक

बंधक — एक कुण्डली वाले आयताकार सेक्शन स्प्रिंग लाक वाशर — विशिष्टि

(दूसरा पुनरीक्षण)

Indian Standard

FASTENERS — SINGLE COIL RECTANGULAR SECTION SPRING LOCK WASHERS — SPECIFICATION

(Second Revision)

Second Reprint OCTOBER 1997

UDC 621.882.449

© BIS 1994

BUREAU OF INDIAN STANDARDS
MANAK BHAVAN, 9 BAHADUR SHAH ZAFAR MARG
NEW DELHI 110002

March 1994

Price Group 4

3047931/2026/O/o Dy.CEE/LOCO/GRC/SER

FOREWORD

This Indian Standard (Second Revision) was adopted by the Bureau of Indian Standards, after the draft finalized by the Bolts, Nuts and Fasteners Accessories Sectional Committee had been approved by the Light Mechanical Engineering Division Council.

The rectangular section spring lock washers are suitable for use with bolts/nuts assemblies of property class 8.8 or less. For higher property classes other versions such as wavy, conical, etc, are generally used.

Steel spring lock washers serve to compensate the loss in interface tension caused by setting or creep of a bolt/nut assembly provided that they are sufficiently resilient to increase the overall resilience of the assembly and that their inherent springiness can compensate for any loss in tension so that the clamping force required to ensure the reliability of the assembly is maintained.

There may be a relative movement between bolt and nut or the friction between the clamped components is overcome by transverse forces. If this does occur, loosening of the assembly cannot be prevented by spring lock washers.

Thus, when using these components, it should be checked whether the spring lock washers may usefully be applied as the elements maintaining the clamping force.

This standard was originally published in 1965 and revised in 1972. In the present revision following major changes have been made:

a) The title and scope have been modified.

b) Permanent set test has been modified and aligned with DIN 127 : 1987.

c) Permanent load test has been incorporated in line with DIN 127 : 1987.

d) Free height of spring lock washers has been incorporated in the table of dimensions.

e) Non-preferred sizes have been covered under separate table.

f) Spring force test has been incorporated in Annex A for information.

In preparation of this standard, assistance has been derived from:

DIN 127 : 1987 'Spring lock washers with square ends or tang ends'.

DIN 267 (Part 26) : 1987 'Fasteners — Technical supply conditions — Steels spring washer for bolt/nut assemblies'.

3047931/2026/O/o Dy.CEE/LOCO/GRC/SER

Indian Standard

FASTENERS — SINGLE COIL RECTANGULAR SECTION SPRING LOCK WASHERS — SPECIFICTAION

(Second Revision)

1 SCOPE

This standard covers requirements for single coil rectangular section spring lock washers suitable for use with bolts/nuts assemblies involving features of property class 8.8 or less in the size range 2 to 56 mm.

2 REFERENCES

The following Indian Standards are necessary adjuncts to this standard:

IS No.	Title
2629 : 1985	Method for sampling for chemical analysis of metallic materials, Part I (IIIV 5 to IIIV 10) (*second revision*)
4272 : 1975	Steel for spring washers (*first revision*)
6831 : 1973	Methods for sampling non-ferrous metals and alloys

3 TYPES

The spring lock washers shall be of following two types:

Type A — Spring lock washers with bent (*helical spring*) ends.

Type B — Spring lock washers with flat (*square*) ends.

4 DIMENSIONS

The dimensions of the spring lock washers shall be as given in Tables 1A and 1B.

5 MATERIAL

The spring lock washers shall be made from a suitable steel conforming to IS 4272 : 1975 to meet the requirements specified.

6 HEAT TREATMENT

The spring lock washers after coiling shall be suitably heat treated to a hardness of HV 430 to 530.

7 FINISH

Spring lock washers shall be supplied in natural finish unless otherwise specified by the purchaser. At the request of the purchaser washers may be phosphate coated, nickel, nickel, chromed, electrogalvanized, copper plated or cadmium plated. The functional properties of the spring lock washers shall not be impaired as a result of the protective coatings. These coated washers shall be subjected to appropriate treatment as given in the relevant electroplating standard to avoid hydrogen embrittlement.

NOTE — The use of hot dip galvanized spring lock washers is not recommended as it may cause loss of physical properties during the process of galvanizing.

8 DESIGNATION

The spring lock washers shall be designated by the nomenclature, type, nominal size, the number of this standard and the surface protection, if any.

Example:

A spring lock washer of nominal size 10 mm, type A and with phosphate coating shall be designated as follows:

Spring Lock Washer A10 — IS 3063
Phosphate coated

8.1 In case the spring washer is in actual use with T.H. thread, the designation shall be modified as follows:

Spring Lock Washer LHA 10 IS 3063
Phosphate coated

9 GENERAL REQUIREMENTS

9.1 The flat faces of washers and the inner and outer edges shall be smooth and free from burring, scratches, die-marks, deep scratches, etc., although slight hand tool marks shall be permissible.

9.2 Washers shall also be free from burrs, rust, pit marks, loose scale and defects that might affect their serviceability.

3047931/2026/O/o Dy.CEE/LOCO/GRC/SER

9.3 The dimensions and shape of the coil ends shall be to such degree so that the washers do not cause jagging when they are completely compressed and shall not be taken as tangle or link together when in the free condition.

10 SAMPLING AND ACCEPTANCE.

The sampling and acceptance criteria shall be in accordance with IS 6821 : 1972.

11 TESTS

11.1 Hardness Test

The hardness shall be tested in accordance with IS 1501 (Part 1) : 1984. For checking hardness, the washers shall be lightly ground to remove the removal of a decarburised or plated surface. The values shall be measured, where possible, in the middle of the washer surface at the point of contact with the supporting surface.

11.2 Permanent Set Test

The spring lock washer shall be compressed between hardened, flat ground washers (with a hardness of not less than 40 HRC) for two minutes using the compression loads specified in Table 2A and 2B.

The free height of the washers after release of load shall not be less than the values specified in Table 2A and 2B.

11.3 Permanent Load Test

Two spring lock washers, threaded on a bolt and separated from one another by parallel-faced washers (hardened to minimum 300 HV), shall not crack or fracture after 48 hours conditioning at sufficient temperature under the compression loads specified in Tables 2A and 2B.

11.4 Twist Test

A portion of the washer shall be gripped in vice jaws and the equal portion shall be gripped in wrench jaws as shown in Fig. 1. Edges of the wrench jaws shall be sharp and parallel to the vice jaws. The wrench shall then be rotated in a direction that increases the free height of the spring lock washer till the washer is twisted through an angle of 90°. The washer shall show no sign of fracture.

12 PACKING

Unless otherwise specified, spring lock washers shall be packed in cartons of 100, 500 or 1 000. Each carton shall contain spring lock washers of one size only.

13 MARKING

13.1 Each carton containing the spring lock washers shall be marked with the following:

a) Indication of source of manufacture,
b) Nominal size,
c) Type, and
d) Quantity.

13.2 BIS Certification Marking

The product may also be marked with Standard Mark.

13.2.1 The use of the Standard Mark is governed by the provisions of Bureau of Indian Standards Act, 1986 and the Rules and Regulations made thereunder. The details of conditions under which the licence for the use of Standard Mark may be granted to manufacturers or producers may be obtained from the Bureau of Indian Standards.

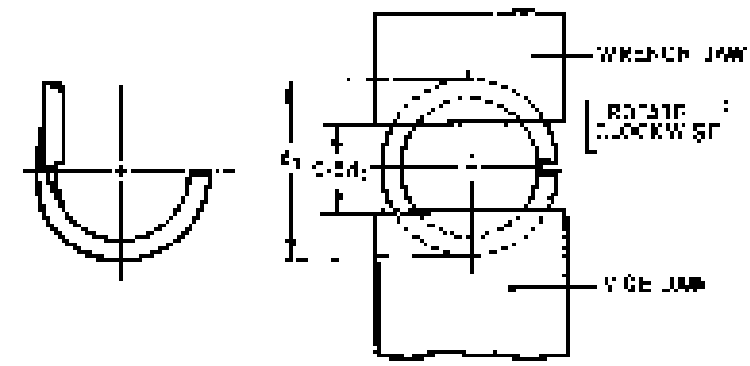

Washer in Twist Gauge

FIG. 1 Twist Test

Table 1A Dimensions for Spring Washers

(Clause 4)

All dimensions in millimetres.

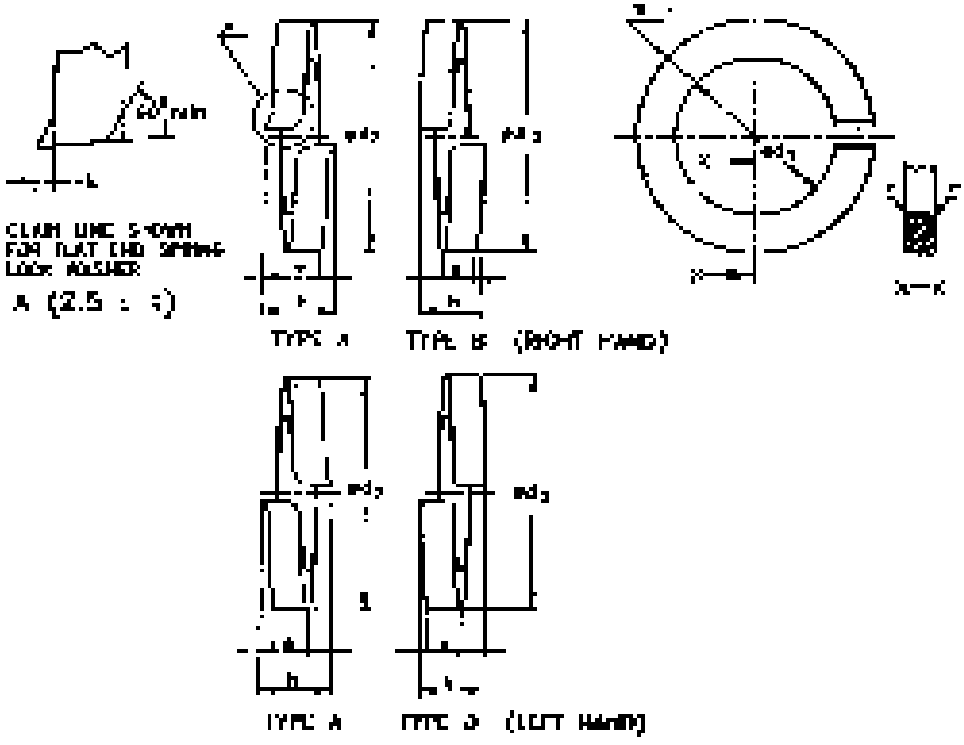

Nominal Size	d_1 Basic	d_1 Tol I	d_2 Max	b Basic	b Tol II	s Basic	s Tol II	r Max	k*	Weight Approx (Per 1 000 Washers) kg	Eye Bolts, Nut or Screw Size	B Type A Min	B Type A Max	B Type B Min	B Type B Max
20	21	0.2	44	3.5	0.1	0.5	0.1	0.1	—	0.031	2		—	1	1.2
22	23	0.3	48	4	0.1	0.6	0.1	0.1	—	0.040	22		—	1.3	1.4
24	25	0.3	51	4	0.1	0.6	0.1	0.1		0.043	24	—	—	1.2	1.4
27	28	0.3	63	4.5	0.1	0.8	0.1	0.2	0.15	0.71	3	1.9	2.1	1.6	1.9
30	31	0.3	75	5.5	0.1	0.9	0.1	0.2	0.15	0.19	4	2.1	2.5	1.8	2.1
36	37	0.3	92	6.5	0.1	1.1	0.1	0.3	0.15	0.36	5	2.7	3.2	2.4	2.8
42	43	0.4	110	7.5	0.15	1.4	0.1	0.3	0.2	0.82	6	3.2	4.3	3.2	3.8
48	49	0.4	140	8	0.15	2	0.1	0.3	0.2	0.93	8	4.6	5.4	4	4.7
56	57.2	0.5	160	9.5	0.2	2.2	0.15	0.5	0.3	3.27	10	5	5.9	4.9	5.7
64	65.2	0.5	175	11	0.2	2.5	0.15	0.5	0.4	3.42	12	5.6	6.8	5	5.9
76	76.2	0.5	200	13	0.2	2.5	0.2	0.5	0.4	5.32	16	7.8	9.2	7	8.5
90	90.3	1	225	15	0.2	3	0.2	1.0	0.4	7.12	20	11.6	10.4	8	9.4
104	104.3	1	250	17	0.25	3	0.2	1.0	0.5	9.07	24	11	13	10	11.8
120	120.5	1.5	285.5	20	0.25	3	0.2	1.5	0.6	14.9	30	12.6	16.7	12	14.7
140	140.5	1.5	325.2	10	0.25	4	0.3	1.5	0.8	17.7	36	17.6	16.1	13	14.2
160	162.5	1.5	365.2	1	0.35	4	0.35	2	0.8	5.1	42	17.6	18.4	14	16.5
180	180	1.5	405	12	0.25	4	0.25	2	0.8	13.1	48	19.5	18.4	14	16.5
200	200	1.5	451	14	0.25	5	0.25	2	1	180	52	15	21.2	16	18.9
220	220	1.5	497	14	0.25	5	0.25	2	1	196	56	18	21.2	16	18.9
250	250	1.5	561	15	0.35	5	0.25	2	1	220	60	19	21.2	16	18.9
280	280	1.5	625	24	0.35	8	0.25	2	1	318	64	18	21.2	16	18.9
300	300	1.5	674	14	0.25	5	0.25	2	1	330	68	23	21.2	16	18.9
320	320	1.5	705	14	0.25	5	0.25	2	1	340	72	18	21.2	16	18.9
360	360	1.5	810	11	0.35	5	0.35	2	1	350	80	18	21.2	16	18.9
400	400	1.5	901	14	0.35	6	0.25	2	1	360	80	18	21.2	16	18.9
100	101	1.5	1.1	15	0.25	8	0.25	2	1	310	100	18	21.2	16	18.9

* The values for the spring washers marked as Class A are not as yet been specified for Class number class.

** The values for the permanent washers have not as yet been specified for all the nominal sizes.

NOTE — Dimensions specified apply before coating.

The head A shall be made on the front of the washer, and adjacent without any sharp angle.

Table 10 Dimensions for Spring Washers of Non-preferred Sizes

(Clause 4)

All dimensions in millimetres.

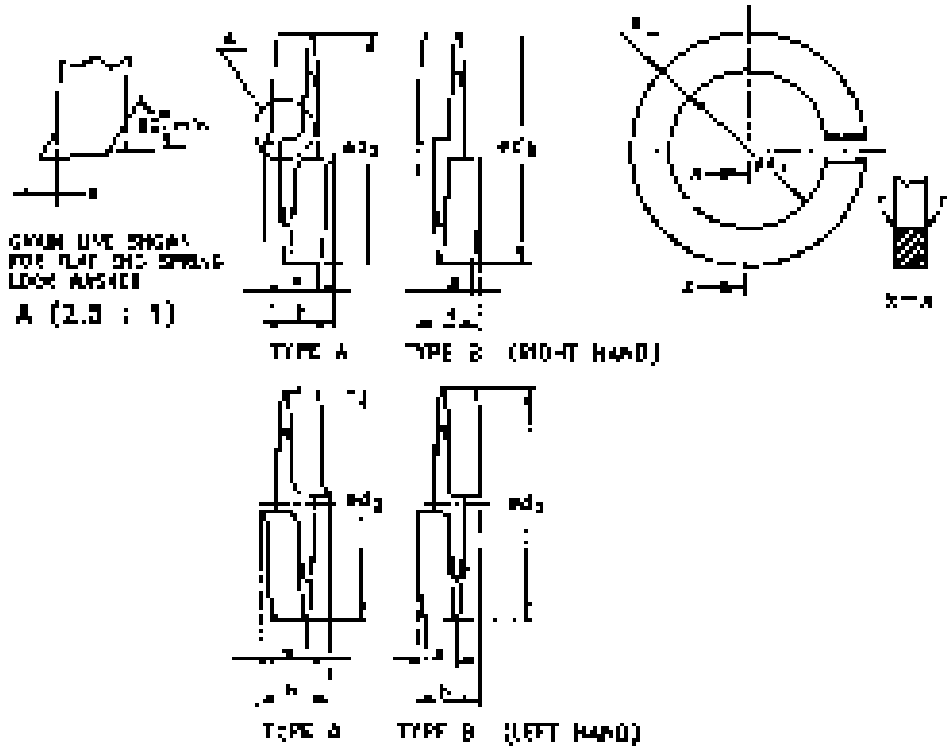

Nominal Size	d_1 Basic	d_1 Tol −	d_2 Max	b Basic	b Tol +	s Basic	s Tol ±	r Min	$t^{a)}$	Weight Approx (7.85 kg/dm³) kg/1 000 pcs	Bar Bolt, Nut or Screw Size	h Type A Min	h Type A Max	h Type B Min	h Type B Max
[illegible]	3.6	0.3	6.7	1.2	0.1	0.8	0.1	0.2	0.15	0.12	[illegible]	[illegible]	[illegible]	[illegible]	[illegible]
7.1	7.1	[illegible]	12.6	2.5	0.15	1.2	0.1	0.3	0.3	0.09	[illegible]	[illegible]	[illegible]	[illegible]	[illegible]
14	14.2	[illegible]	26.1	4.5	0.2	3	0.15	1.0	0.4	0.01	14	[illegible]	5	6	7.1
18	18.2	[illegible]	29.6	5	0.2	3.5	0.2	1.0	0.4	0.12	[illegible]	[illegible]	9.3	7	8.9
22	22.5	1	36.9	6	0.3	4	0.2	1.0	0.4	16.5	22	8.8	10.4	8	9.4
27	27.9	1	41	7	0.35	4	0.2	1.6	0.5	[illegible]	27	11	12	10	11.8
33	33.5	1.2	54.2	10	0.35	6	0.2	1.6	0.8	[illegible]	33	13.6	[illegible]	12	14.2
[illegible]	39.5	1.2	61.2	10	0.45	6	0.2	1.6	0.8	[illegible]	39	15.6	[illegible]	12	[illegible]
[illegible]	45.5	1.2	71.2	12	0.25	7	0.25	2	0.8	117	45	13.6	[illegible]	16	16.3

a) The values for the spring force are as described in Annex A and are not specified for each nominal size.

b) The values for the permitted out of flatness are not specified for each nominal size.

NOTES — 1 Dimensions specified apply before coating.

2 The bend h shall be made on the two sides of the washer circumference without any clamp angle.

Table 1A Compression Load and Free Height of Washers After Compression

(Clause 1.1.2 and 1.1.3)

Nominal Size	Compressive Load	Minimum Free Height
mm	N	mm
[illegible]	[illegible]	[illegible]
[illegible]	[illegible]	[illegible]
[illegible]	[illegible]	[illegible]
[illegible]	[illegible]	[illegible]
[illegible]	[illegible]	[illegible]
[illegible]	[illegible]	[illegible]
[illegible]	[illegible]	[illegible]
[illegible]	[illegible]	[illegible]
[illegible]	[illegible]	[illegible]
[illegible]	[illegible]	[illegible]
[illegible]	[illegible]	[illegible]
[illegible]	[illegible]	[illegible]
[illegible]	[illegible]	[illegible]

Table 1B Compression Load and Free Height of Washers of Non-Preferred Sizes After Compressing

(Clauses 1.1.2 and 1.1.3)

Nominal Size	Compressive Load	Minimum Free Height
mm	N	mm
[illegible]	[illegible]	[illegible]
[illegible]	[illegible]	[illegible]
[illegible]	[illegible]	[illegible]
[illegible]	[illegible]	[illegible]
[illegible]	[illegible]	[illegible]
[illegible]	[illegible]	[illegible]

ANNEX A

(*Referred to in Tables 1A and 1B*)

SPRING FORCE TEST

A-1 SPRING FORCE TEST

A spring force test may be carried out in order to assess the springiness of spring washers, thereby permitting the residual spring force to be determined.

Place the washer to be tested in a test device and apply the compression load specified in Tables 1A and 1B the test device being designed to permit a uniform compression of the washer as possible. The pressure platen shall have a surface hardness of not less than 40 HRC. After two minutes, the load applied to the spring washer shall be slowly and gradually released through a travel of 20 mm, which shall be measured using a precision measuring device (see A-2).

The residual spring force shall reach the values mentioned in Tables 1A and 1B and no allowance being made for any deformation of the test device.

The Explanatory Notes describe a suitable test device and include examples of spring characteristics.

The residual spring force values represent provisional specifications with which experience has yet to be gained. Table 3 summarizes the residual spring force requirements.

Table 3 Residual Spring Force

(Clause A-1)

Type of Washer	Compression Load Corresponding to the Proof Load for Property Class	Residual Spring Force after Release Travel of 20 mm as a Percentage of the Compressive Load
Spring washers (specified in IS 3063)	[illegible]	[illegible] for nominal sizes [illegible] [illegible] for nominal sizes [illegible] [illegible] for nominal sizes [illegible] [illegible] for nominal sizes [illegible]

NOTE — Spring washers which are only intended for nonfunctional fastening purposes or for temporary use that will not be loaded to compression loads corresponding to properly class 8.8 proof loads.

A-2 EXPLANATORY NOTES TO SPRING FORCE TEST

The residual spring force specified are based on tests and the relevant technical literature, but are not as yet sufficiently substantiated for them to be made mandatory for acceptance inspection at present. Before mandatory data

can be operated. Further experience and more results are needed in order to establish a statistically reliable detailed evaluation.

The same compression force used for the permanent set and compression load tests apply to test the spring force test.

When determining the spring characteristic of spring lock washers as part of the spring force test, the effect of the elastic deformation of the test device is to be allowed for by deducting the spring travel originating in the test device from the overall travel (i.e. that of spring washer and test device). The relief characteristic of the test device is to be determined as follows.

Place a plain washer instead of a spring washer in the test device (see Fig. 2 for example). The plain washer being taped on both sides and having a tolerance on parallelism not exceeding 1 µm and a hardness of not less than 700 HV. The washer dimensions (inside diameter, outside diameter, and thickness) shall be identical to those of the spring washer to be tested. Plot the relief characteristic of the test device consisting of the compressions loads specified in Tables 4A and 4B. It is essential that parallel faced washers having the same concentricity as the spring lock washers to be tested be used when recording the relief characteristic of the test device, as different-sized washers will give different characteristics.

In Fig. 8, the continuous line represents the total relief characteristic of spring lock washer plus test device for a 18-30/3 (M12) Steel spring lock washer measured under a compression load of 20 kN, and the dashed line, the relief characteristic of device only. A segment of the relief characteristic of the spring lock washer obtained by subtraction of the two curves is plotted as a chain line.

To avoid any measuring error of the force measuring device and the travel gauge, the values of compression load specified in Tables 4A and 4B may be exceeded by 5% when applying the load. The starting point for measuring the 20 µm travel shall however, be the compression load specified (see Fig. 4).

Although the 20 µm travel is in most cases larger than the probable movement of setting of a bolt/nut assembly due to surface roughness and coatings, this travel can be reproduced in the test with relatively greater accuracy than a 5 µm or 10 µm travel.

Thus, the residual spring forces given in Tables 4A and 4B represent values for the clamping forces of bolt/nut assemblies exhibiting an exceptionally high degree of setting or yielding forces. The test height of spring lock washers after removal of the proof load, which

Table 4A Compression Loads and Minimum Residual Spring Force

(Clauses A-1 and A-2)

Nominal Size	Compression Load [1]	Minimum Residual Spring Force
mm	N	N
4	2 000	600
5	3 000	1 100
6	5 000	2 100
8	12 000	5 100
10	20 000	9 200
12	30 000	14 000
16	50 000	25 000
20	85 000	45 000
24	125 000	65 000
30	200 000	102 000
36	290 000	145 000

[1] Compressive force in accordance with Annex A.

Table 4B Compression Loads and Minimum Residual Spring Force of Washers of Non Preferred Sizes

(Clauses A-1 and A-2)

Nominal Size	Compression Load	Minimum Residual Spring Force
mm	N	N
14	40 000	20 000
18	60 000	30 000
22	100 000	50 000
27	160 000	80 000
33	250 000	125 000

was previously the sole spring characteristic specified, gives only little indication of the ability of a spring lock washer to maintain the tightness of a bolt/nut assembly, as the greatest relief travels are in the very initial part of the characteristic where the forces are very small. The curve plotted in Fig. 7, which covers a travel range of 0·2 mm does not reach zero force until after a total relief travel of approximately 2·5 mm.

This shows that, though basically simple, the test device must satisfy a number of requirements of rigidity, reproducibility and repeatability if results are to be obtained. Figure 2 illustrates a test device suitable for both characteristic and mechanical measurements. For the mechanical measurements of the test device, the following specifications apply:

1) Low resilience and, if possible, only elastic plus compressive deformation without flexural deformation of the components of the test device, in particular in the zone where the force is transmitted from the pressure plates to the bearing plate and the upper part of the pedestal.

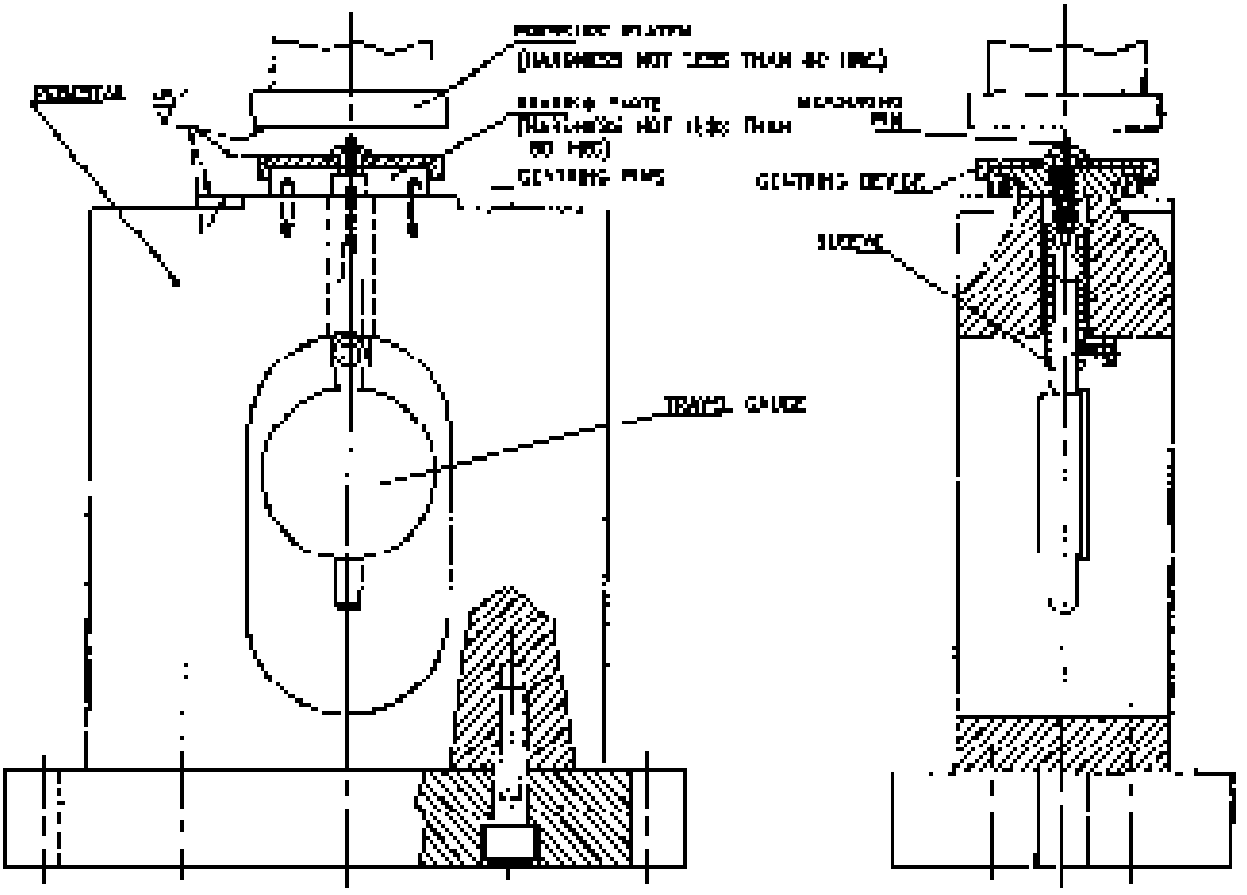

FIG. 2 ESSAYING OF TOOTH DEVICE

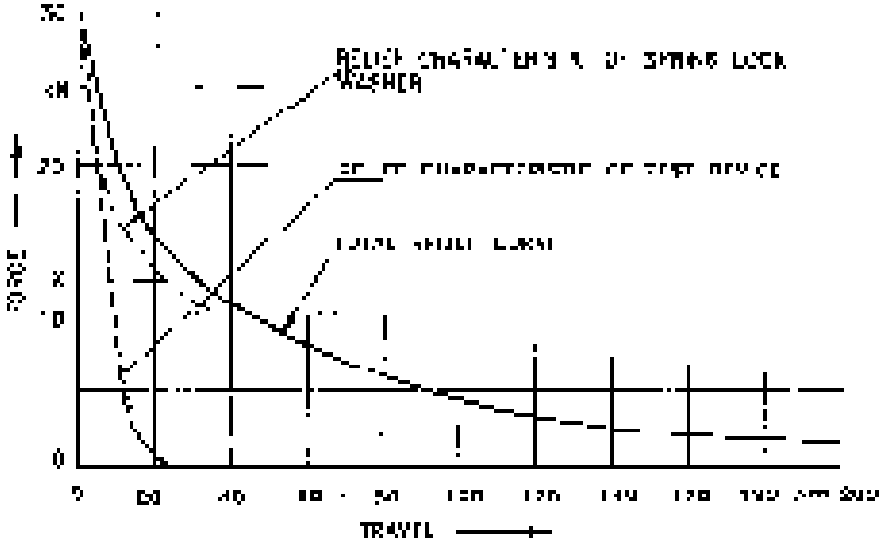

FIG. 3 DETERMINATION OF SPRING CHARACTERISTICS (RELIEF CHARACTERISTIC) FOR A SPRING LOCK WASHER A12 — IS 2062 STEEL (USING A COMPRESSION TOOL OF 20 kN)

3047931/2026/O/o Dy.CEE/LOCO/GRC/SER

2) Counter bore in the pedestal permitting the passage of the measuring pin of the travel gauge and that of the sleeve specified under item 3).

3) Fastening of travel gauge using a sleeve exactly at the same height as the upper face of the bearing plate so as to ensure that the error resulting from the inherent foreshortening of the gauge is as small as possible.

4) Bearing plate and sleeve removable, so that bearing plates for different washer diameters can be used.

5) All surfaces via which the forces are applied and the deformations of which are included in the travel measurements shall have a roughness, R_a, not exceeding 0·4 (corresponding to R_t not exceeding 1·6 μ).

6) The bearing plate and the pressure plates shall have a hardness of not less than 60 HRC.

7) The pressure plates shall be guided so as to be parallel to the bearing plate, a useful feature being a play of some tenths of a millimetre in the plane of the bearing plate to compensate for small electric forces (this is generally provided for in universal testing machines).

8) The compressing load shall be adjustable to within 2% and it shall be possible to read the residual spring force to within 2%.

9) The dial indicator, the inductive travel gauge or any other travel gauge used may only have a relative repeatability error and reversibility error not exceeding 1 μm for any partial measuring range of 40 μm, the direction of movement of the measuring pin being away from the gauge.

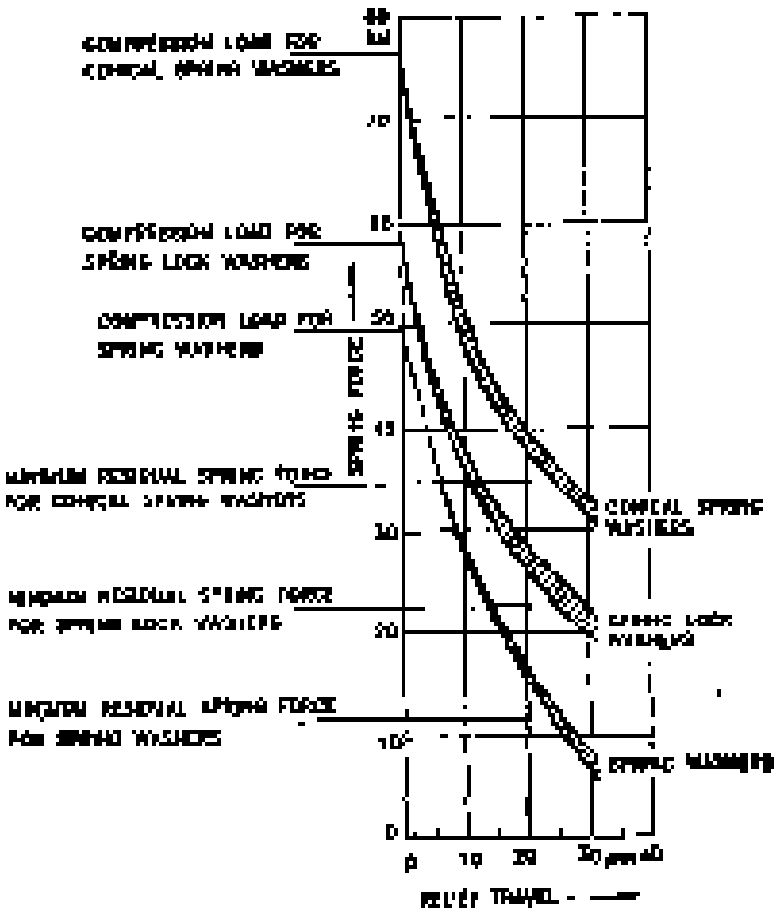

FIG. 4 GRAPHS REPRESENTING RELEASE TRAVELS AND RESIDUAL SPRING FORCES FOR VARIOUS SPRING WASHERS (NOMINAL SIZE 16)

3047931/2026/O/o Dy.CEE/LOCO/GRC/SER

Bureau of Indian Standards

BIS is a statutory institution established under the *Bureau of Indian Standards Act, 1986* to promote harmonious development of the activities of standardization, marking and quality certification of goods and attending to connected matters in the country.

Copyright

BIS has the copyright on all its publications. No part of these publications may be reproduced in any form without the prior permission in writing of BIS. This does not preclude the free use, in the course of implementing the standard, of necessary details, such as symbols and sizes, type or grade designations. Enquiries relating to copyright be addressed to the Director (Publication), BIS.

Review of Indian Standards

Amendments are issued to standards as the need arises on the basis of comments. Standards are also reviewed periodically; a standard along with amendments is reaffirmed when such review indicates that no changes are needed; if the review indicates that changes are needed, it is taken up for revision. Users of Indian Standards should ascertain that they are in possession of the latest amendment or edition by referring to the latest issue of 'BIS Handbook' and 'Standards Monthly Additions'.

This Indian Standard has been developed from Doc: No. TM 14 : 3207 p.

Amendments Issued Since Publication

Amend No.	Date of Issue	Text Affected

BUREAU OF INDIAN STANDARDS

Headquarters:

Manak Bhavan, 9 Bahadur Shah Zafar Marg, New Delhi 110002 — Telegrams: Manaksanstha (Common to all offices)
Telephones: 323 01 31, 323 33 75, 323 94 02

Regional Offices: — Telephone:

Central : Manak Bhavan, 9 Bahadur Shah Zafar Marg, NEW DELHI 110002 — 323 76 17, 323 38 41

Eastern : 1/14 C.I.T. Scheme VII M, V.I.P. Road, Maniktala, CALCUTTA 700054 — 337 84 99, 337 85 61, 337 86 26, 337 91 20

Northern : SCO 335-336, Sector 34-A, CHANDIGARH 160022 — 60 28 43, 60 20 25

Southern : C.I.T. Campus, IV Cross Road, CHENNAI 600113 — 235 02 16, 235 04 42, 235 15 19, 235 23 15

Western : Manakalaya, E9 MIDC, Marol, Andheri (East), MUMBAI 400093 — 832 92 95, 832 78 58, 832 78 91, 832 78 92

Branches : AHMADABAD. BANGALORE. BHOPAL. BHUBANESHWAR. COIMBATORE. FARIDABAD. GHAZIABAD. GUWAHATI. HYDERABAD. JAIPUR. KANPUR. LUCKNOW. NAGPUR. PATNA. PUNE. THIRUVANANTHAPURAM.

Printed by Reprographic Unit, BIS, New Delhi

[illegible]	[illegible] 2017	[illegible]	[illegible] Rev. 01

SCHEDULE OF TECHNICAL REQUIREMENTS FOR MANUFACTURE AND SUPPLY OF FOLLOWING FOR THREE PHASE ELECTRIC LOCOMOTIVES

1.0 **NAME OF THE ITEM**

(i) NICKER DOWN BOLT, (ii) THREADED BOLT, (iii) BOLT, (iv) ANY OTHER NON-FUNCTIONAL HARDWARE OF SIMILAR TYPE

2.0 **APPLICATION**

Used in Three Phase Mono-Wave Diesel or Electric Locomotives of Indian Railways. The items are to be manufactured as per relevant drawings and specifications.

3.0 **SCOPE**

The Schedule of Technical Requirements (STR) is issued to serve as a guide to manufacturers (called the Firm hereafter) and should be read in conjunction with the relevant drawings and specifications with latest Revisions / Alterations. The technical requirements are meant to serve as guidelines only and are not exhaustive. The firm should satisfy themselves fully complied with the requirements of relevant and STR. List of relevant Drawings / Specifications is listed at Annexure-I.

Whenever railway / RDSO issued revision, must and strictly that firm should to fulfill the requirements of this STR within a period of One year from date of issue of this STR.

4.0 **GENERAL REQUIREMENTS**

The firm should have currently valid ISO 9001 certification issued by an approved agency of the International Accreditation Forum (IAF) with the activity scope clearly mentioned in the scope of certification.

4.1 The firm should have currently valid ISO 9001 certification issued by an approved agency of the International Accreditation Forum (IAF) with the activity scope clearly mentioned in the scope of certification.

4.1 A system of regular submission of inspection details of method of giving rejection (qty, details of rejection, corrective action) and qty on quarterly basis should be followed by firm.

4.2 The firm must have system of documentation in respect of rejection at customer and warranty replacement and issue of firm supplied by them during service.

4.3 The firm shall have all latest relevant Standards like IS, DIN, ISO etc. pertaining to product specification.

[illegible]	[illegible]	[illegible]
[illegible]	[illegible]	[illegible]
JF/DHG	SMG/D	[illegible]

[illegible]

4.6 [illegible] checking [illegible] of [illegible] [illegible] etc.

4.6 The firm's [illegible] equipment shall be duly calibrated and the validity of calibration should be current and verified by physically checking the calibration certificate issued by Calibration Agency from [illegible] 2 year calendar. Calibration shall be done by NABL accredited lab where acc. calibration is not on the firm of calibration.

4.7 Firm should have adequate trained personnel and service after sales network.

4.8 Whatever there is any change with respect to approved QAP, the same shall be promptly submitted to CLW for approval.

5.0 QUALITY ASSURANCE PLAN (QAP)

The firm shall prepare a Quality Assurance Plan (QAP) before approval is sought and submit the same as part of compliance of the RFR. The QAP shall be a comprehensive document covering the following aspects.

i) Details of Quality Control Organization of the firm along with key personnel engaged in the QC function.

ii) Qualification log sheet of the personnel manning the quality control set up.

iii) Process flow chart indicating process of manufacture of an individual product or for a family of products for which the scheme is made.

iv) Details of Sub-vendors.

- The name of item for which sub-vendor is approved.
- The name of approving agency.
- Quality manual submitted by sub-vendor to primary vendor.
- The sub-vendor to have all the requisite infrastructure of manufacturing and testing facilities, preferably under one roof. The sub-vendor to identify more with all the minimum requirements laid down in the [illegible]
- The primary vendor is following periodical inspection schedule for sub-vendor stocks.
- ISO Certificate copies of sub-vendor also.
- The sub-vendor should have the [illegible] by CLW.

[illegible]	[illegible]	[illegible]
[illegible] Prepared by	[illegible] Checked by	
[illegible]	[illegible]	[illegible]

3047931/2026/O/o Dy.CEE/LOCO/GRC/SER

iv) Inspection and testing (new or

a) Incoming Material as per Annexure – IV, Clause – 2
b) Periodic (stage inspection) as per Annexure – IV, Clause – 4
c) Product Final Inspection as per Annexure – IV, Clause – 6

v) All the formats used for recording inspection results.

vi) Details of Accurate Big, Handheld Vibrator Sorting is possible from due Analogue Meter to electronic check and Safety not offered for inspection.

vii) All internal audits to be carried out during manufacturing shall be maintained and Schedule Date is accurate to be maintained. All these internal checks shall lead to be signed by Inspecting official before result of inspection. Certificate shall also be furnished.

(c) QAP Format

QAP must be submitting in the form of single document indicating name of the firm and page no. "X of Y" on each page. Each page should be signed by Quality Control In-charge. The approved QAP must be a controlled document and a quality system as ISO 9001:2000 quality system is applied of the firm. A certificate to this effect shall be provided along with QAP by the firm. The QAP must be a bindings in hardware.

Details of the above aspect are mentioned in the following paragraphs. The QAP shall be endorsed by CEE W and shall be a basis of approval process.

5.1 QUALITY CONTROL ORGANIZATION

5.1.1 The complete organizational setup of the Quality Control Key personnel and officer along with their qualification and experience to be by furnished.

5.1.2 The Quality Control Organization should be headed by a senior level official having degree in engineering who shall directly report to plant in charge.

[illegible]	[illegible]	[illegible]
[illegible]	[illegible]	[illegible]

[illegible]	[illegible]	[illegible]	[illegible]

8.0 INCOMING MATERIAL

8.2.1 A complete list of material indicating all raw material items required for manufacturing of the products, governing specification and their sources of supplies be approved by the firm. Vendor list to be enclosed.

8.2.2 Raw material shall be procured from CLW/RDSO approved sources wherever applicable or from Railway approved if no CLW/RDSO source is identified. Documentary proof of procurement and test certificate of each component shall be maintained and produced.

8.2.3 Records of each sub-supplier (Name) showing the quantity purchased and rejected as well as dates of last delivery. A copy shall be kept.

8.2.4 Incoming raw material shall be 100% inspected by Quality Control Department of the firm for any defect and deviation. The test results of incoming raw material with reference to test certificate issued by the supplier and the results of internal tests carried out by the firm for verification thereof be submitted as part of QAP.

8.3 PROCESS OF MANUFACTURING

8.3.1 Complete process flow chart showing all flows of process of manufacture for an individual product or for a family of product of the product is desired, including the process flow of subcontract activities along with its integration with main process, shall be clearly enclosed as part of QAP.

8.3.2 The following details of machine used for all the steps of machining operations should be included:

A Make, model and commissioning date of the machine.
B Accuracy.
C Details of machining operations.

8.3.3 Machining shown / checklist must that all critical dimensions are kept. Visual inspection has indicate in out / or not acceptable.

8.3.4 Details of jigs & of tools used during manufacture should be furnished along with the operations in which they are used.

[illegible]	[illegible]	[illegible]
[illegible]	[illegible]	
[illegible]	[illegible]	[illegible]

[illegible]	[illegible]	[illegible]	[illegible]
[illegible]	[illegible]	[illegible]	[illegible]

5.3.3 List of typical Machinery & Plant, testing and measuring instruments required for manufacture is mentioned in Annexure – II. The list is for general guidance only and manufacturing vendor shall be submitted and got approved by the firm as a part of QAP.

5.4 INSPECTION AND TEST PLAN

5.4.1 Testing setup shall be available in the firm own premises capable of testing the equipments as specified in the overall technical specification.

5.4.2 Complete Inspection and Testing Chart covering all areas of process of manufacture for an individual product including final inspection should be clearly envisaged as part of QAP.

5.4.3 The following details of Testing / Measuring instruments / equipments / tools / jigs / fixtures used for all the stages of manufacture and testing operations should be included:

- Make and Model of the equipment
- Name of the manufacturer
- Accuracy
- Capacity or Rating
- Date of Calibration
- Due date of calibration
- Agency of Calibration

Vague language like verification or will vision is not acceptable.

5.4.4 The accuracy and capacity of the testing and measuring equipments shall be adequate to meet the requirements i.e. the specification and drawing.

5.4.5 Gauge inspection including inspection, inspection, tolerances and method of testing / test procedure including sample size for destructive and non destructive testing. Proforma of test reports of stage inspection should be available and furnished.

5.4.6 List of typical Testing and measuring instruments required for manufacture is mentioned in Annexure – III. The list is for general guidance only. However, the specific Testing & measuring instruments, gauges used in the firm will also form part of QAP and shall be submitted.

[illegible]	[illegible]	[illegible]
[illegible]	[illegible]	[illegible]

3047931/2026/O/o Dy.CEE/LOCO/GRC/SER

[illegible]	[illegible]	[illegible]

[illegible]

[illegible]

[illegible]

- [illegible]
- [illegible]
- [illegible]

[illegible]	[illegible]	[illegible]
[illegible]	[illegible]	[illegible]

[illegible]	[illegible]	[illegible]	[illegible]

ANNEXURE – I

Sl. No.	Item	Drawing/Code	Unit of Issue	Quantity
1	[illegible]	[illegible]	[illegible]	[illegible]
2	[illegible]	[illegible]	[illegible]	[illegible]
3	[illegible]	[illegible]	[illegible]	[illegible]

[illegible] as per Ordering of Lowest Valuation.

[illegible]	[illegible]	[illegible]
[illegible]	[illegible]	[illegible]

3047931/2026/O/o Dy.CEE/LOCO/GRC/SER

ANNEXURE - II

LIST OF MACHINERY AND PLANT

Sl. No.	Name of Machinery & Plant	Capacity / Rating	Purpose	Essential / Optional**
1	Drilling machine	[illegible]	For [illegible] drilling operation as per drawing	Essential
2	Lathe machine	[illegible]	For various machining operations as per drawing	Essential
3	Milling machine	[illegible]	As per drawing	Essential
4	Shaping machine	[illegible]	For various metal machining operation as required	Essential
5	Grinding machine	[illegible]	For [illegible] as per drawing	Essential
6	Gas Cutting machine	[illegible]	For cleaning as necessary	Essential / Optional**
7	Metal Detector Arrangement	[illegible]	As per drawing	Optional**

** Optional activity to be [illegible] by a Plant Facility. Kept for [illegible] purpose. However the [illegible] is yet to be assessed.

NAME AND [illegible]	SIGN AND [illegible]	[illegible]
[illegible]	[illegible]	[illegible]

3047931/2026/O/o Dy.CEE/LOCO/GRC/SER

3047931/2026/O/o Dy.CEE/LOCO/GRC/SER

[illegible]	[illegible]	[illegible]	[illegible]
[illegible]	[illegible]	[illegible]	[illegible]

8. Calibration Plan

Instrument Description	Serial No	Make	Model	Year of Manufacture	Capacity Range	Accuracy	Frequency of Calibration
[illegible]	[illegible]	[illegible]	[illegible]	[illegible]	[illegible]	[illegible]	[illegible]

Calibration Agency	Accuracy Certificate No
[illegible]	[illegible]

7. Approved Sources for Raw Materials / Consumables

Type Material / Consumables	Quantity after Rejection	Source Address	Whether Certified by RDSO / Others
[illegible]	[illegible]	[illegible]	[illegible]

[illegible]	[illegible]	[illegible]
[illegible]	[illegible]	[illegible]