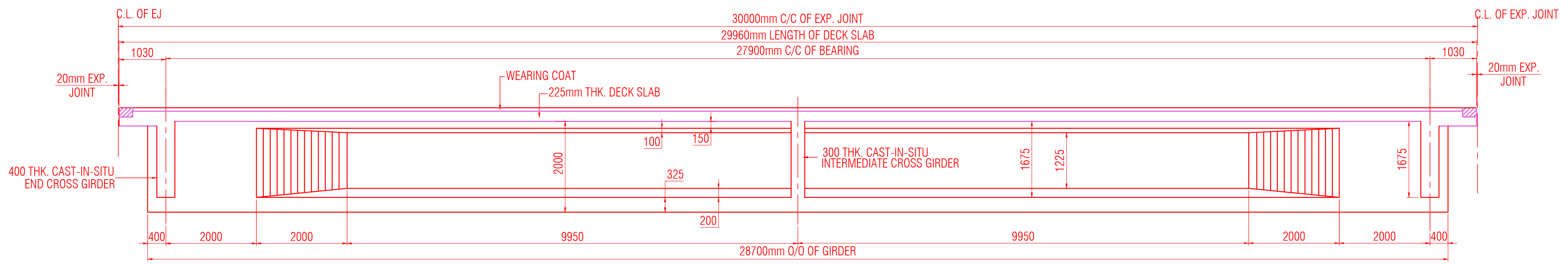
C.L. OF EJ
30000mm C/C OF EXP. JOINT
29960mm LENGTH OF DECK SLAB
27900mm C/C OF BEARING
C.L. OF EXP. JOINT
20mm EXP. JOINT
WEARING COAT
225mm THK. DECK SLAB
400 THK. CAST-IN-SITU END CROSS GIRDER
300 THK. CAST-IN-SITU INTERMEDIATE CROSS GIRDER
28700mm O/O OF GIRDER

SECTION AT "B-B"

SCALE:-1:100

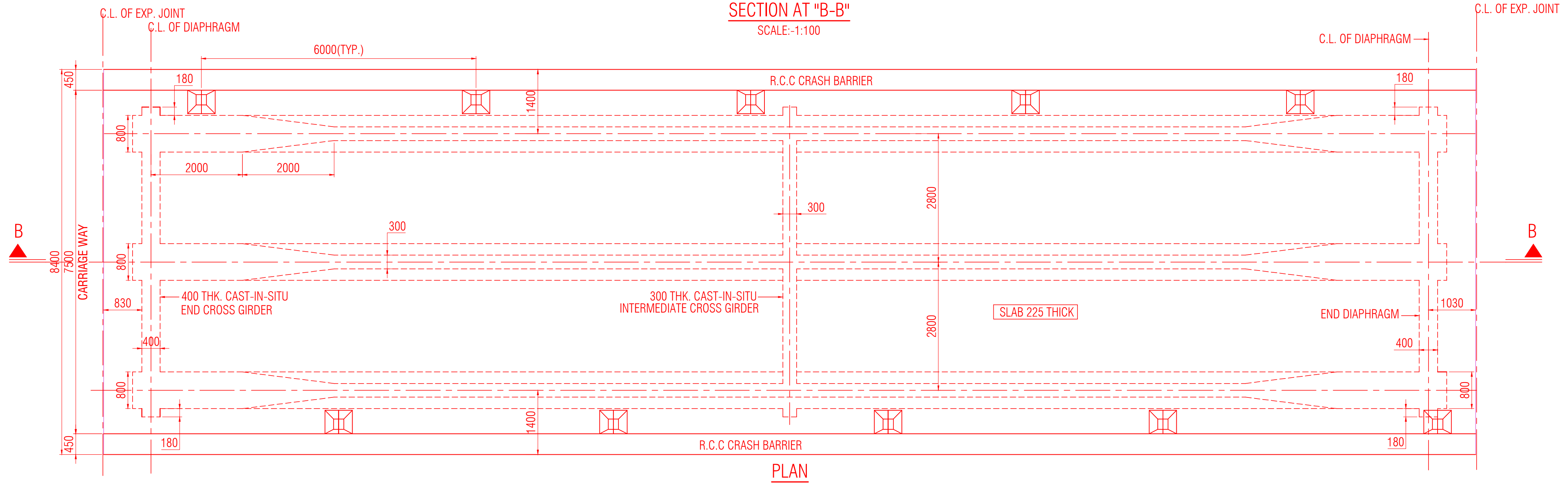
C.L. OF EXP. JOINT
C.L. OF DIAPHRAGM
6000(TYP.)
R.C.C CRASH BARRIER
B
CARRIAGE WAY
400 THK. CAST-IN-SITU END CROSS GIRDER
300 THK. CAST-IN-SITU INTERMEDIATE CROSS GIRDER
SLAB 225 THICK
END DIAPHRAGM

PLAN

30mt. SUPER STRUCTURE (STRAIGHT PORTION)

SCALE:-1:100

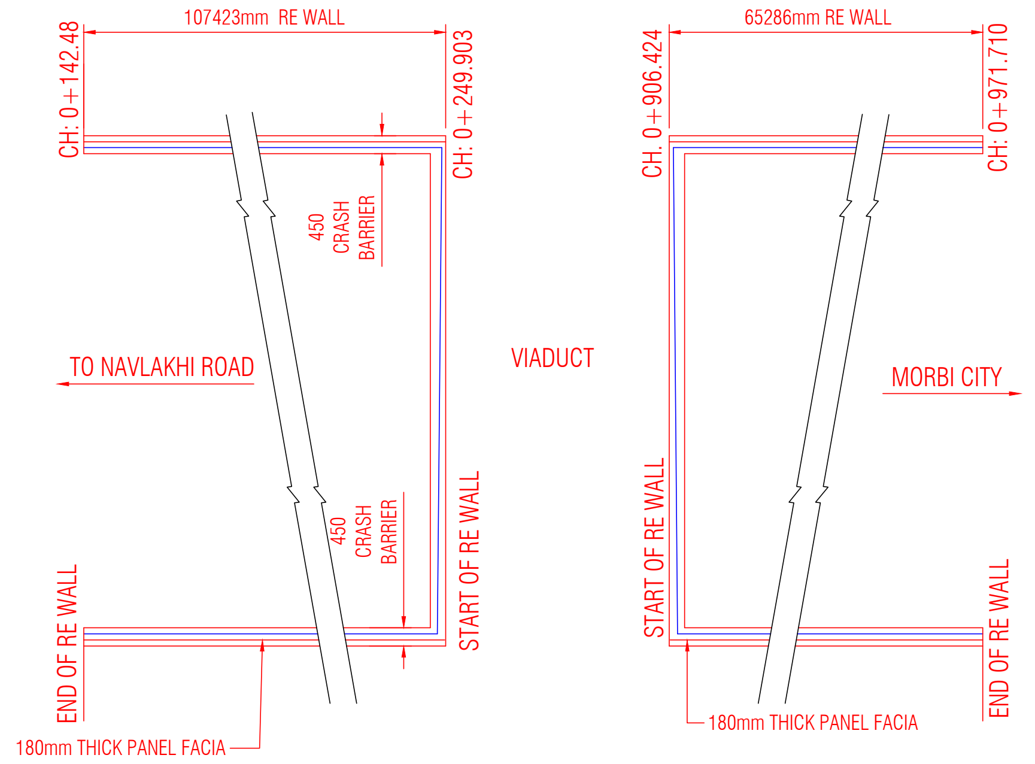
107423mm RE WALL
65286mm RE WALL
CH: 0+142.48
CH: 0+249.903
CH: 0+906.424
CH: 0+971.710
TO NAVLAKHI ROAD
VIADUCT
MORBI CITY
450 CRASH BARRIER
START OF RE WALL
END OF RE WALL
180mm THICK PANEL FACIA

K E Y P L A N FOR RE WALL FOR WING "A"

N.T.S

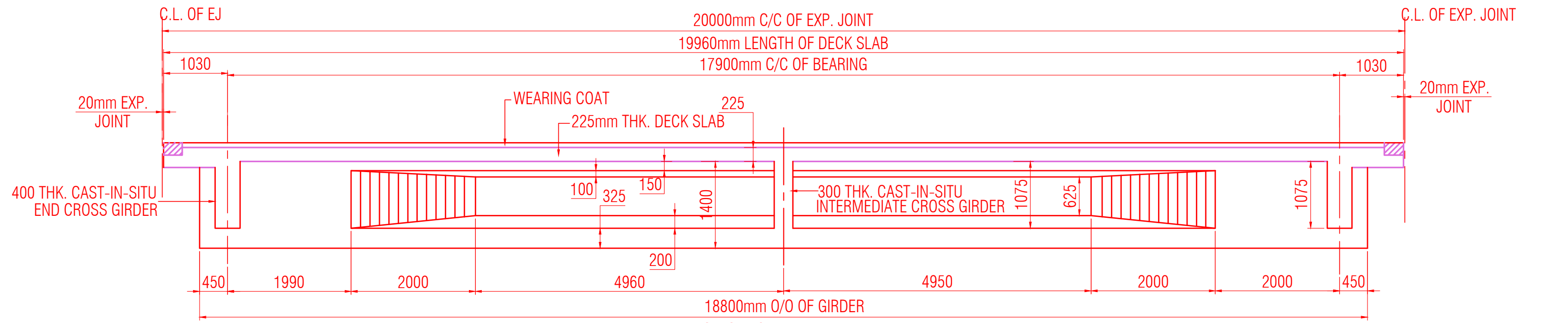
C.L. OF EJ
20000mm C/C OF EXP. JOINT
19960mm LENGTH OF DECK SLAB
17900mm C/C OF BEARING
C.L. OF EXP. JOINT
20mm EXP. JOINT
WEARING COAT
225mm THK. DECK SLAB
400 THK. CAST-IN-SITU END CROSS GIRDER
300 THK. CAST-IN-SITU INTERMEDIATE CROSS GIRDER
18800mm O/O OF GIRDER

SECTION AT "D-D"

SCALE:-1:100

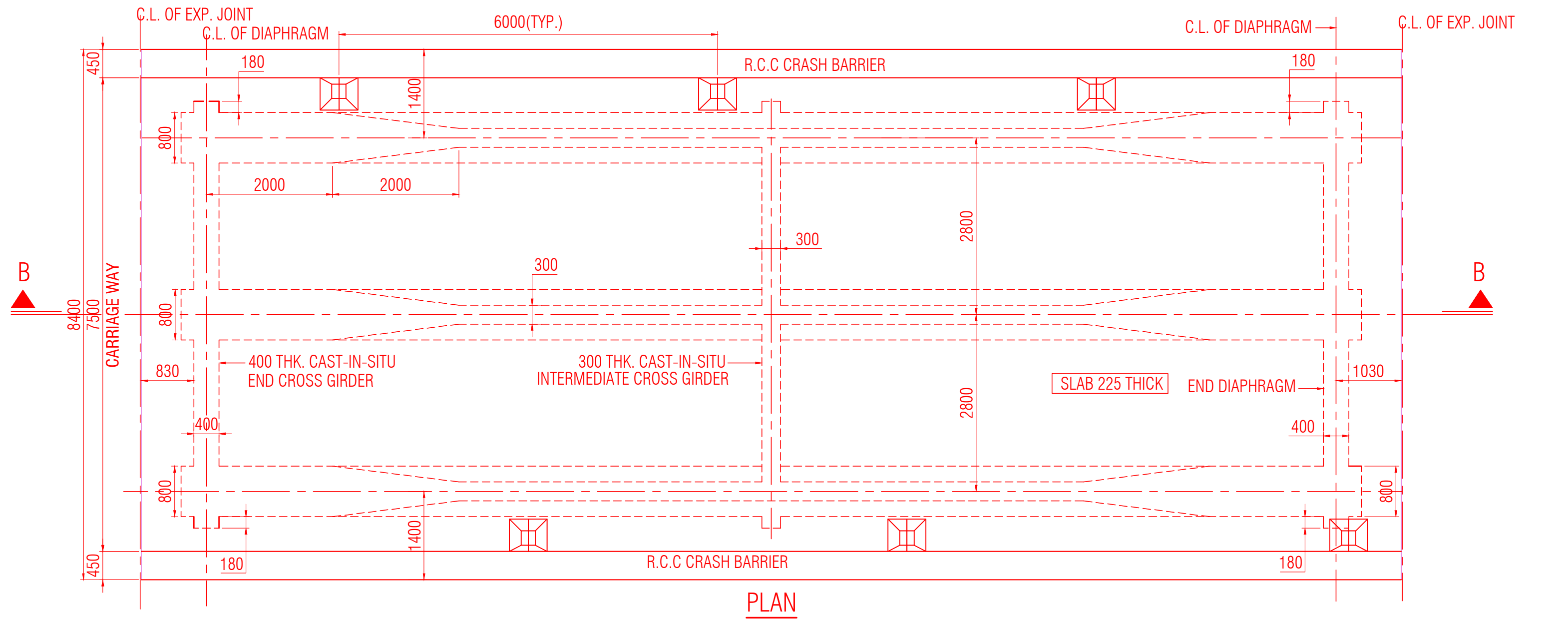
C.L. OF EXP. JOINT
C.L. OF DIAPHRAGM
6000(TYP.)
R.C.C CRASH BARRIER
B
CARRIAGE WAY
400 THK. CAST-IN-SITU END CROSS GIRDER
300 THK. CAST-IN-SITU INTERMEDIATE CROSS GIRDER
SLAB 225 THICK
END DIAPHRAGM

PLAN

20mt. SUPER STRUCTURE

SCALE:-1:100

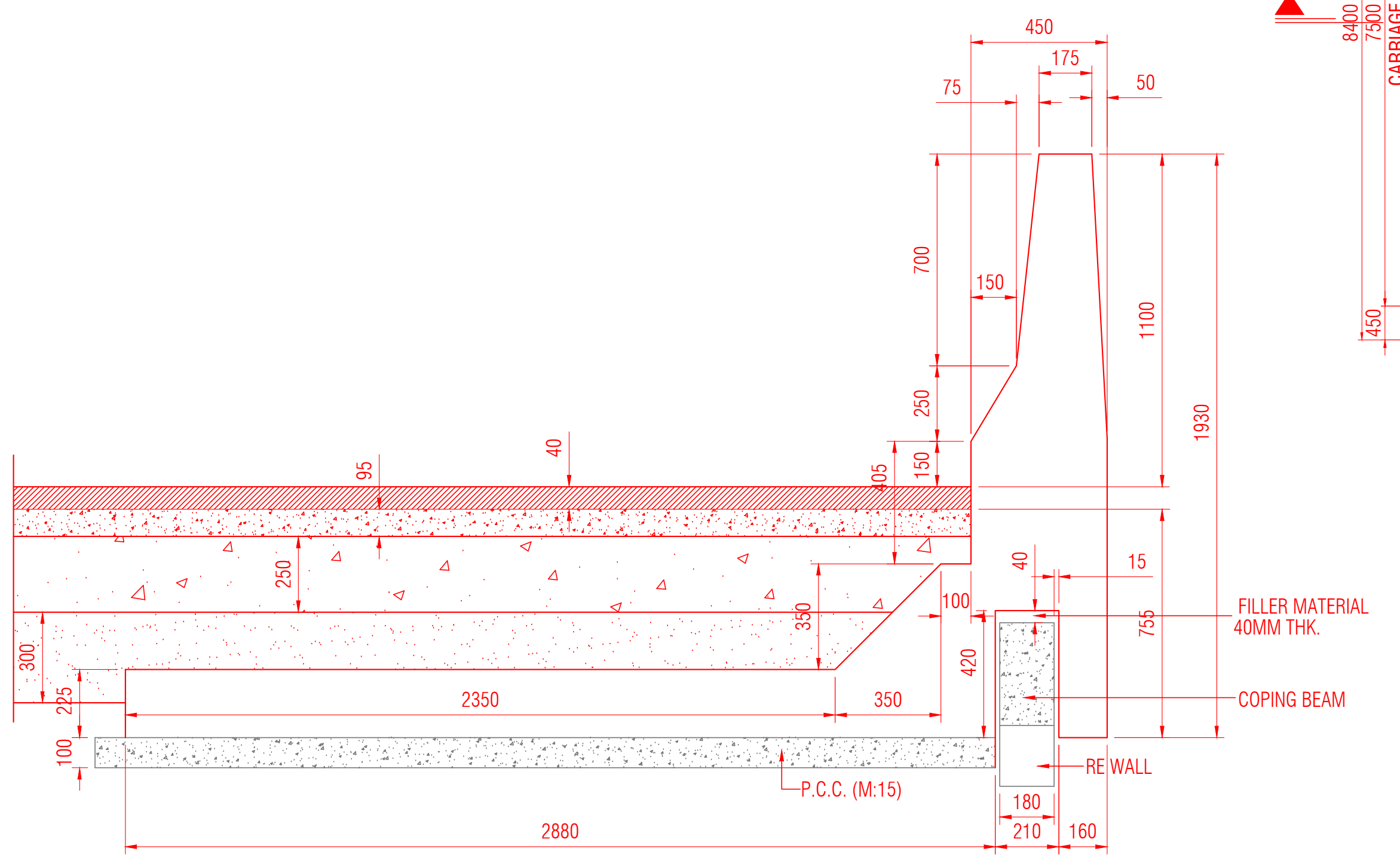
FILLER MATERIAL 40MM THK.
COPING BEAM
RE WALL
P.C.C (M:15)

DETAILS OF CRASH BRARIER WITH FRICTION SLAB

SCALE:-1:25

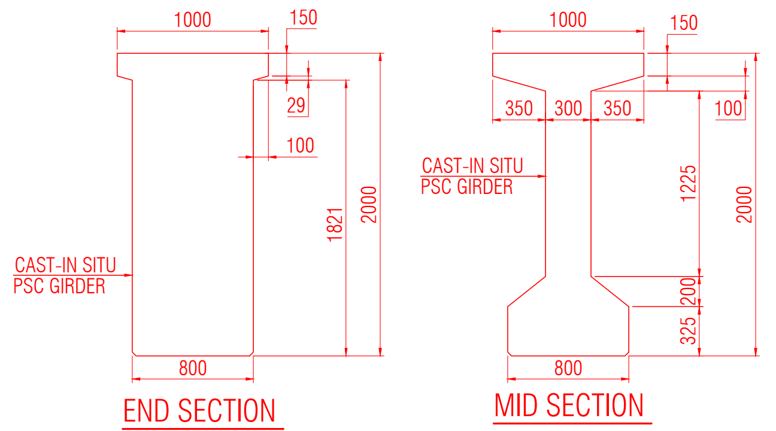
CAST-IN SITU PSC GIRDER
END SECTION
MID SECTION

CROSS SECTION OF 30mt. PSC GIRDER

SCALE:-1:50

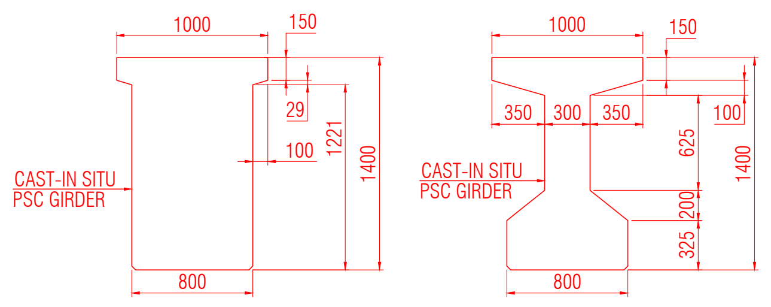
CAST-IN SITU PSC GIRDER
END SECTION
MID SECTION

CROSS SECTION OF 20mt. PSC GIRDER

SCALE:-1:50

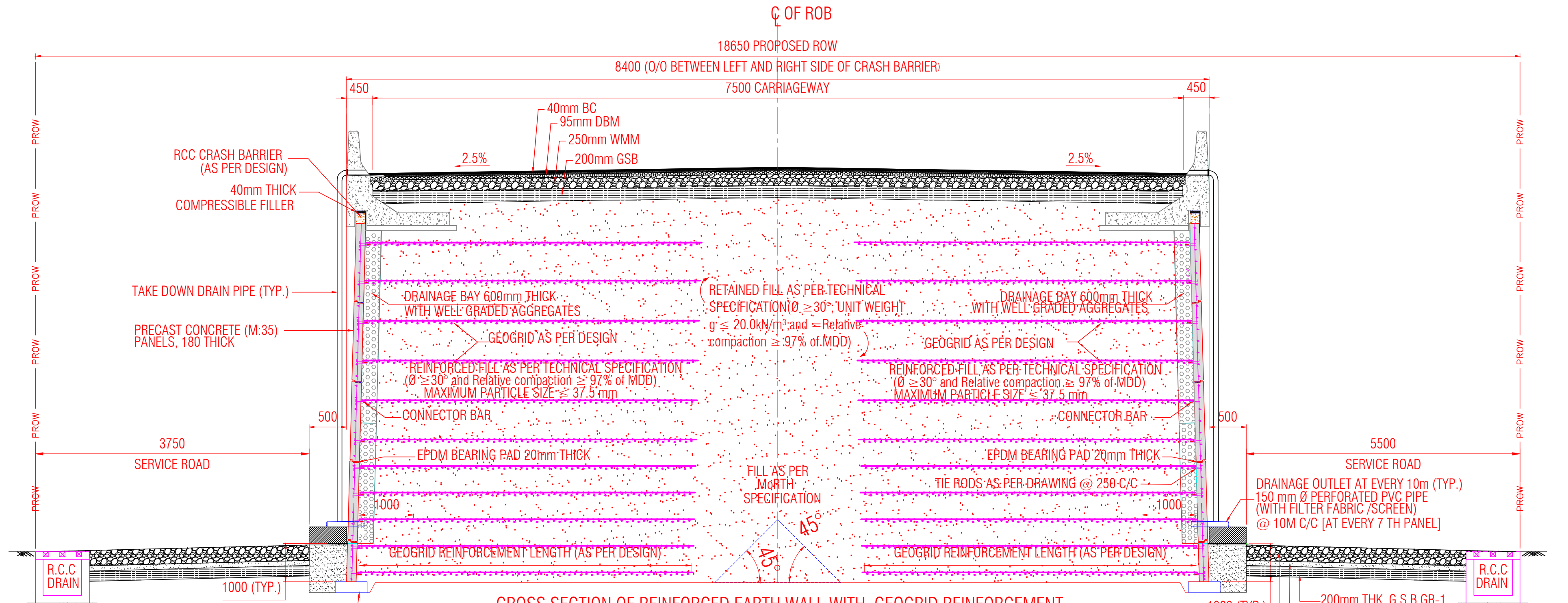
C OF ROB
18650 PROPOSED ROW
8400 (O/O BETWEEN LEFT AND RIGHT SIDE OF CRASH BARRIER)
7500 CARRIAGEWAY
40mm BC
95mm DBM
250mm WMM
200mm GSB
2.5%
RCC CRASH BARRIER (AS PER DESIGN)
40mm THICK COMPRESSIBLE FILLER
TAKE DOWN DRAIN PIPE (TYP.)
PRECAST CONCRETE (M:35) PANELS, 180 THICK
DRAINAGE BAY 600mm THICK WITH WELL GRADED AGGREGATES
RETAINED FILL AS PER TECHNICAL SPECIFICATION
GEOGRID AS PER DESIGN
CONNECTOR BAR
EPDM BEARING PAD 20mm THICK
FILL AS PER MORTH SPECIFICATION
TIE RODS AS PER DRAWING @ 250 C/C
GEOGRID REINFORCEMENT LENGTH (AS PER DESIGN)
SERVICE ROAD
DRAINAGE OUTLET AT EVERY 10m (TYP.) 150 mm Ø PERFORATED PVC PIPE (WITH FILTER FABRIC /SCREEN) @ 10M C/C (AT EVERY 7 TH PANEL)
R.C.C DRAIN
LEVELING PAD (P.C.C. M:15)
200mm THK. G.S.B GR-1
100mm THK. D.L.C
300mm THK. P.Q.C.
PROW

CROSS SECTION OF REINFORCED EARTH WALL WITH GEOGRID REINFORCEMENT AND TECHFORM PANEL FACING (N.T.S.)

AT CHAINAGE 0+142.48 TO 0+249.903 & CH. 0+906.424 TO 0+971.710

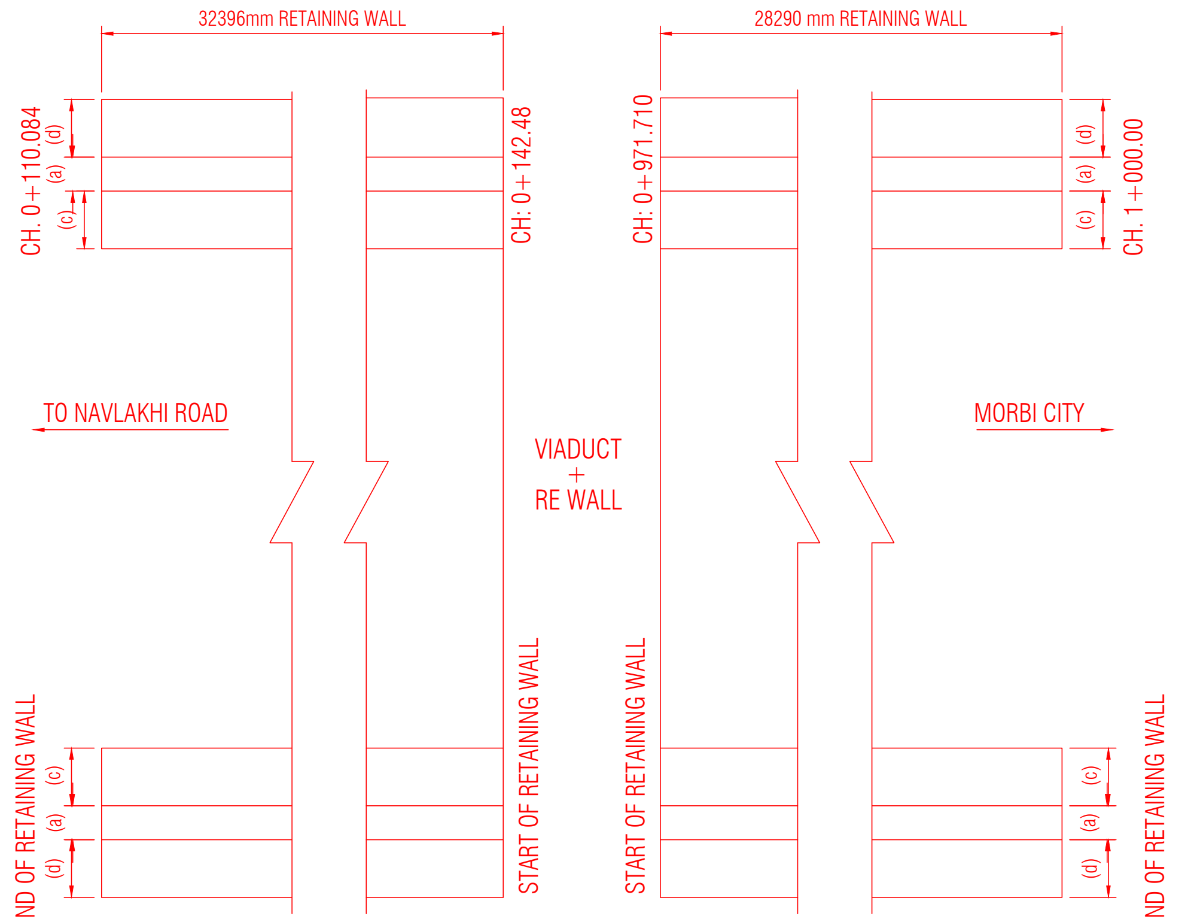
32396mm RETAINING WALL
28290 mm RETAINING WALL
CH: 0+110.084
CH: 0+142.48
CH: 0+971.710
CH: 1+000.00
TO NAVLAKHI ROAD
VIADUCT
RE WALL
MORBI CITY
START OF RETAINING WALL
END OF RETAINING WALL

K E Y P L A N FOR RETAINING WALL FOR WING "A"

N.T.S

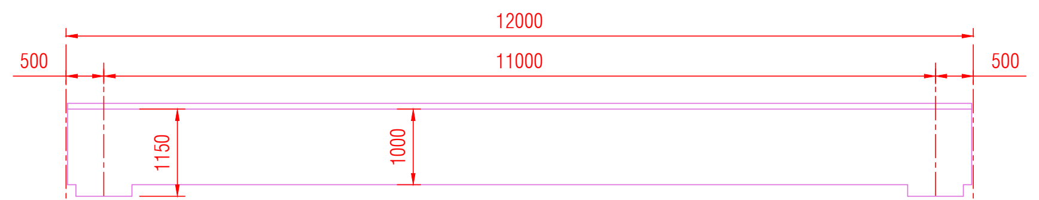
12000
11000
500
1150
1000

ELEVATION FOR SOLID SLAB

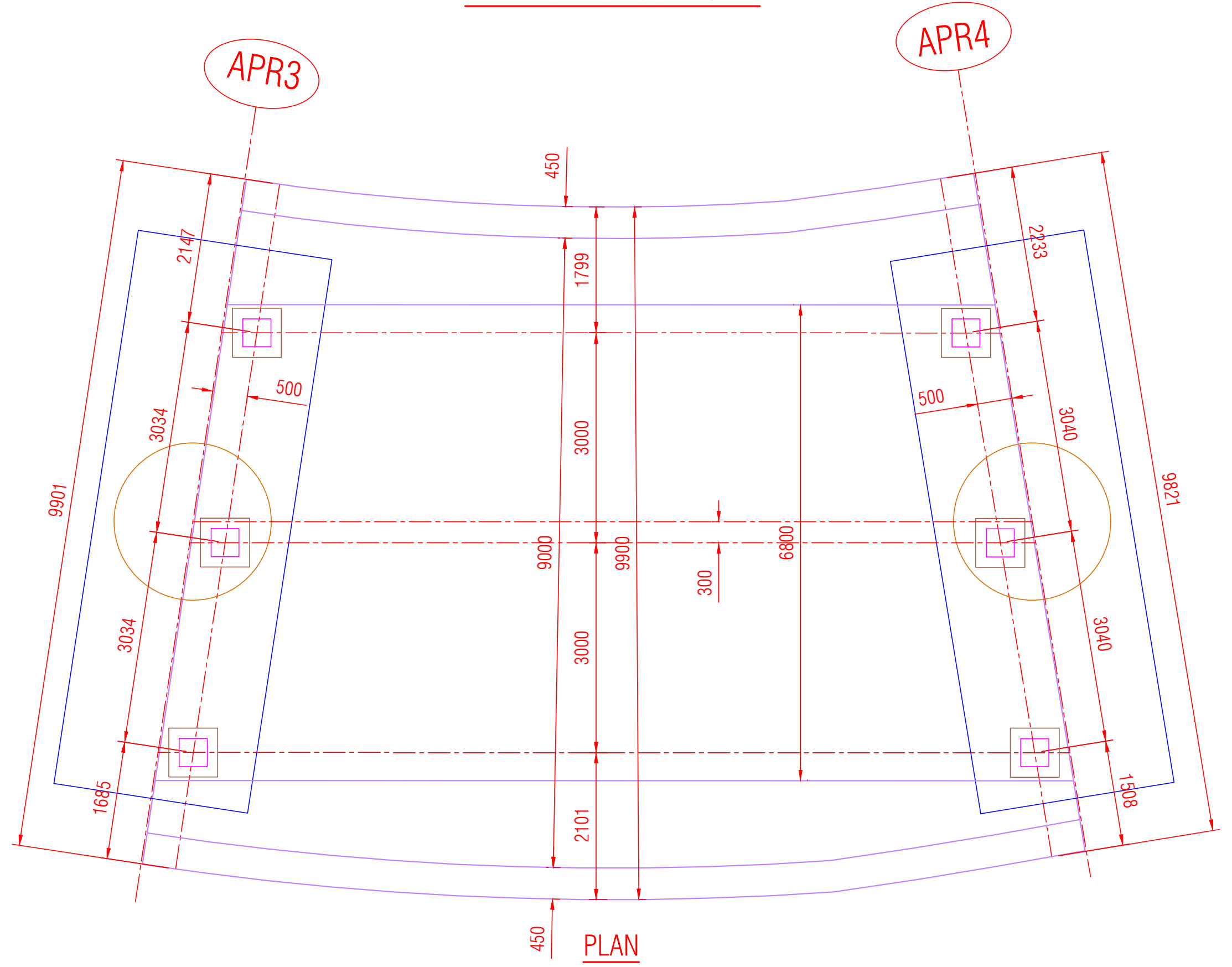

PLAN

12mt. SUPER STRUCTURE (CURVE PORTION)

SCALE:-1:100

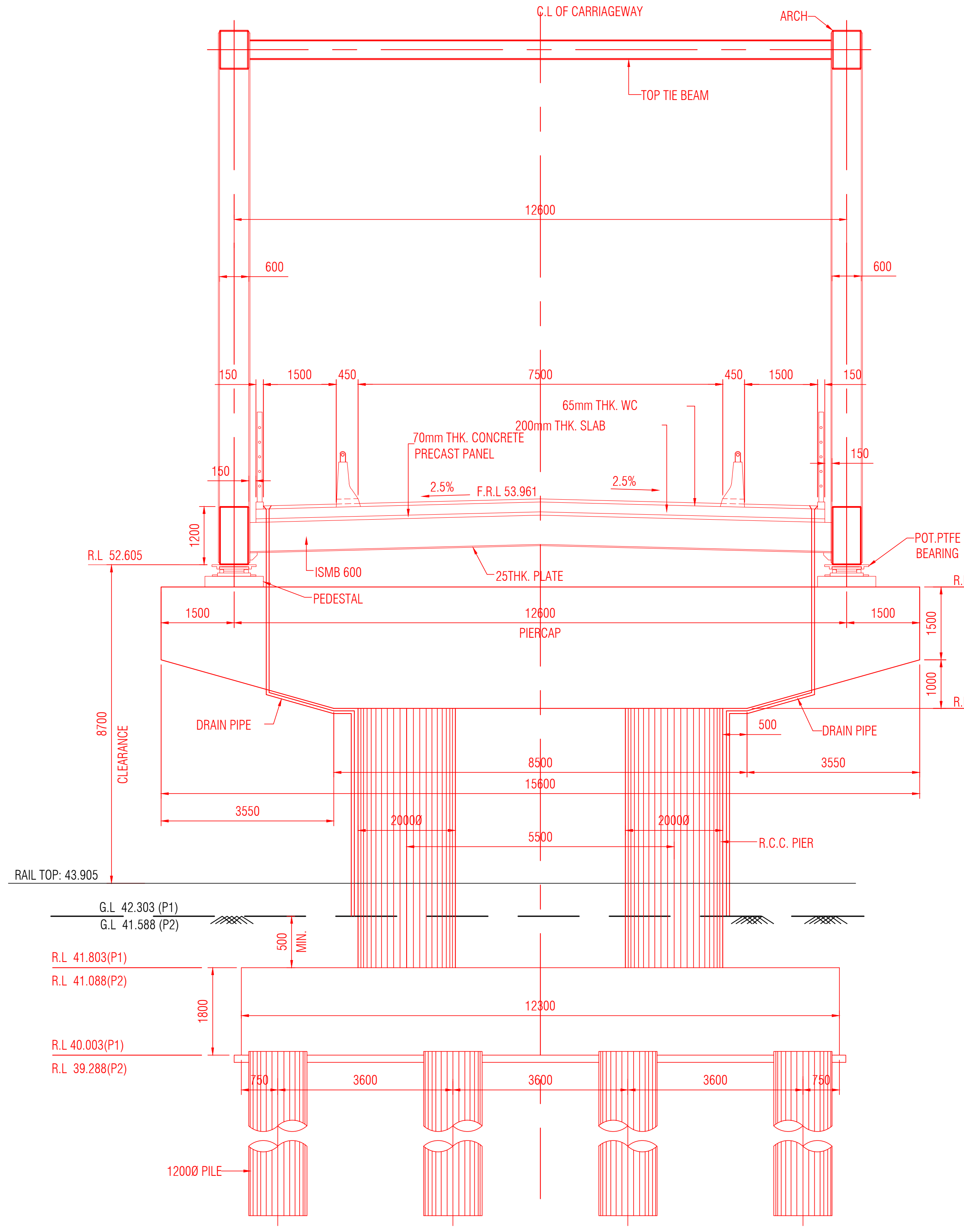
C.L OF CARRIAGEWAY
ARCH
TOP TIE BEAM
65mm THK. WC
200mm THK. SLAB
70mm THK. CONCRETE PRECAST PANEL
F.R.L 53.961
ISMB 600
25THK. PLATE
POT PTFE BEARING
PEDESTAL
R.L 52.605
R.L 52.151
PIERCAP
R.L 49.651
DRAIN PIPE
CLEARANCE
R.C.C. PIER
RAIL TOP: 43.905
G.L 42.303 (P1)
G.L 41.588 (P2)
R.L 41.803(P1)
R.L 41.088(P2)
R.L 40.003(P1)
R.L 39.288(P2)
1200Ø PILE

LONGITUDINAL SECTION OF PIER P1

54.0 m SPAN BOW STRING GIRDER

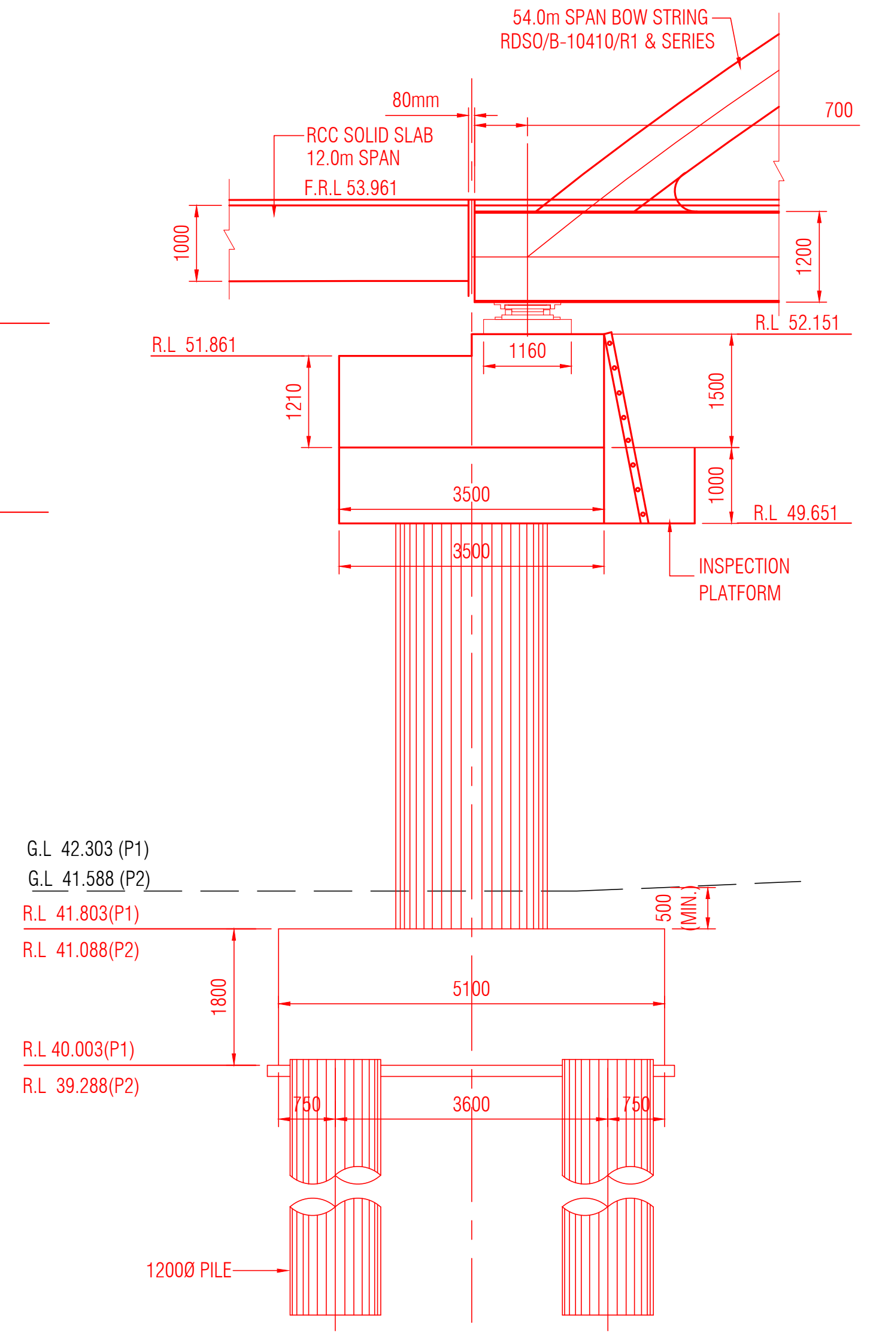
54.0m SPAN BOW STRING RDSO/B-10410/R1 & SERIES
RCC SOLID SLAB 12.0m SPAN
F.R.L 53.961
R.L 51.861
R.L 52.151
R.L 49.651
INSPECTION PLATFORM
G.L 42.303 (P1)
G.L 41.588 (P2)
R.L 41.803(P1)
R.L 41.088(P2)
R.L 40.003(P1)
R.L 39.288(P2)
1200Ø PILE

ELEVATION OF PIER P1 & P2

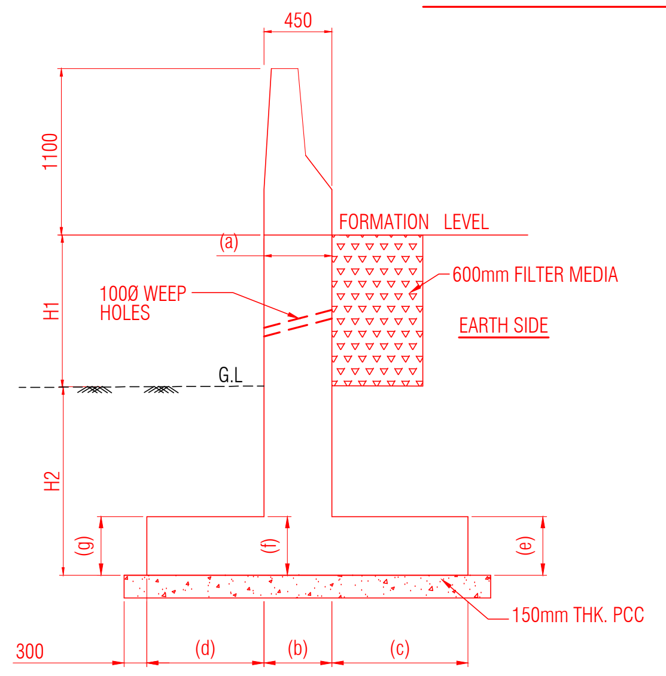
FORMATION LEVEL
600mm FILTER MEDIA
EARTH SIDE
100Ø WEEP HOLES
G.L
150mm THK. PCC

DETAIL OF RETAINING WALL

WITH CRASH BARRIER AT BOTH SIDE

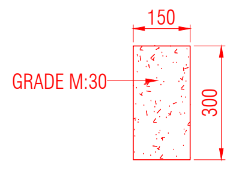

SECTION OF KERB STONE

SCALE:-1:20

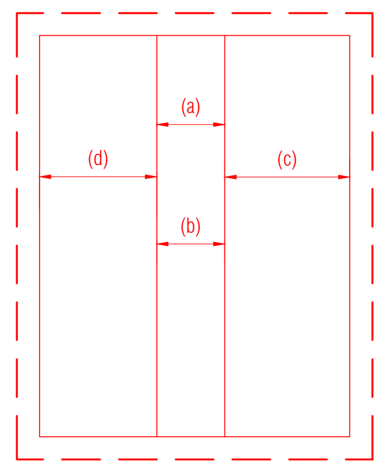

PLAN OF RETAINING WALL

SCALE:-1:50

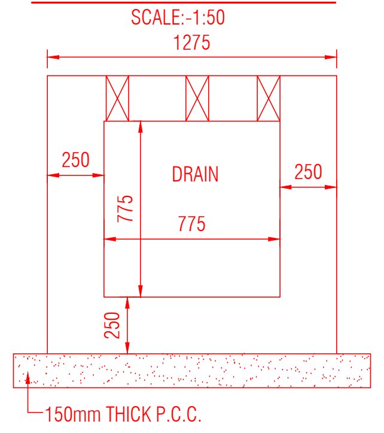
1275
DRAIN
150mm THICK P.C.C.

SECTION OF DRAIN

SCALE:-1:30

CONSULTANT

SUPERINTENDING ENGINEER
GUDC, GANDHINAGAR

CLIENT:- GUJARAT URBAN DEVELOPMENT COMPANY LIMITED
(GUDCL), GANDHINAGAR

NAME OF WORK:-

CONSTRUCTION OF PROP.TWO LANE ROB IN LIEU OF LC NO 34B AT RLY. KM 29/4-29/5 BETWEEN MORBI - NAVLAKHI STATION ON WKT- NLK SECTION ON MORBI - NAVLAKHI ROAD. UNDER SWARNIM JAYANTI MUKHYA MANTRI SAHERI VIKAS YOJANA.

GENERAL ARRANGEMENT DRAWING

TITLE:- CROSS SECTION DETAIL FOR ROB IN LIEU OF LC NO:-34B

LOCATION:- BETWEEN BLOCK STATION : MORBI - BARVARA
NAME OF ROAD : MORBI - NAVLAKHI ROAD

CONSULTANT :-

GEO DESIGNS
& RESEARCH (P) LTD.

B/10, KRISHNA INDUSTRIAL ESTATE,
OPP. B.I.D.C. GORWA ESTATE,
VADODARA - 390 016
TELEFAX : 91-265-2290222,2283081
E-Mail : geo_group@yahoo.com
Web Site : www.geogroup.in

PREPARED BY	TARIQ (CAD.ENGINEER) Tariq	DRG NO.	GDBE_2021-22_011/LC-34B/GAD/03 OF 03	Rev.
DESIGNED BY	FAKHRUDDIN DHILAWALA (Sr.ENGINEER)	DATE	08-06-2026	R0
CHECKED BY	MEHUL PATEL (DESIGN DIRECTOR)	JOB NO.	2021_22_011	

841 x 594

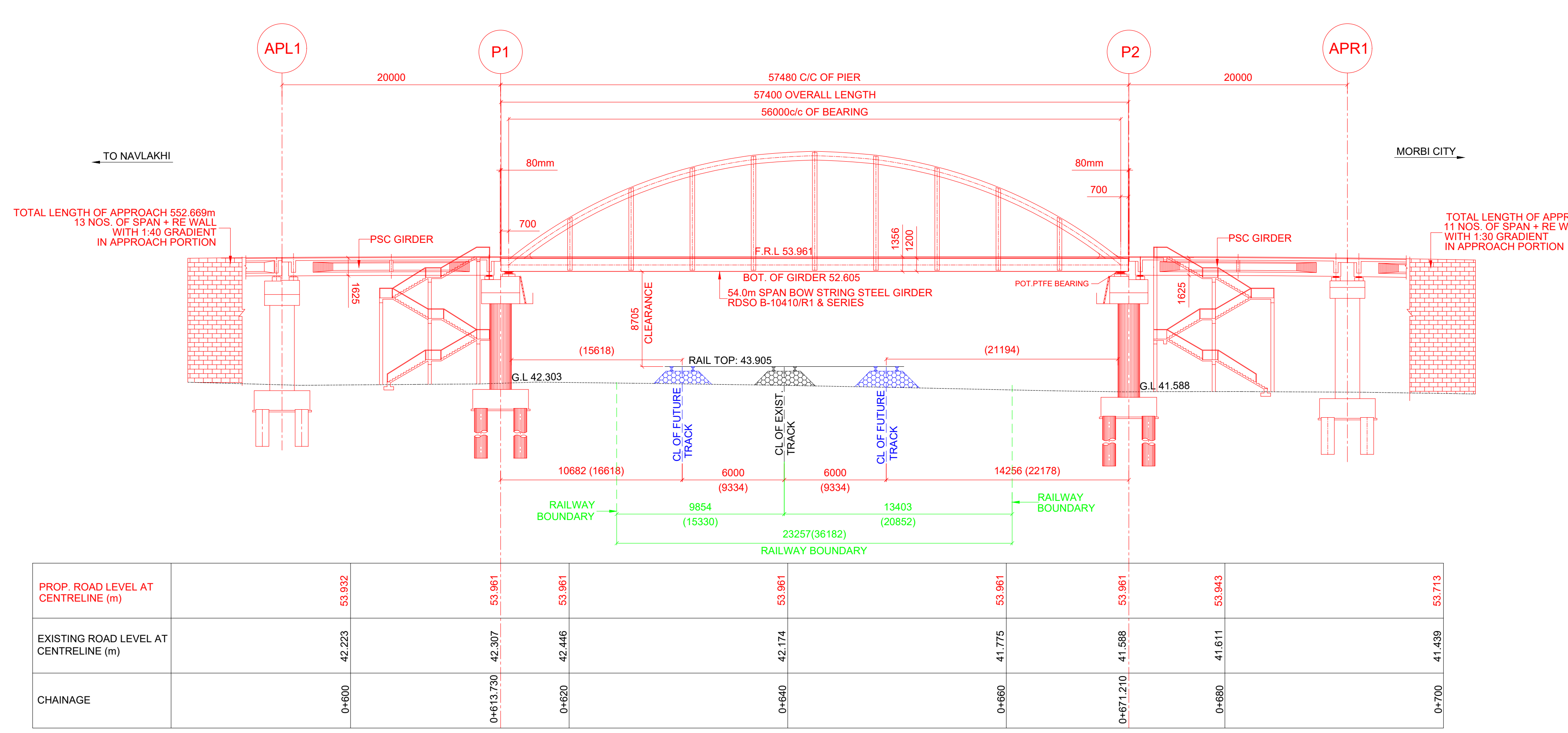

ELEVATION
(SKEW DIMENSIONS ARE SHOWN IN BRACKET)
SCALE 1:300

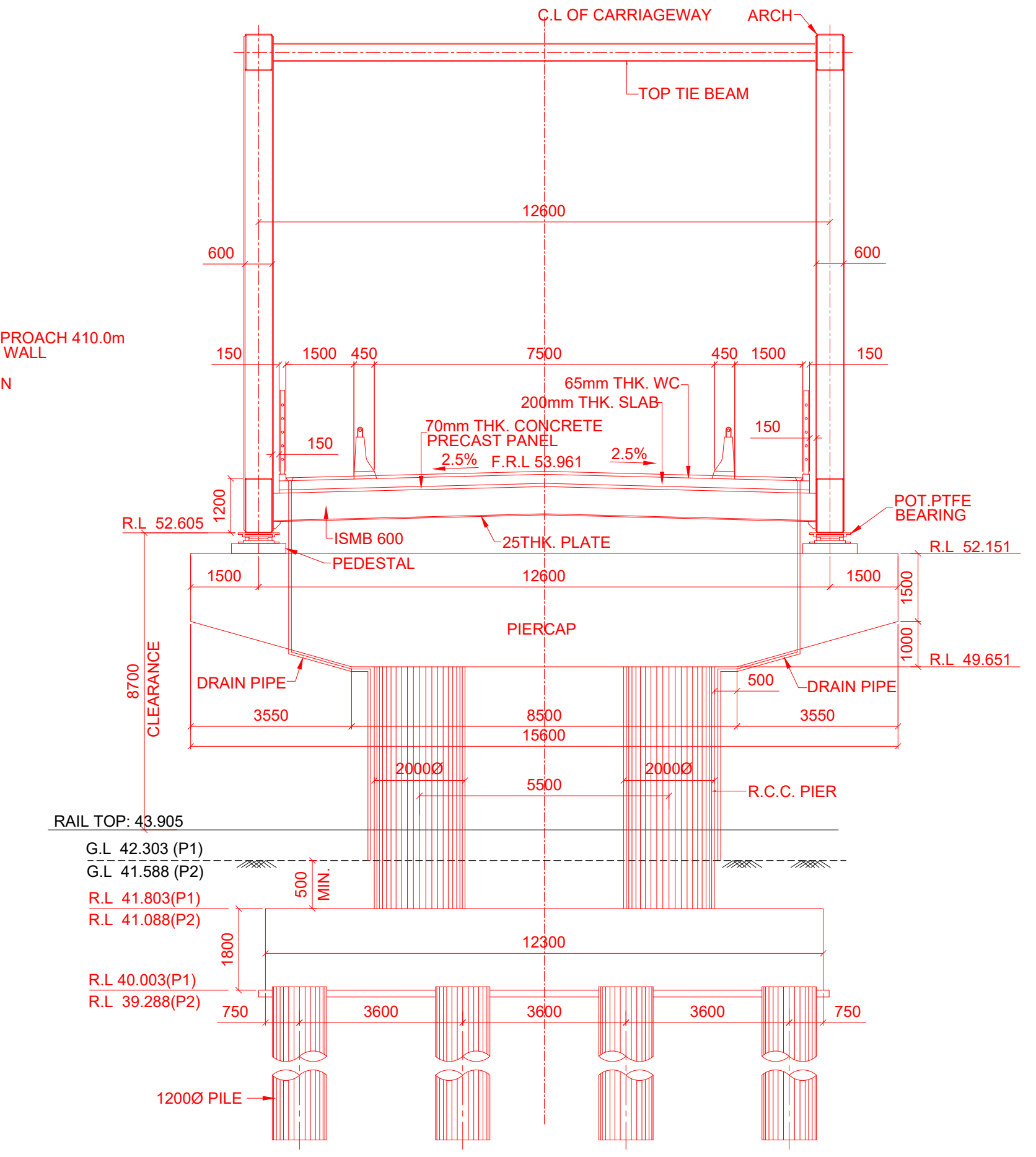

LONGITUDINAL SECTION OF PIER P1
54.0 m SPAN BOW STRING GIRDER
SCALE 1:125

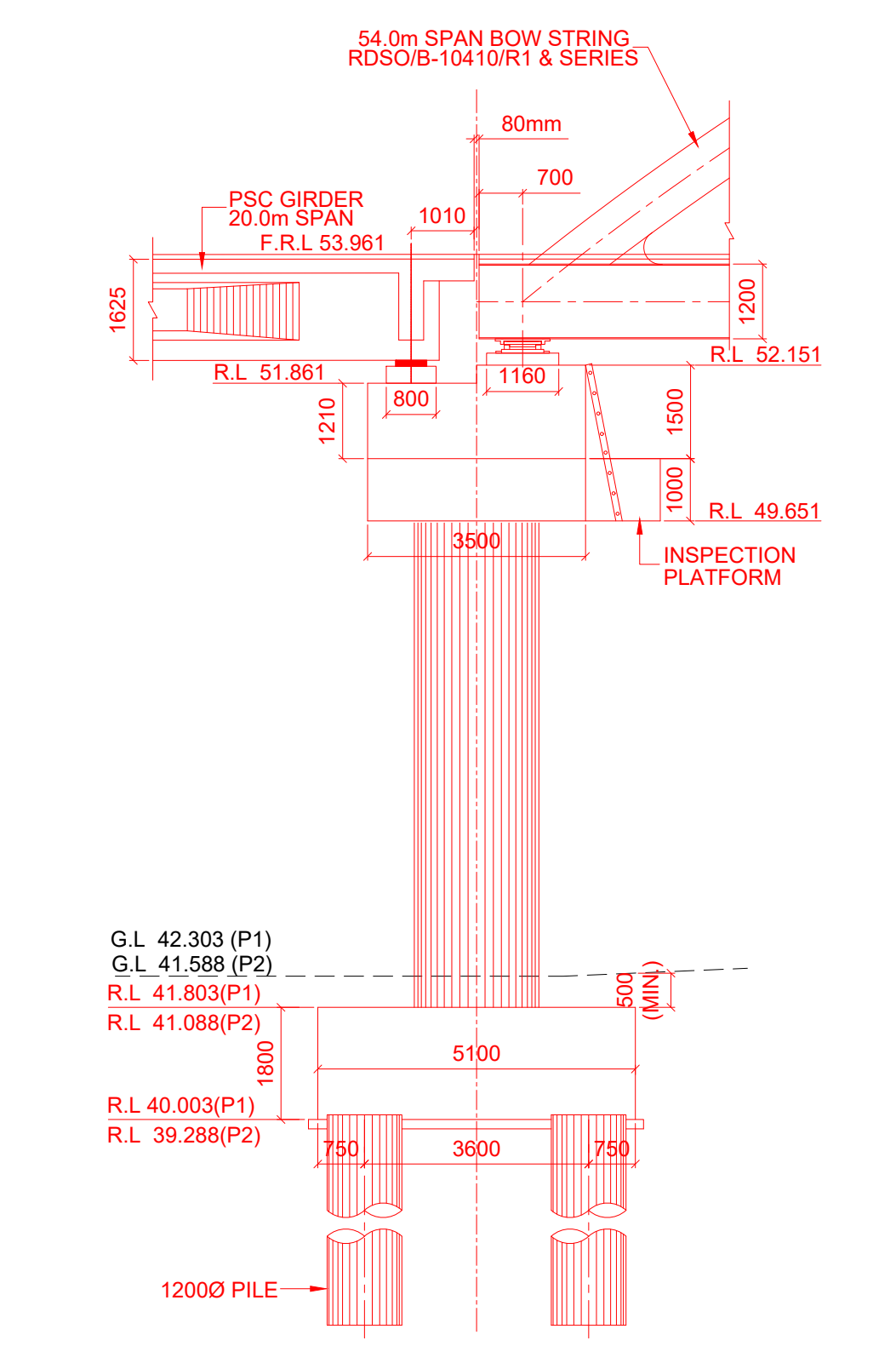

ELEVATION OF PIER P1 & P2
SCALE 1:125

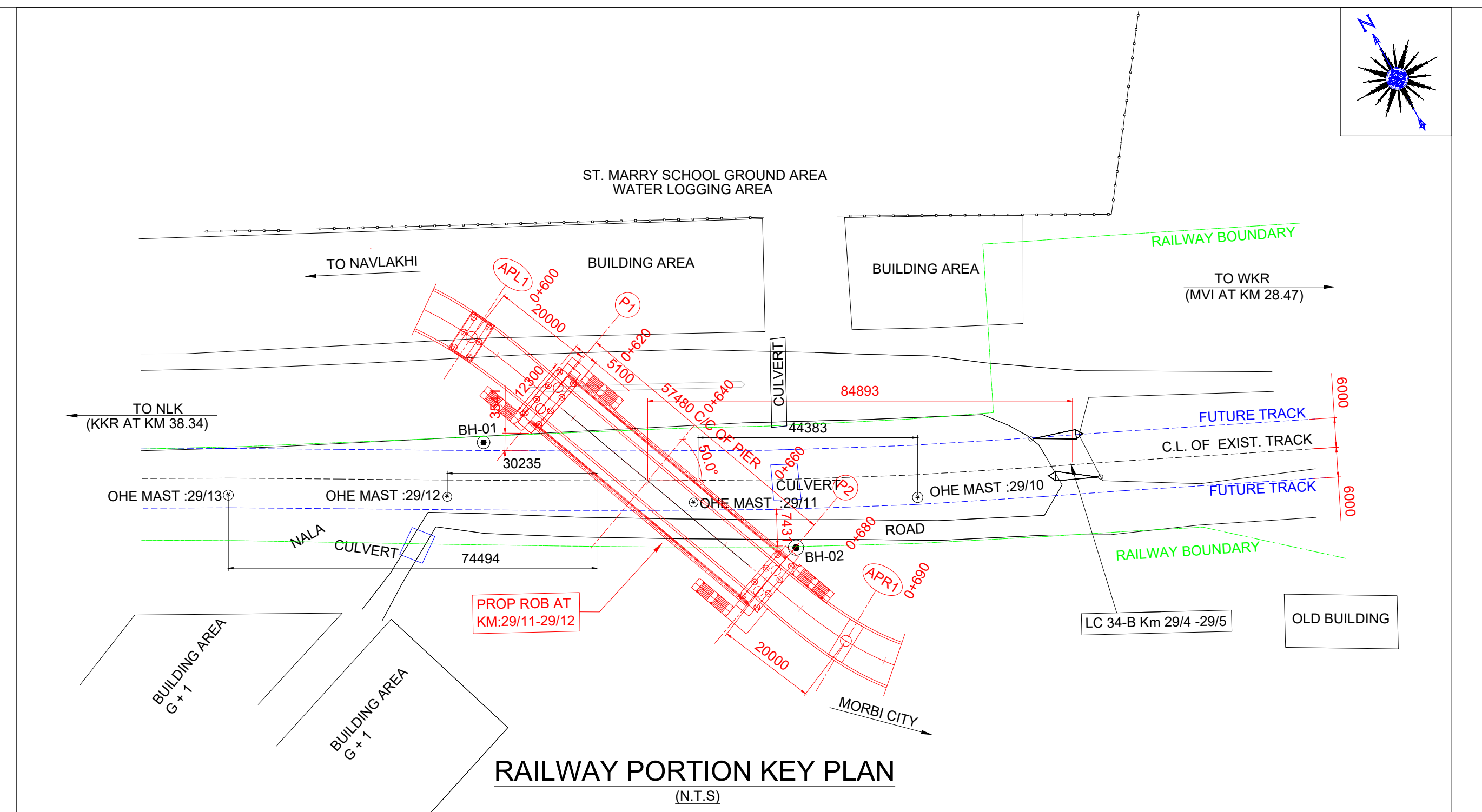

RAILWAY PORTION KEY PLAN
(N.T.S)

FEASBILITY NOTES:

1. CONTAINER MOVEMENT SHOULD NOT BE EFFECTED.
2. PROPOSED ROB FOR ELIMINATION OF LC/34 AT KM. 29/4-5 & 29/5-6 BETWEEN MVI-BRL SECTION.

		LEFT	RIGHT
2.1.	LAND BOUNDARY AT KM 29/4-5.	12.15m.	04.57m.
	AT KM 29/5-6.	11.89m.	01.830m.

2.2. PROPOSED ROB OVER THE MINOR BRIDGE NO-40. AT KM. 29/437 TO 29/442 & WATERWAY TOWARDS LEFT TO RIGHT SIDE.
3. FOR PROPOSED R.O.B. APPROACH ROAD & SERVICE ROAD TOWARDS MORBI-STATION. FOR THAT CONSIDER PROPER MOVEMENT OF ROAD USERS OF NEW RAILWAY COLONY & CMZ-MVZ OFFICE TRAFFIC.
4. OHE MAST 29/11 BWA LOCATION INFRINGE TO BRIDGE NEED TO SHIFT. HTL 697.5. AND HEIGHT OF ROB SHOULD BE 8.7m AS PER DIVISION.
5. LAQ WILL BE REQUIRED IN APPROACH
6. BEFORE EXECUTION WORK INFORM TO SSG/SIG/MVI AND MANUALLY TRENCHING BEFORE EXECUTION OF WORK, FOR CABLE LOCATION.
7. BEFORE EXECUTION OF THIS WORK INFORMATION SHOULD BE GIVEN TO JE/T/MVI.

NOTES FOR DIVERSION

FOR RAILWAY PORTION: EXISTING LC WILL BE USED AS DIVERSION DURING EXECUTION OF ROB.
FOR APPROACH PORTION: 5.5m WIDE SERVICE ROAD SPACE AVAILABLE ON APPROACH PORTION AS SHOWN IN SITE PLAN. SERVICE ROAD USED AS A DIVERSION ROAD DURING EXECUTION OF PROPOSED ROB. AND THE SAME WILL BE UTILIZED AS A PERMANENT SERVICE ROAD AFTER COMPILATION OF WORK.

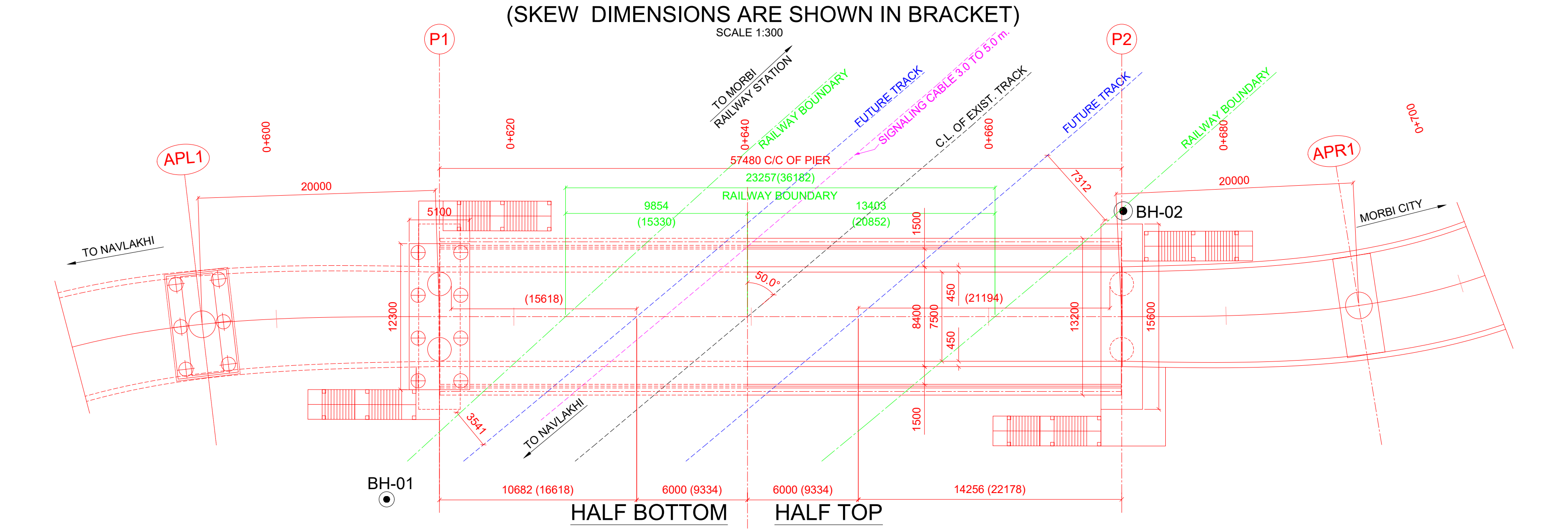

HALF BOTTOM HALF TOP PLAN
SCALE 1:300

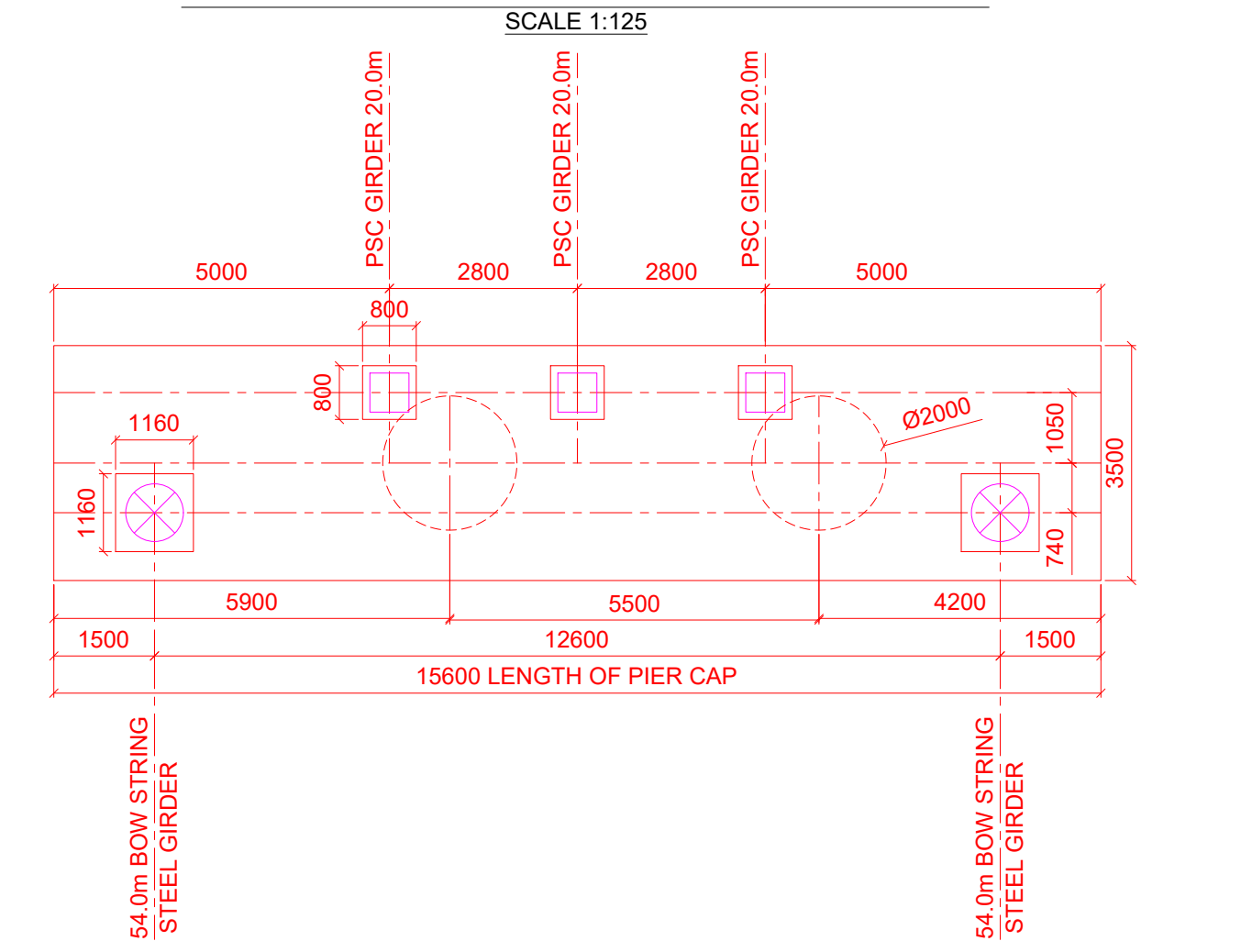

GIRDER ARRANGEMENT FOR PIER " P1 & P2 "
SCALE 1:125

LEGENDS FOR STRUCTURE

STRUCTURE TYPE	CODE SURVEY	SYMBOL
ELECTRIC POLE	EP	†
OHE MAST		⊛
TBM PILLAR	TBM	⊠
BOREHOLE	BH	◉
EXISTING ROAD		═
PROP. RAILWAY ROB		▨
IR TRACK		- - - -
FUTURE TRACK		- - - -
RAILWAY BOUNDARY		— - — -
STRUCTURE		▭
TREE		🌳
GATE		⊠

PIER FOR LEFT PORTION		APL1,APL2...
PIER FOR RIGHT PORTION		APR1,APR2...
RAILWAY PIER		P1,P2...
SERVICE ROAD		▨
COMPOUND WALL		—□—□—
FENCING		—x—x—x—
LIGHT POLE		ſ
LC BOOM		◁—
SIGNAL POST		🚦

TECHNICAL DETAILS

LATITUDE/LONGITUDE	:	22°49'41.34"N , 70°49'22.71"E
GRADE OF ROAD AT APPROACHES	:	1:40 (TO NAVLAKHI) & 1:30 (TO MORBI CITY)
RAIL LEVEL	:	43.905m
FORMATION LEVEL ON APPROACHES	:	53.961m
GROUND LEVEL	:	41.588m(P2)
VERTICAL CLEARANCE	:	8.705m
STANDARD OF LOADING	:	70R AND CLASS A LOADING AS PER IRC-6
TYPE OF SUPER-STRUCTURE	:	BOW STRING STEEL GIRDER
TYPE OF BEARING	:	POT-PTFE BEARING (AS PER RDSO)
TYPE OF SUB-STRUCTURE	:	RCC
TYPE OF FOUNDATION	:	PILE FOUNDATION
SEISMIC ZONE	:	ZONE- IV
WIND ZONE	:	WIND SPEED 50m/s
EXPOSURE CONDITION	:	SEVERE
CLEAR COVER TO REINF.	:	75mm (PILE,PILE CAP)

TBM LIST OF LC-34B MORBI

SRNO.	NORTHING	EASTING	LEVELS	DISCRIPTION
1	2525542.532	687250.242	43.678	TBM
2	2525542.532	687250.242	43.678	TBMS1
3	2525495.76	687321.378	44.141	TBMS2
4	2525244.956	687732.752	45.122	TBMS3
5	2525209.129	687803.504	45.03	TBMS4
6	2525791.313	686836.855	43.327	TBMS5
7	2525901.296	686599.596	43.229	TBMS6
8	2526051.093	686297.079	42.468	TBMS7
9	2526136.177	686092.69	42.631	TBMS8
10	2525701.55	687040.642	43.043	TBMS9
11	2526162.146	686017.171	43.137	TBMT1
12	2525975.398	686421.04	43.343	TBMT2
13	2525677.647	687031.456	44.135	TBMT3

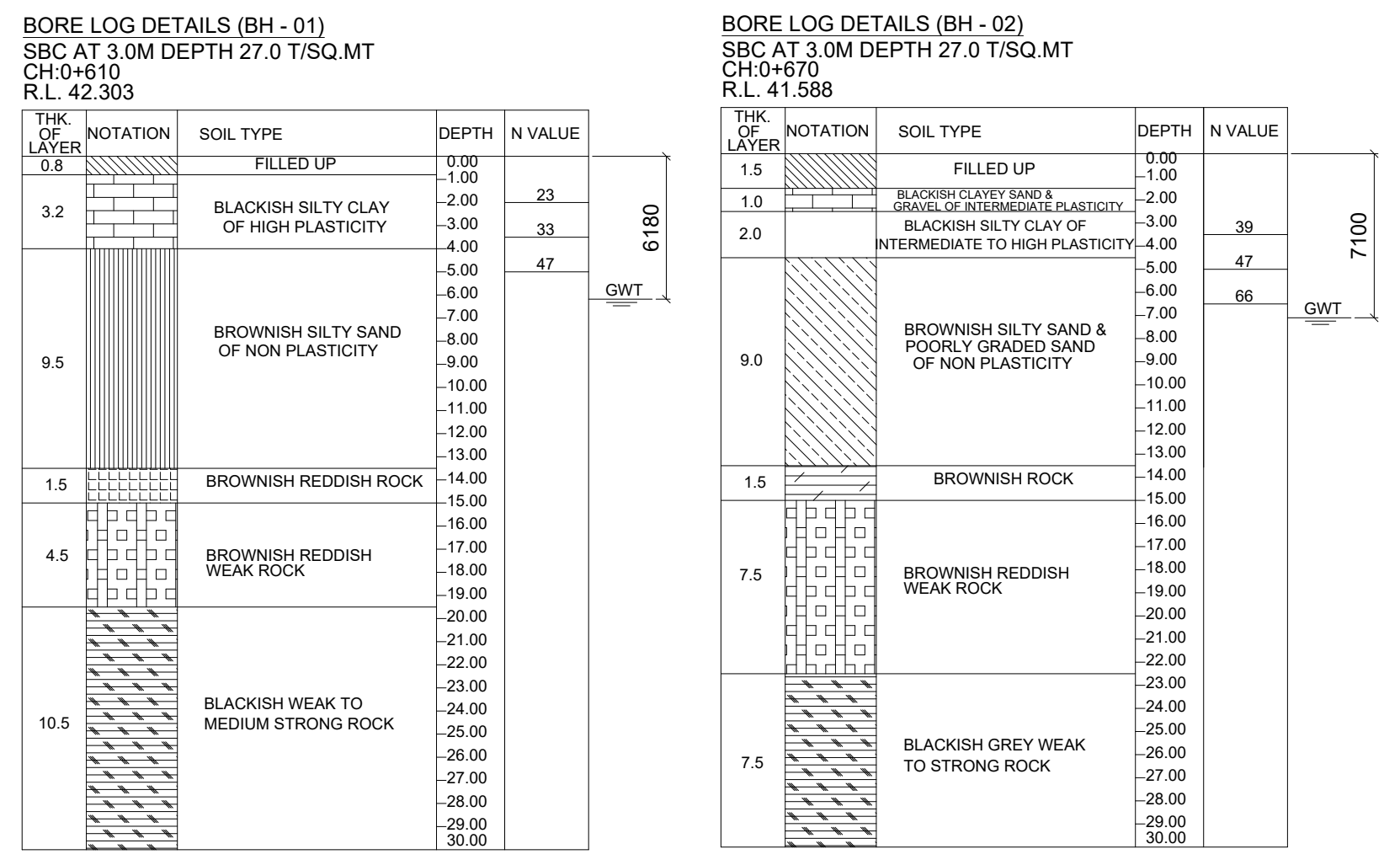
BORE LOG DETAILS (BH - 01)
BORE LOG DETAILS (BH - 02)
SOIL TYPE
DEPTH
N VALUE
FILLED UP
BLACKISH SILTY CLAY OF HIGH PLASTICITY
BROWNISH SILTY SAND OF NON PLASTICITY
BROWNISH REDDISH ROCK
BROWNISH REDDISH WEAK ROCK
BLACKISH WEAK TO MEDIUM STRONG ROCK
BLACKISH GREY WEAK TO STRONG ROCK
GWT

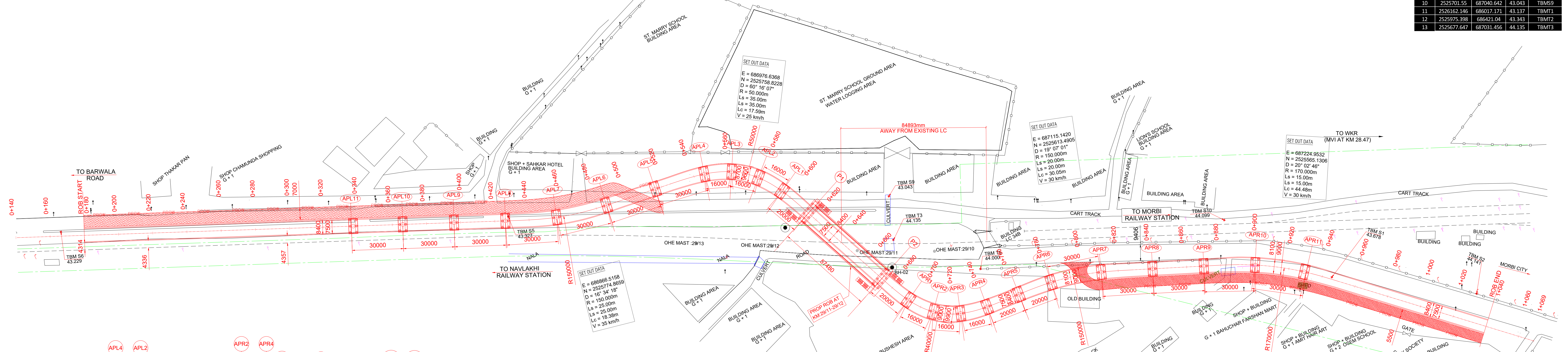

SITE PLAN
(N.T.S)

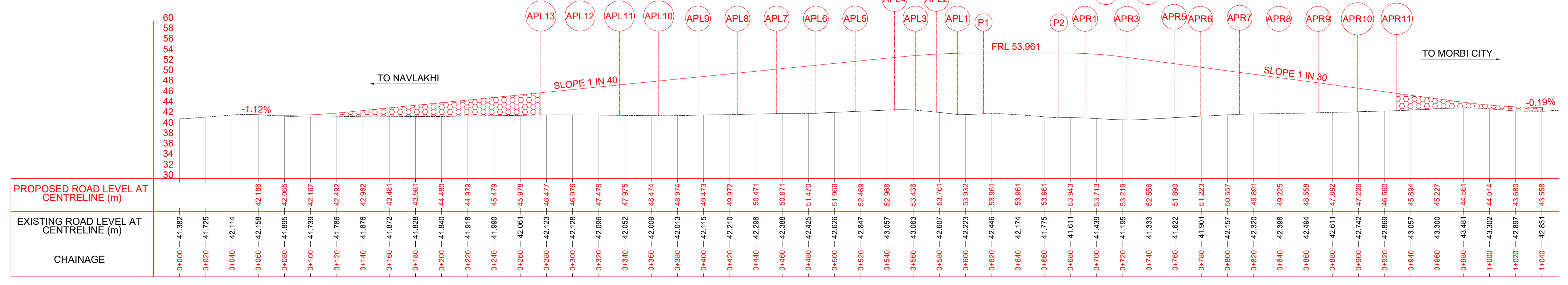

PROFILE (N.T.S)

NOTES:
1. ALL DIMENSIONS ARE IN MILLIMETERS AND LEVELS IN METERS UNLESS WRITTEN OTHERWISE.
2. NO DIMENSIONS SHALL BE SCALED FROM THIS DRAWING ONLY WRITTEN DIMENSIONS SHALL BE FOLLOWED.
3. PROPOSED WORK SHOWN IN RED, ASSETS BEING DISMANTLED/EXISTING SHOWN IN GREEN AND FUTURE WORKS/TRACKS SHOWN IN BLUE.
4. ACTUAL LOCATION OF ROB SHALL BE DECIDED BY ENGINEER-IN-CHARGE IN CONSULTATION WITH ROAD AUTHORITIES AT THE TIME OF ITS CONSTRUCTION.
5. ACTUAL DEPTH OF FOUNDATION SHALL BE DECIDED BY ENGINEER-IN-CHARGE TO SUIT THE SOIL STRATA MET WITH AT THE SITE.
6. VERTICAL CLEARANCE IS CONSIDER 8.705m AS PER GUIDANCE OF RAJKOT DRM OFFICE.
7. GUARD RAIL SHALL BE PROVIDED AS PER STANDARD DRAWING.
8. SHAPES AND SIZE OF GIRDERS, ELASTOMERIC BEARINGS, BEARING PEDESTALS, SHOWN IN THE DRAWING ARE TENTATIVE AND ARE SUBJECT TO CHANGES IN FINAL DESIGN & DRAWING.
9. SHAPES AND DIMENSIONS OF ABUTMENTS, PIERS, PIER, CAP, PIER SHAFT AND PILE, PILE CAP ARE TENTATIVE AND ARE SUBJECT TO CHANGES IN FINAL DESIGN & DRAWING.
10. ANTI CRASH BARRIER SHALL BE PROVIDED AS PER MOST STD.
11. ONLY CONTROLLED CEMENT CONCRETE MIX IS TO BE PROVIDED. GRADE OF CONCRETE FOR MASS CONCRETE AND FOR RCC WORK SHALL NOT BE LEANER THAN M20 AND M25 RESPECTIVELY.
12. WEARING COAT OF THICKNESS 80 mm PROVIDED ROAD SURFACE TO BE MAINTAINED BY ROAD AUTHORITY.
13. A SEPARATE LAUNCHING SCHEME OF SUPERSTRUCTURE HAS TO BE SUBMITTED WHICH WILL BE APPROVED BY CBE BEFORE COMMENCEMENT OF LAUNCHING.
14. EXCAVATION OF ROB WORK SHALL BE DONE ONLY IN PRESENCE OF AUTHORIZED RAILWAY REPRESENTATIVE TO ENSURE THE SAFETY OF RUNNING TRAINS. PROPER PRECAUTIONS SHALL BE TAKEN DURING EXCAVATION NEAR THE EXISTING RAILWAY TRACK IN CASE THE EXCAVATION TO BE DONE NEAR THE TRACK, PROPER SHORING SHALL BE DONE TO PROTECT SLOPE FAILURE OF SOIL.
15. ADDITIONAL LOAD TRANSFERRED FROM FUTURE TRACKS SHALL BE CONSIDERED WHILE DESIGNING OPEN FOUNDATION ON EITHER SIDE.
16. IN ORDER TO OFFER ADEQUATE RESISTANCE AGAINST CORROSION, THE REINFORCEMENT BARS SHALL BE PROVIDED WITH SUITABLE PROTECTIVE COATING DEPENDING UPON THE ENVIRONMENTAL CONDITION AS PER PARA 7.1.5 OF CONCRETE BRIDGE CODE CORRECTION SL.NO.2 DT 26.04.2000.
17. OFFICE FOR RAILWAY ENGINEERS AT SITE OR NEAR BY LOCATION DECIDED BY THE RAILWAY SHALL BE PROVIDED BY SPONSORING ROAD AUTHORITY AND MAINTAINED DURING THE PERIOD OF CONSTRUCTION OF THE PROJECT.
18. DRAWING AND DESIGN OF ROB RAILWAY SPAN SHALL BE PROOF CHECKED BY IIT/NIIT.
19. LONG DURABILITY ANTI CORROSION PROTECTION SHOULD BE APPLIED TO THE STEEL STRUCTURE.
20. INSPECTION LADDER AND PLATFORM FOR INSPECTION OF BEARING SHOULD BE PROVIDED AT EVERY PIER AND ABUTMENTS.
21. ALL TECHNICAL RECORD i.e. CUBE STRENGTH, PRE-STRESSING DETAILS ETC. SHALL BE HANDED OVER TO RAILWAY ENGINEER-IN-CHARGE.
22. BEFORE OPENING OF ROB COMPLETION DRAWING AND COMPLETE COST OF ROB IN HARD COPY AND SOFT COPY DULY APPROVED BY ROAD AUTHORITIES SHALL BE HANDED OVER TO RAILWAY ENGINEER-IN-CHARGE.
23. BEFORE OPENING OF ROB (WITH RAILWAY PORTION) FOR ROAD TRAFFIC, APPROVAL OF RAILWAY ENGINEER IN CHARGE IS TO BE OBTAINED BY ROAD AUTHORITY.
24. MINIMUM GRADE OF CONCRETE :

- RCC PIER M:35
- RCC PIER CAP M:40
- RCC ANTI CRASH BARRIER M:40
- RCC DECK SLAB M:45
- RCC FOUNDATION M:35
- BEARING PEDESTAL M:40

25. STOPPER SHOULD BE PROVIDED AT END ON THE TOP OF PIER/ABUTMENT CAP TO REDUCE POSSIBILITIES OF TOPPING OF GIRDER DURING LAUNCHING OF GIRDER.
26. PCE SANCTION SHALL BE OBTAINED BEFORE COMMENCEMENT OF WORK.
27. THE BRIDGE SHALL BE DESIGNED FOR 2 LANES OF IRC CLASS "A" LOADING OR 2 LANE OF CLASS 70R LOADING ALONG WITH FOOTPATH LOADING WITH WORST COMBINATION, FOOTPATH LOADING SHALL BE CONSIDERED AS PER IRC-6, 2017.
28. AS PER RAILWAY LETTER NO.2007/RE/161/5-FTS-774 DATED 12.10.2011 TRACK LEVEL SHOULD BE FROZEN.
29. THE COST OF MODIFICATION OF OHE TO BE CHARGEABLE TO ESTIMATE.
30. DIMENSIONS OF ALL STRUCTURAL MEMBERS i.e. PILE, PILE CAP, PIER, ABUTMENT, PIER CAP ETC. SHOWN ARE TENTATIVE AND SHALL BE AS PER STRUCTURAL DESIGN AND DRAWING SUBMITTED BY CONSULTANT/PARTY AND APPROVED BY RAILWAY.
31. STRUCTURAL STEEL OF COMPOSITE GIRDERS CONFIRM TO IS: 2062-2011 E 350W B0 OTHERWISE SPECIFIED IN STANDARD DRG..
32. FOR STEEL COMPOSITE GIRDER REFER RDSO B-10410/R1 & SERIES.
33. ROAD TRAFFIC SHALL BE DIVERTED AT SUITABLE LOCATION IN CONSULTATION WITH ROAD AUTHORITY.
34. EXISTING LC WILL BE CLOSED AFTER COMPLETION OF ROB WORK.
35. THE QAP BEARING AS PER RDSO FORMAT (CIRCULATED BY RDSO VIDE LETTER NO. CBS/PBEJ/reg. DATED 16.05.2014) SHALL BE ENSURED BY INSPECTING ENGINEER.
36. CONSENT LETTER FROM DISTRICT COLLECTOR -............... FOR CLOSING OF LEVEL CROSSING NO..................HAS BEEN OBTAINED VIDE LETTER NO....................
37. LONGITUDINAL SLOPE 1 IN 1000 OR SUITABLE TO PROVIDED ON BRIDGE PROPER IN RLY LAND AND SHALL BE ADJUSTED IN DEPTH OF PEDESTAL.
38. THE DESIGN OF APPROACHES ARE TO BE APPROVED BY ROAD AUTHORITY,THE FINAL DECISION FOR TYPE OF FOUNDATION REST WITH THEM AND IS TO BE DECIDED BY THEM.
39. THE STEEL GIRDERS SHALL BE FABRICATED AND INSPECTED BY INSPECTION CELL OF RAILWAY OR THIRD PARTY INSPECTION AGENCY LIKE RITES/WR1, OR CEIL AS ADVISED IN RAILWAY BOARD'S LETTER NO:
    (a) 2016/54/CE-III/BR/RDSO MISC. DATED 15/07/2019.
    (b) 2017/16/CE-III/BR GIRDER INSPECTION DATED 24/07/2019.
40. WHILE CARRYING OUT THE WORK PRECAUTION SHALL BE TAKEN TO PREVENT DAMAGE TO S&T CABLE GEARS AND IF SHIFTING / PROTECTION ARRANGEMENT REQUIRED. IT WILL BE DONE BY PARTY IN PRESENT OF S&T SUPERVISION.
41. IF S&T CABLES SHIFTING REQUIRES, NO WORK WILL START WITHIN RAILWAY BOUNDARY WITHOUT SHIFTING S&T CABLE AND THIS WILL BE DONE IN PRESENCE OF S&T SUPERVISION.
42. IF S&T CABLES REQUIRED TO SHIFT, THE TEMPORARY AND PERMANENT SHIFTING CABLE CANT BE DONE DEPARTMENTALLY SO THE WHOLE WORK SUCH AS TRANSPORTATION OF CABLE / SHAFT, TRENCHING LAYING AND JOINT TO BE CONE BY EXECUTING AGENCY FOR THE WORK AND IT IS INCLUDED IN TENDER.
43. THE SHIFTED S&T CABLE TO BE PROTECTED BY EXECUTED AGENCY TILL THE CABLE IS NOT REVOKED LOCATION PERMANENTLY.
44. THE GAD WILL NEED TO BE REVALIDATED TO MATCH PREVAILING GROUND CONDITIONS, IF THE WORK IS NOT COMMENCED WITH IN TWO YEARS OF THE COMMENCEMENT.
45. PROVISION OF CLAMPS IN THE SUPERSTRUCTURE FOR A.C. TRACTION WIRE TO BE MADE IN CONSULTATION WITH THE CONCERNED AUTHORITIES.
46. REPRESENTATION OF TELECOM AND SIGNALING DEPT. SHALL BE MADE AVAILABLE BEFORE COMMENCEMENT OF PROPOSED WORK IN THE VICINITY OF SIGNAL AND TELECOM CABLE.
47. SUITABLE SPEED RESTRICTION SHALL BE IMPOSED BY ENGINEER IN CHARGE DURING THE EXECUTION WORK.TEMP ENGINEERING INDICATORS WILL BE PROVIDED AS PER G.R 15.09(2)b+ S.P 15.09 (2).
48. PROTECTIVE SCREENS TO BE PROVIDED FOR EACH TRACK DURING EXECUTION OF SUPERSTRUCTURE.
49. (a) THE STEEL GIRDER SHALL BE FABRICATED AND INSPECTED BY INSPECTION CELL OF RAILWAY OR THIRD PARTY INSPECTION AGENCY LIKE RITES, WRI OR CEIL AS ADVISED BY RAILWAY BOARD'S LETTER.
    (i) NO. 2017/16/CE-III/BR. GIRDER INSPECTION DATE 24/07/2019
    (ii) NO. 2016/54/CE-III/BR./ RDSO MISC. DATED 15/7/2019
    (iii) THE GAD WILL NEED TO BE REVALIDATED FOR MATCH PREVAILING GROUND CONDITIONS. IF THE WORK IS NOT COMMENCED WITHIN 2 YEARS OF COMMENCEMENT.
51. GIRDER SHOULD BE FABRICATED AS PER THE EXTANT RULES AND ONLY AFTER THE REQUIRED INSPECTIONS BY RAILWAYS IS DONE .
52. IT SHOULD BE INFORM TO ADEN-RJT & SSE-PWAY-MVI WELL IN ADVANCE BEFORE STARTING THE WORK (MINIMUM 3 DAYS AGO).
53. INFORMATION TO BE GIVEN TO SSE-EL-WKR IN ADVANCE BEFORE START OF WORK.
54. PRIOR COMMENCING THE WORK SITE ENGINEER TO ENSURE THAT SBC OF SOIL IS HIGHER THAN ACTUAL FOUNDATION PRESSURE.
55. SAFETY OF THE TRACK SHALL BE ENSURED BY SITE ENGINEER FOR ALL THE TIME .
56. SKEW ANGLE NOT MORE THAN 25.250° FOR SUPER STRUCTURE.
57. S & T SUB ESTIMATE TO BE INCORPORATE FOR SHIFTING OF CABLE AND OTHER EQUIPMENT, EI ALTERATION FOR CLOSING OF EXISTING LC No.34.
58. BOUNDARY WALL TO BE CONSTRUCTED 100 M ON EITHER SIDE OF ROB SIDE ON DEPOSIT BASIS.
59. FOR OHE MODIFICATION, SUB ESTIMATE TO BE INCORPORATED.
60. FOR CROSSING OF VARIOUS TYPE OF CABLES LIKE ELECTRICAL, SIGNALING, OFC Etc. 300 mm DIA. HUME PIPE TO BE LAID BY PUSH THROUGH METHOD UNDER THE TRACK, 3.0 m. BELOW THE GROUND LEVEL ON BOTH SIDE OF PROPOSED ROB ON DEPOSIT BASIS.

DEPOSIT WORK

57. FOR QUALITY AUDIT AND ENDEPEND THIRD PARTY SHALL BE ANGAGE WITH PRIOR APPROVAL OF CBE WHO WILL BE SUBMIT PERIODIC REPORT TO CBE FOR ACCEPTANCE.
58. POT CUM PTFE BEARING SHALL BE PROVIDED.
59. UNTENSIONED REINFORCEMENT SHALL BE T.M.T.
60. THE EXPANSION JOINTS MUST BE ROBUST , DURABLE, WATER TIGHT AND TMT BARS OF GRADE FE -500 CONFIRMING IS 1786 STANDARD. REPLACEBLE IT MUST BE PROVIDE IN FULL WIDTH SUPER STRUCTURE INCLUDING KERB AND FOOT PATH FOLLOWING.THE PROFILE OF THE SAME (WHERE RELAVANT) STRIP SEAL EXPANSION JOINTS SHALL BE PROVIDED AND OBTAINED ONLY.
61. DESIGN OF COMPOSITE SUPER STRUCTURE SHALL CONFIRM IRC 22:2015.
62. NO CONSTRUCTION JOINTS SHALL BE NORMALLY ALLOWED IN CONCRETE WITHOUT SPECIAL PRECAUTION AS PER RELEVANT IRC CODE.
63. FOR DETAILS OF STAGING, FORM WORK AND PHASE WORK DRAWING FOR FABRICATING GIRDER AND CASTING DECK SLAB ETC. OVER RAILWAY TRACK REFER SEPARATE DRAWING SUBMITTED BY CONTRACTOR AND APPROVED BY RLY.
64. FALSE FLOOR SHALL BE PROVIDED DURING CASTING OF SUPER STRUCTURE SPAN TO AVOID CONSTRUCTION MATERIAL, EQUIPMENT ETC FALLING ON TRACK .
65. DESIGNS ARE CARRIED OUT SEVER EXPOSURE.
66. SUITABLE JACKING POINTS SHALL BE PROVIDED FOR LIFTING OF SUPER STRUCTURE FOR INSPECTION / REPAIRED OF BEARING.
67. WORK SHALL BE EXECUTED IN ACCORDANCE WITH MORTH & H SPECIFICATIONS FOR ROAD AND BRIDGE WORKS EXCEPT WHEREVER OTHERWISE MENTIONED IN RAILWAY SPECIFICATION FOR MATERIALS AND WORKS.
68. ALL THE PREFABRICATED STEEL GIRDERS SHOULD BE LAUNCH WITH SUITABLE LAUNCHING SYSTEM AS PER SITE REQUIREMENT WITH THE APPROVAL OF RLY. AND CRS SANCTION.
69. ALL THE DIMENSION SHOWN SHOULD BE VERIFIED AT SITE BEFORE TAKING UP DESIGN WORK IN HAND ANY DISCREPANCY NOTED SHOULD BE FORWARDED THROUGH ALTERATION DULY SIGNED.
70. THE QAP BEARING AS PER RDSO FORMAT (CIRCULATED BY RDSO VIDE LETTER NO.CBS/PBEJ/REG. DATED 16-10-2014) SHALL BE ENSURED BY INSPECTING ENGINEER.
71. FOLLOWING CODES SHALL BE ADOPTED FOR DESIGN
    IRC:24-2010
    IRC:5-2015
    IRC:112-2011
    IRC:6-2016
    IRC:83-2014 (ALL PART)
    IRC:22-2015
    IRC:78-2014

SIGNALLING NOTES:-
1. PRIOR INFORMATION WILL BE GIVEN TO SSE(SIG)HAPA & SSE(TELE)HAPA FOR THE PROTECTION OF THE CABLES.
2. THE UNDER GROUND CABLES ETC. SHALL BE REMOVED AND REALIGNED PRIOR COMMENCING THE WORK.
3. AS PER RAILWAY BOARD 'S LETTER No.2003/TELE/RCIL/1/PART IX DT.04-05-07 CIRCULATED BY CSTE - CCG'S LETTER No.SG/245/7 VOL-III DT.14-05-07 FLAT PENALTY OF 1 LAKH RUPEES WILL BE IMPOSED AND F.I.R WILL BE LODGED AS PER R.P.F. ACT,IF CABLE DEMAGED.FURTHER ,AS PER DY.CSTE(TELE) CCG'S LETTER NO.56/245/7/2 DATED 13.05.2013 RS. 50000/- TOWARDS RESTORATION CHARGES WILL ALSO BE IMPOSED.(REFER TELE.CIR.No.17/2013).
4. WRITTEN INFORMATION TO BE GIVEN TO TEST ROOM RJT 3 DAYS IN ADVANCE ON PHONE No.9724094840. BEFORE STARTING THE WORK, SSE(SIG)RJT & SSE(TELE)RJT ON PHONE No.2440646 ALSO BE INFORMED.TO VERIFY THE SITE TO PREVENT DAMAGE OF S & T CABLE, JE (SIG) MVI ON MOB. NO. 9724094841 & JE (TELE) MVI ON M.O. NO. 9724094832 & RAILTEL ON M.O. NO. 9974151509 SHOULD ALSO BE INFORMED. IF THE WORK IS DONE WITHOUT INFORMATION TO S & T STAFF AND CABLE WILL DAMAGED IN THIS CASE, F.I.R. WILL BE LODGE AS PER RPF ACT.
5. SIGNALING AND TELECOM CABLE IS PASSING ALONG THE TRACK. PREVENTIVE MEASURES WILL BE TAKEN WHILE EXECUTING THE WORKS. WRITTEN INFORMATION TO BE GIVEN TO SSE(SIG)RJT & SSE(TELE)RJT WELL IN ADVANCE.WORK WILL BE CARRIED OUT IN THE PRESENCE OF REPRESENTATIVE OF S&T DEPTT. DEPTH AND SIDE OF S&T CABLE TO BE ENSURED BEFORE EXECUTION OF WORK.

METHODOLOGY OF WORKING

1. MODUS OPERANDI / METHODOLOGY CONSTRUCTION ACTIVITY, SAFETY PRECAUTION AND MEASURES TO BE OBESERVED DURING CONSTRUCTION OF ROB SHOULD BE IN ACCORDANCE OF IRPWM AND BOARDS LETTER NO. 97/CE / 1/ BRO / 158 / 9 (POLICY) PT. LL DATED 16-07-2009.
2. FABRICATED STEEL GIRDER WILL BE LAUNCHING FIRST THEN RCC DECK SLAB WILL BE CASTED IN SITU AFTER PROVIDING TEMPORARY ARRANGEMENT.
3. CASTING / FABRICATING OF GIRDER AND DECK SLAB WILL BE EXECUTED UNDER SPEED RESTRICTION OF 30 KMPH.
4. WORK UNDER TRAFFIC BLOCK SHALL BE CARRIED OUT UNDER THE PROVISION OF BANNER FLAG AND PROTECTION OF ENGG.FLAG MAN.
5. INSTRUCTION ON " SPECIAL CONDITION OF WORKING OF ROAD CRAINS" AS PER RAILWAY BOARDS LATEST GUIDELINE IN LETTER NO. 2015/CE-4/RUB -206 DATED 15-02-2016 SHALL BE FOLLOWED.

ATVU = 32322 FEB 2020

WESTERN RAILWAY
RAJKOT DIVISION | WKR-NLK SECTION

PROPOSED 2 LANE ROB IN LIEU OF LC NO 34B CH.29/4-5 BETWEEN MORBI - BARVALA ROAD STATION WORK SANCTION BY VICE PRESIDENT (PROJECT) GUDC ON DEPOSIT WORK BASIS.

SCALE : AS SHOWN

SIGNATURE BLOCK

CBE-CCG	AMIT GUPTA Digitally signed by AMIT GUPTA Date: 2023.06.16 17:42:08 +05'30'
DYCE-DESIGN-CCG	HIMANSHU SHARMA Digitally signed by HIMANSHU SHARMA Date: 2023.06.14 14:59:11 +05'30'
AXEN-DESIGN-CCG	NAND KISHOR CHAUDHARY Digitally signed by NAND KISHOR CHAUDHARY Date: 2023.06.13 18:19:12 +05'30'
DRM-RJT	ANIL KUMAR JAIN DIGITALLY SIGNED BY ANIL KUMAR JAIN DATE:2023.04.24 10:49:11 +05'30'
SRDEN-CO-RJT	INDERJEET SINGH DIGITALLY SIGNED BY INDERJEET SINGH DATE:2023.04.21 17:27:48 +05'30'
SRDSTE-RJT	HARI SHANKAR ARYA DIGITALLY SIGNED BY HARI SHANKAR ARYA DATE:2023.03.14 13:27:21 +05'30'
SRDEE-RJT	ARJUN ASHVINKUMAR SHROFF DIGITALLY SIGNED BY ARJUN ASHVINKUMAR SHROFF DATE:2023.03.10 13:08:28 +05'30'
SRDEE-TRD-RJT	MEETHA LAL MEENA DIGITALLY SIGNED BY MEETHA LAL MEENA DATE:2023.03.23 11:24:01 +05'30'
SRDOM-RJT	RAMESH CHAND MEENA DIGITALLY SIGNED BY RAMESH CHAND MEENA DATE:2023.03.14 16:04:55 +05'30'
DEN-EAST-RJT	PALASH PAGARIA DIGITALLY SIGNED BY PALASH PAGARIA DATE:2023.04.13 12:34:58 +05'30'
ADEN-RJT	KIRITKUMAR MOHANLAL PARMAR DIGITALLY SIGNED BY KIRITKUMAR MOHANLAL PARMAR DATE:2023.03.10 12:26:16 +05'30'
SSE-PWAY-MVI	BHARGAV HASMUKHRAI JOSHI SIGNED BY BHARGAV HASMUKHRAI JOSHI DATE:2023.03.10 12:37:18 +05'30'
SSE-WORKS-MVI	SHRAVAN KUMAR DHRUW SIGNED BY SHRAVAN KUMAR DHRUW DATE:2023.03.10 12:51:13 +05'30'
SSE-SIG-RJT	DEVASHISH HIRANMOY CHOUDHARY SIGNED BY DEVASHISH HIRANMOY CHOUDHARY DATE:2023.03.13 16:37:39 +05'30'
TI-MVI	LAKHENDRA PRASAD YADAV SIGNED BY LAKHENDRA PRASAD YADAV DATE:2023.03.15 17:53:22 +05'30'
SSE-DRG-I-RJT	DILIPKUMAR SHANKERLAL CHAUHAN SIGNED BY DILIPKUMAR SHANKERLAL CHAUHAN DATE:2023.03.09 10:59:14 +05'30'

JE-DRG-II-CCG

G'NAGAR

SUPERINTENDING ENGINEER
GUDCL GANDHINAGAR
CLIENT:

GEO DESIGNS & RESEARCH (P) LTD.
DRG. SUBMITTED BY:

DRG. NO.- DRM/RJT/8398

P.C.E. NO.- e-30927-DRM/5-D

TO NAVLAKHI ROAD
DESIGN SPEED = 30 km/h
STA 0+000.00
SET OUT DATA
E = 686652.7516
N = 2525673.9126
D = 1° 07' 24"
R = 1000.000m
Lc = 19.60m
V = 30 km/h
TO NAVLAKHI RAILWAY STATION
SET OUT DATA
E = 686989.6148
N = 2525725.7792
D = 44° 49' 13"
R = 33.000m
Lc = 25.81m
V = 20 km/h
ST. MARRY SCHOOL GROUND AREA
WATER LOGGING AREA
GATE
COMPOUND WALL
CULVERT
BH-1
SET OUT DATA
E = 687115.1841
N = 2525613.4719
D = 19° 05' 30"
R = 150.000m
Ls = 20.00m
Ls = 20.00m
Lc = 29.98m
V = 30 km/h
TO MORBI RAILWAY STATION
SET OUT DATA
E = 687224.9532
N = 2525565.1306
D = 20° 02' 46"
R = 170.000m
Ls = 15.00m
Ls = 15.00m
Lc = 44.48m
V = 30 km/h
SET OUT DATA
E = 687031.0197
N = 2525620.3568
D = 63° 52' 51"
R = 40.000m
Ls = 30.00m
Lc = 14.60m
V = 20 km/h
CART TRACK
BUILDING AREA
LION'S SCHOOL BUILDING AREA
BH-2
MORBI CITY
APL1 APL2 APL3 APL4 APL5 APL6 APL7 APL8 APL9 APL10 APL11 APL12 APL13
P1 P2
APR1 APR2 APR3 APR4 APR5 APR6 APR7 APR8 APR9 APR10 APR11 APR12 APR13
20

LEGENDS FOR STRUCTURE

STRUCTURE TYPE	CODE SURVEY	SYMBOL
ELECTRIC POLE	EP	┬
OHE MAST		⊛
TBM PILLAR	TBM	⊠
BOREHOLE	BH	◉
EXISTING ROAD		═
PROP. RAILWAY ROB		▭
IR TRACK		┼┼┼┼
FUTURE TRACK		┼┼┼┼
RAILWAY BOUNDARY		— - —
LEVEL CROSSING GATE	LC	o◁▷
STRUCTURE		▭
TREE		♣
POLE		╭
EXISTING ROW	ROW	—ROW—
PROPOSED ROW	PROW	—PROW—

PIER FOR LEFT PORTION		APL1,APL2...
PIER FOR RIGHT PORTION		APR1,APR2...
RAILWAY PIER		P1,P2...
SERVICE ROAD		▨
COMPOUND WALL		—
FENCING		—o—o—
TRAFFIC SIGNAL		🚦
ELECTRIC BOX		⚡

TBM LIST OF LC-34B MORBI

SRNO.	NORTHING	EASTING	LEVELS	DISCRIPTION
1	2525542.532	687250.242	43.678	TBMS1
2	2525495.76	687321.378	44.141	TBMS2
3	2525791.313	686836.855	43.327	TBMS5
4	2525901.296	686599.596	43.229	TBMS6
5	2526051.093	686297.079	42.468	TBMS7
6	2525701.55	687040.642	43.043	TBMS9
7	2525600.693	687209.214	44.099	TBMS10
8	2525975.398	686421.04	43.343	TBMT2
9	2525677.647	687031.456	44.135	TBMT3
10	2525639.487	687069.272	44.000	TBMT5

PLAN
SCALE 1:1000

SUMMARY TABLE

LATITUDE/LONGITUDE	22°49'41.34"N , 70°49'22.71"E		
GRADE OF ROAD AT APPROACHES	1:30 (TO NAVLAKHIROAD), 1:30 (MORBI CITY)		
FORMATION LEVEL ON APPROACHES	53.961m		
LC 34B	APPROACH PORTION (TO NAVLAKHI ROAD)	RAILWAY PORTION	APPROACH PORTION (MORBI CITY)
SKEW ANGLE	-	51° FROM RAILWAY	-
NO. OF SPAN	2x12.0m + 11x30.0m	1x57.48m BOW STRING GIRDER	6x12.0m +4x20.0m +3x30.0m
RE WALL LENGTH	107.423m	-	65.286m
MAX. RE WALL HEIGHT ABOVE G.L.	4.462m	-	3.829m
RETAINING WALL LENGTH	32.396m	-	28.290m
KERB STONE	30.084m	-	-
TOTAL LENGTH OF APPROACH	525.423m	-	337.097m
TOTAL LENGTH OF RAILWAY	-	57.48m	-
TYPE OF SUPER STRUCTURE	54.0m	BOW STRING GIRDER	
	12.0m	RCC SOLID SLAB (CAST IN SITU)	
	20.0m	PSC I-GIRDER (CAST IN SITU)	
	30.0m	PSC I-GIRDER (CAST IN SITU)	
TYPE OF SUB STRUCTURE	RCC PIER & RCC PIERCAP		
TYPE OF FOUNDATION	PILE FOUNDATION		

NOTES.:

1. ALL DIMENSIONS ARE IN MILIMETERS AND LEVELS IN METERS UNLESS WRITTEN OTHERWISE
2. NO DIMENSIONS SHALL BE SCALED FROM THIS DRAWING, ONLY WRITTEN DIMENSIONS SHALL BE FOLLOWED.
3. THE DIMENSIONS, SECTIONAL DETAILS, CURVE DETAILS ARE TENTATIVE AND MAY BE CHANGED TO SUIT DESIGN REQUIREMENT AND SITE CONDITIONS.
4. DIAMETER, DEPTH & NUMBER OF PILES ARE TANTATIVE AND MAY BE CHANGED AS PER DESIGN.
5. TEST PILE SHALL BE LOAD TESTED BEFORE CASTING OF OTHER MAIN PILES.
6. FOR STRIP SEAL TYPE EXPANSION JOINTS, MORTH, I.R.C & I.S SPECIFICATION SHALL BE USED.
7. ALL OTHER SPECIFICATIONS SHALL BE AS PER MORTH & IRC SPECIFICATION FOR ROAD & BRIDGES.
8. THE APPROACHES WORK SHOULD BE DONE WITH MOST SPECIFICATION.
9. CONCRETE GRADE
   a. PILE M:40
   b. LEVELING COURSE M:15
   c. PIER,ABUTMENT,ABUTMENT CAP, PIER CAP,PILE CAP M:35
   d. PEDESTAL M:45
   e. SEISMIC RESTRAINER M:45
   f. PSC SUPER STRUCTURE M:50, SOLID SLAB M:35
   g. CRASH BARRIER M:40
   h. RETAINING WALL M:35
10. ALL REINFORCEMENT SHALL BE OF Fe-550D (TMT) GRADE WITH FUSION BONDED EPOXY COATING CONFORMING TO IS 1786-2008.
11. CLEAR COVER FOR REINFORCEMENT AS FOLLOWS:
   a. PILE : 75mm
   b. PILE CAP : 75mm
   c. PIER & SUPER STRUCTURE :50mm
9. CRASH BARRIER SHALL BE AS PER LATEST IRC STANDARD.
10. THE STRUCTURE WILL BE DESIGNED AS PER LATEST IRC / IS SPECIFICATIONS FOR "SEVERE" EXPOSURE CONDITION .
11. BED LEVEL, FRL, SHOULD BE VERIFIED BEFORE EXECUTION. ALL THE SETTING OUT DIMENSIONS AND REDUCED LEVEL ETC. SHALL BE VERIFIED AT SITE BEFORE STARTING THE WORK.
12. DESIGN LOADING: 2 LANES OF CLASS A OR 1 LANE OF 70R OR IRC GIRDER IN RAILWAY PORTION.
13. PROPER PROTECTION MEASURES SHALL BE TAKEN WHILE EXECUTING THE WORK NEAR THE RAILWAY TRACK.
14. SAFETY WORK SHOULD BE PROVIDE LIKE PROTECTIVE SCREENS, EARTHING, CAUTION BOARD ETC.
15. IF THERE IS VARIATION OF SOIL STRATA BY MORE THAN 500mm, THE MATTER SHOULD BE BROUGHT TO NOTICE OF DESIGN SECTION.
16. CHECK & VERIFY THE ALIGNMENT BEFORE STARTING EXECUTION WORK.
17. SHAPES AND SIZE OF GIRDERS, BEARINGS, PEDESTALS, ABUTMENTS, PIERS, PIER CAPS, FOOTING ARE TENTATIVE AND ARE SUBJECT TO CHANGE IN FINAL DESIGN AND DRAWING.
18. EXCAVATION FOR ROB WORK SHALL BE DONE ONLY IN PRESENCE OF AUTHORIZED RAILWAY REPRESENTATIVE TO ENSURE THE SAFETY OF RUNNING TRAIN PROPER PRECAUTION SHALL BE TAKEN DURING EXCAVATION OF FOUNDATION NEAR THE TRACK PROPER SHORING SHALL BE DONE TO PROTECT SLOPE FAILURE OF SOIL.
19. 6mm THK. LINER SHALL BE PROVIDED UP TO 2.5m DEPTH.
20. SHOWN LEVELS OF PIERCAP AND PILECAP ARE TENTATIVE, IT MAY CHANGE AS PER FINAL DESIGN.
21. POT-PTFE BEARING SHALL BE USED IN PSC I-GIRDER & ELASTOMARIC BEARING SHALL BE USED IN RCC SLAB .
22. EXTRA WIDENING IN CURVATURE PORTION SHALL BE PROVIDED AS PER TABLE 18 OF IRC 73.
23. PROPOSED ROB IS LOCATED IN SEISMIC ZONE -IV.
24. ACTUAL DEPTH OF FOUNDATION SHALL BE DECIDED BY ENGINEER-IN-CHARGE TO SUIT THE SOIL STRATA MET WITH AT THE SITE. ENGINEER IN CHARGE SHOULD ENSURE THAT SBC OF SOIL AT FOUNDING LEVEL IS MORE THAN BEARING PRESSURE AT THAT LEVEL.
25. WEEP HOLES SHALL BE PROVIDED IN ABUTMENTS AND RETURN WALLS.
26. WEARING COAT SHALL BE 56mm THK (6mm MASTIC + 25mm BC IN TWO LAYERS).
27. SOIL INVESTIGATION WAS CARRIED OUT BY M/S GEO DESIGNS & RESEARCH PVT. LTD AND GEO TECHNICAL REPORT HAS BEEN SUBMITTED VIDE REPORT NO.: 5587-170004.
28. LOAD BEARING CAPACITY OF PILE FOR DIA 1.2 M & FOR (3 TIMES DIAMETER OF PILE) EMBEDDED IN ROCKY STRATA OF PILE ID 382.60 MT.
29. RE WALL PORTION BEARING CAPACITY AT 1m BELOW GL IS 19.65 T/M^2
30. WIND SPEED CONSIDERED IN DESIGN IS 39 M/S.
31. ALL SHARP EDGES OF SQUARE PIER SHALL BR CHAMFERED.
32. PRINCIPAL APPROVAL FOR PROPOSED WORK WAS GIVEN BY GOG VIDE THEIR LETTER NO. :- PRCH/112022/S.F.136/DH.
33. ROB'S DESIGN AND DRAWING SHALL BE CHECKED AND APPROVED BY FIELD OFFICER .
34. BOREHOLES ON PROPOSED ALIGNMENT AT EVERY PIER & ABUTMENT SHALL BE CARRIED OUT BEFORE DESIGN & EXECUTION.

NOTES FOR RE WALL PORTION.:

1. THE MINIMUM GRADE OF CONCRETE SHALL BE RE WALL
   1.1. M-35 FOR T-PANEL
   1.2. M-25 FOR COPING BEAMS
   1.3. M-15 FOR LEVELLING PADS
2. ANY UNSUITABLE FOUNDATION SOILS/ FILLED-UP SOIL SHALL BE REMOVED & REPLACED WITH COMPACTED FILL OF APPROVED QUALITY
3. IN THE REINFORCED & RETAINED ZONE SELECT GRANULAR FILL AS PER SPECIFICATIONS SHALL BE USED.STRICT SUPERVISION DURING PLACING, SPREADING , GRADING & COMPACTION SHALL BE PROVIDED TO ENSURE THIS.
4. CONSTRUCTION JOINT SHALL BE PROVIDED AT THE JUNCTION OF CROSS DRAINAGE STRUCTURE.
5. CUTTING WIDTH OF TECHGRID (TGU) IS 250 mm WITH 8 RIBS.
6. SERVICE ROAD MUST BE CONSTRUCT SIMULTANEOUSLY WITH THE CONSTRUCTION OF RE WALL TO ENSURE MINIMUM REQUIRED EMBEDMENT.

BORE LOG DETAILS (BH - 01)
N=2525667.511 E=687062.656

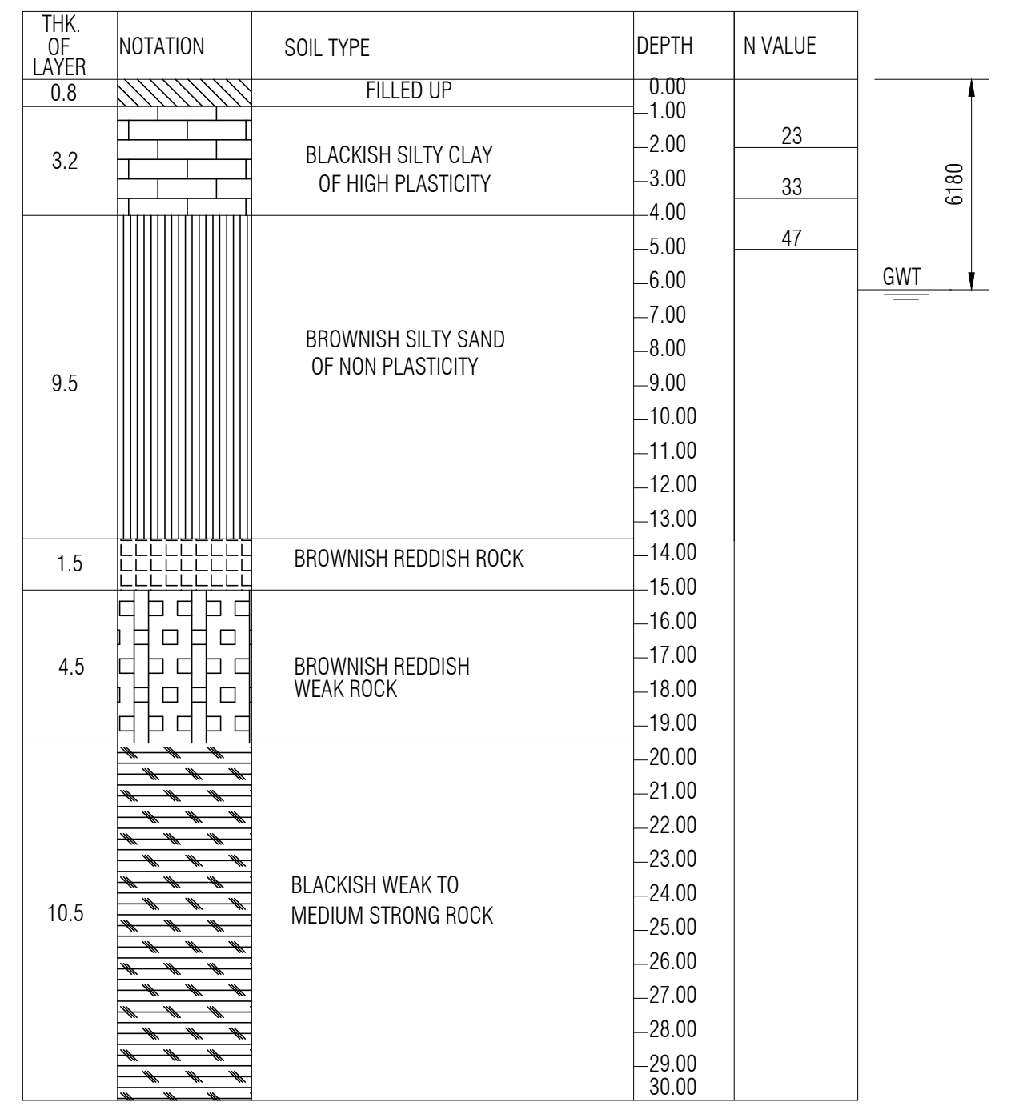
THK. OF LAYER
NOTATION
SOIL TYPE
DEPTH
N VALUE
0.8
FILLED UP
3.2
BLACKISH SILTY CLAY OF HIGH PLASTICITY
9.5
BROWNISH SILTY SAND OF NON PLASTICITY
1.5
BROWNISH REDDISH ROCK
4.5
BROWNISH REDDISH WEAK ROCK
10.5
BLACKISH WEAK TO MEDIUM STRONG ROCK
0.00 1.00 2.00 3.00 4.00 5.00 6.00 7.00 8.00 9.00 10.00 11.00 12.00 13.00 14.00 15.00 16.00 17.00 18.00 19.00 20.00 21.00 22.00 23.00 24.00 25.00 26.00 27.00 28.00 29.00 30.00
23
33
47
6180
GWT

BORE LOG DETAILS (BH - 02)
N=2525535.324 E=687062.656

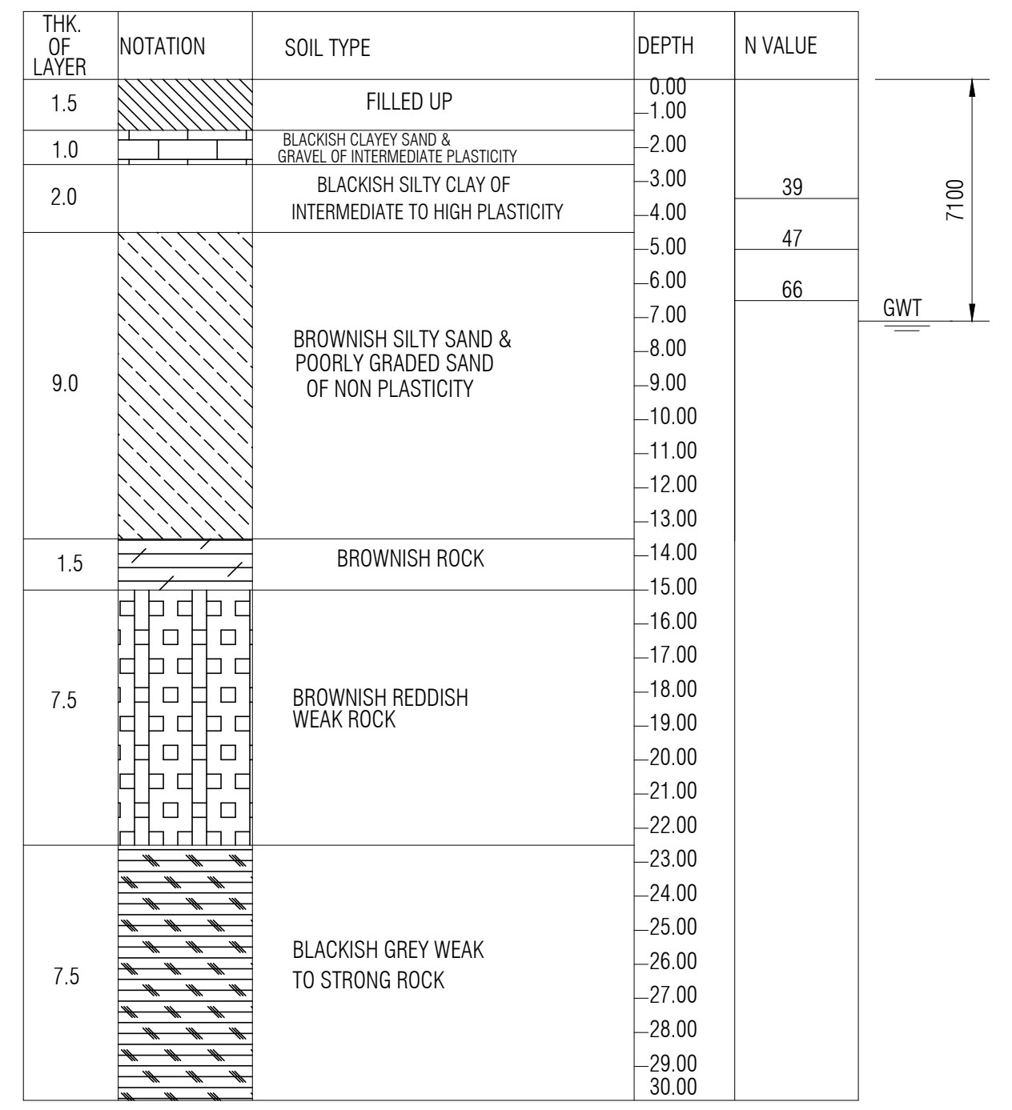
THK. OF LAYER
NOTATION
SOIL TYPE
DEPTH
N VALUE
1.5
FILLED UP
1.0
BLACKISH CLAYEY SAND & GRAVEL OF INTERMEDIATE PLASTICITY
2.0
BLACKISH SILTY CLAY OF INTERMEDIATE TO HIGH PLASTICITY
9.0
BROWNISH SILTY SAND & POORLY GRADED SAND OF NON PLASTICITY
1.5
BROWNISH ROCK
7.5
BROWNISH REDDISH WEAK ROCK
7.5
BLACKISH GREY WEAK TO STRONG ROCK
0.00 1.00 2.00 3.00 4.00 5.00 6.00 7.00 8.00 9.00 10.00 11.00 12.00 13.00 14.00 15.00 16.00 17.00 18.00 19.00 20.00 21.00 22.00 23.00 24.00 25.00 26.00 27.00 28.00 29.00 30.00
39
47
66
7100
GWT

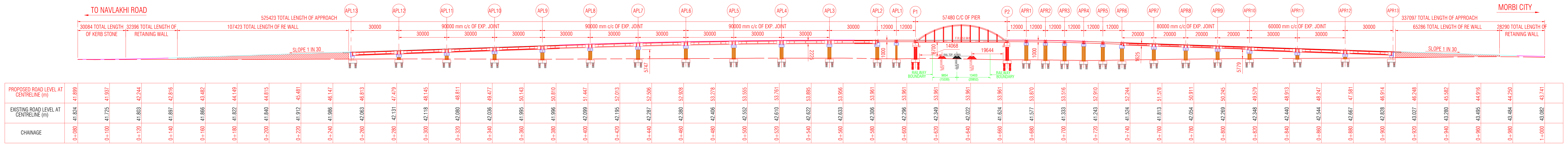
TO NAVLAKHI ROAD
MORBI CITY
APL13 APL12 APL11 APL10 APL9 APL8 APL7 APL6 APL5 APL4 APL3 APL2 APL1 P1 P2 APR1 APR2 APR3 APR4 APR5 APR6 APR7 APR8 APR9 APR10 APR11 APR12 APR13
525423 TOTAL LENGTH OF APPROACH
30084 TOTAL LENGTH OF KERB STONE
32396 TOTAL LENGTH OF RETAINING WALL
107423 TOTAL LENGTH OF RE WALL
90000 mm c/c OF EXP. JOINT
57480 C/C OF PIER
337097 TOTAL LENGTH OF APPROACH
65286 TOTAL LENGTH OF RE WALL
28290 TOTAL LENGTH OF RETAINING WALL
80000 mm c/c OF EXP. JOINT
SLOPE 1 IN 30
PROPOSED ROAD LEVEL AT CENTRELINE (m)
EXISTING ROAD LEVEL AT CENTRELINE (m)
CHAINAGE

SECTIONAL ELEVATION
(SCALE 1:1000)

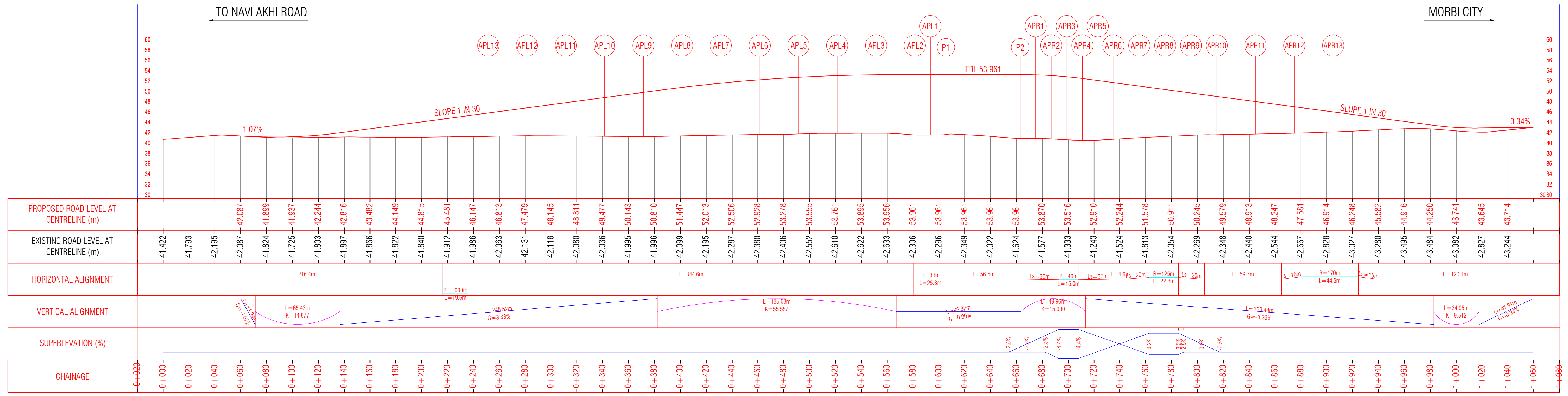
TO NAVLAKHI ROAD
MORBI CITY
APL13 APL12 APL11 APL10 APL9 APL8 APL7 APL6 APL5 APL4 APL3 APL2 APL1 P1 P2 APR1 APR2 APR3 APR4 APR5 APR6 APR7 APR8 APR9 APR10 APR11 APR12 APR13
FRL 53.961
SLOPE 1 IN 30
-1.07%
0.34%
PROPOSED ROAD LEVEL AT CENTRELINE (m)
EXISTING ROAD LEVEL AT CENTRELINE (m)
HORIZONTAL ALIGNMENT
VERTICAL ALIGNMENT
SUPERELEVATION (%)
CHAINAGE

PROFILE
(N.T.S.)

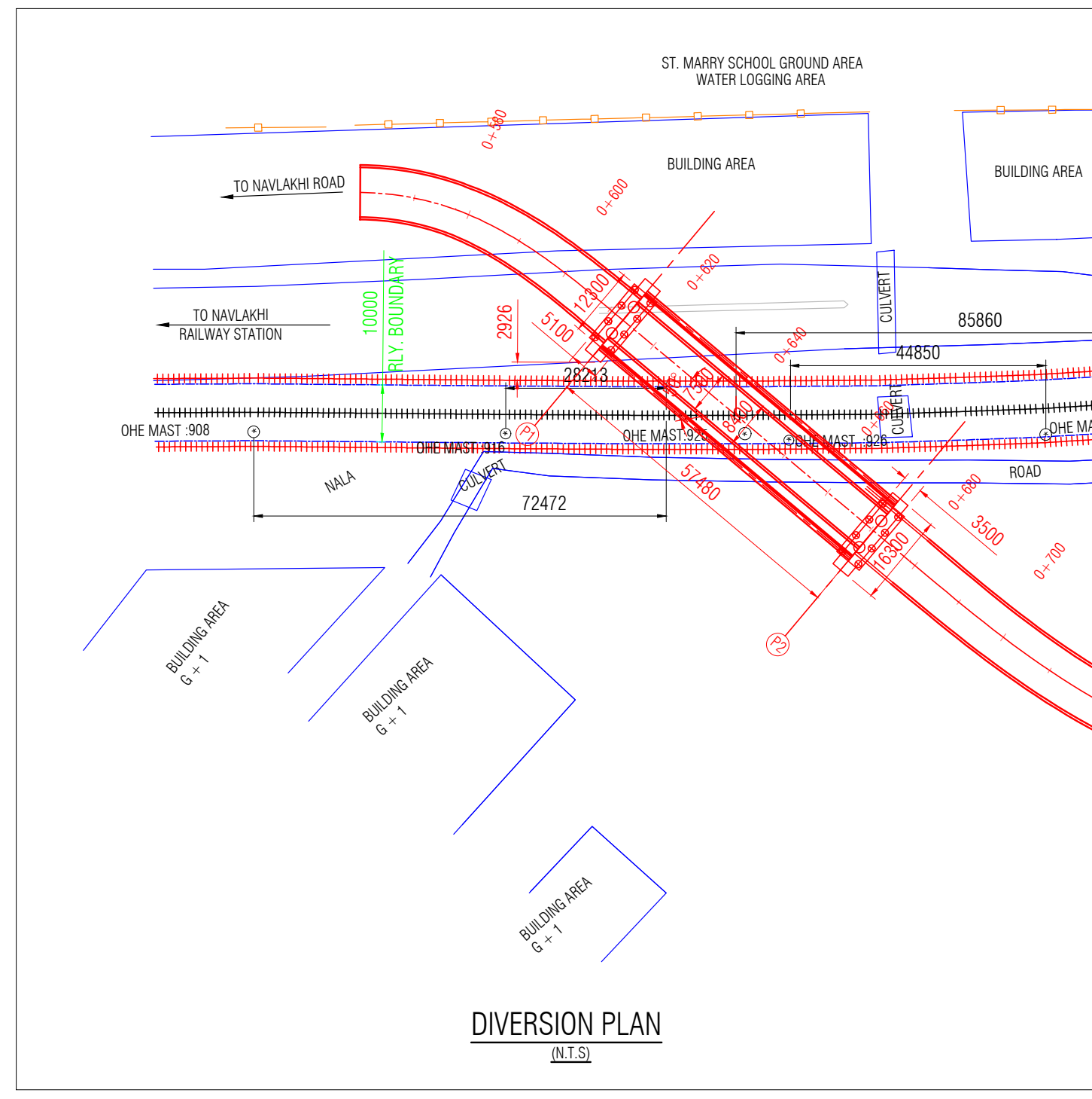
ST. MARRY SCHOOL GROUND AREA
WATER LOGGING AREA
BUILDING AREA
TO NAVLAKHI ROAD
TO NAVLAKHI RAILWAY STATION
TO MORBI RAILWAY STATION
MORBI CITY

DIVERSION PLAN
(N.T.S.)

NOTES FOR DIVERSION

FOR RAILWAY PORTION: EXISTING LC WILL BE USED AS DIVERSION DURING EXECUTION OF ROB.

FOR APPROACH PORTION: 5.5m WIDE SERVICE ROAD SPACE AVAILABLE ON APPROACH PORTION AS SHOWN IN PLAN. SERVICE ROAD USED AS A DIVERSION ROAD DURING EXECUTION OF PROPOSED ROB. AND THE SAME WILL BE UTILIZED AS A PERMANENT SERVICE ROAD AFTER COMPILATION OF WORK.

TBM LIST OF LC-34B MORBI

SRNO.	NORTHING	EASTING	LEVELS	DISCRIPTION
1	2525542.532	687250.242	43.678	TBM
2	2525542.532	687250.242	43.678	TBMS1
3	2525495.76	687321.378	44.141	TBMS2
4	2525244.956	687732.752	45.122	TBMS3
5	2525209.129	687803.504	45.03	TBMS4
6	2525791.313	686836.855	43.327	TBMS5
7	2525901.296	686599.596	43.229	TBMS6
8	2526051.093	686297.079	42.468	TBMS7
9	2526136.177	686092.69	42.631	TBMS8
10	2525701.55	687040.642	43.043	TBMS9
11	2526162.146	686017.171	43.137	TBMT1
12	2525975.398	686421.04	43.343	TBMT2
13	2525677.647	687031.456	44.135	TBMT3

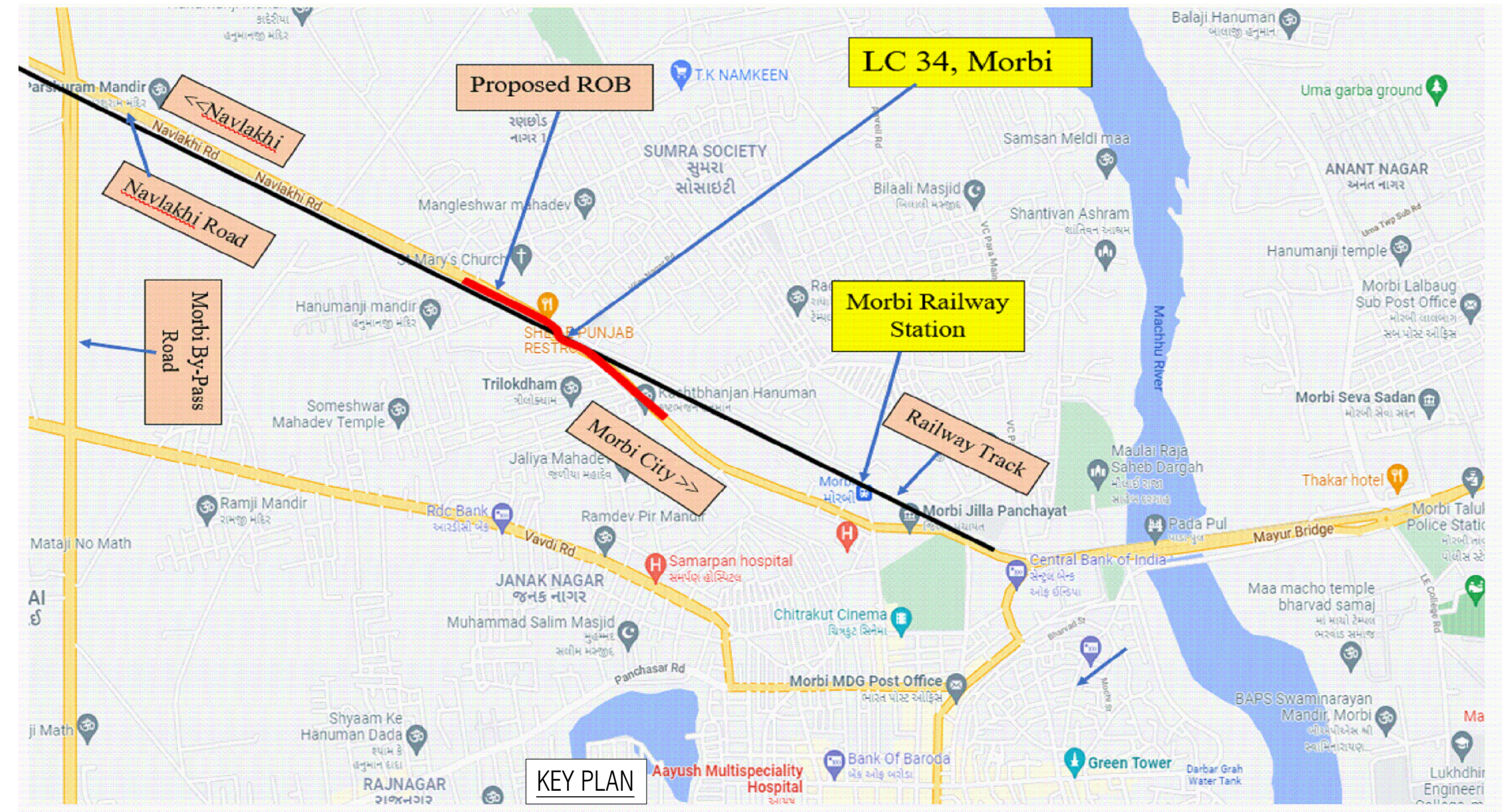
LC 34, Morbi
Proposed ROB
<<Navlakhi
Navlakhi Road
Morbi Railway Station
Morbi City
Railway Track
Navlakhi Rd
T.K NAMKEEN
SUMRA SOCIETY

KEY PLAN

TABLE (TO NAVLAKHI ROAD)

LOCATION	PIER CHAINAGE	F.R.L.	TOP OF PIER CAP		BOTTOM OF PIER CAP	GROUND LEVEL	TOP OF PILE CAP	BOTTOM OF PILE CAP	PILE TERMINATION LVL.
APL1	0+593.424	53.961	52.261		50.661	42.271	41.771	39.971	13.971
APL2	0+581.424	53.961	52.261	51.261	49.661	42.279	41.779	39.979	13.979
APL3	0+551.424	53.938	51.238		49.638	42.628	42.128	40.328	14.328
APL4	0+521.424	53.773	51.073		49.473	42.611	42.111	40.311	14.311
APL5	0+491.424	53.445	50.745		49.145	42.486	41.986	40.186	14.186
APL6	0+461.424	52.955	50.255		48.655	42.386	41.886	40.086	14.086
APL7	0+431.424	52.303	49.603		48.003	42.248	41.748	39.948	13.948
APL8	0+401.424	51.489	48.789		47.189	42.106	41.606	39.806	13.806
APL9	0+371.424	50.524	47.824		46.224	41.975	41.475	39.675	13.675
APL10	0+341.424	49.525	46.825		45.225	42.033	41.533	39.733	13.733
APL11	0+311.424	48.526	45.826		44.226	42.099	41.599	39.799	13.799
APL12	0+281.424	47.526	44.826		43.226	42.134	41.634	39.834	13.834
APL13	0+251.424	46.527	43.827		42.627	42.025	41.525	39.725	13.725

TABLE (MORBI CITY)

LOCATION	PIER CHAINAGE	F.R.L.	TOP OF PIER CAP		BOTTOM OF PIER CAP	GROUND LEVEL	TOP OF PILE CAP	BOTTOM OF PILE CAP	PILE TERMINATION LVL.
APR1	0+674.904	53.917	52.217		50.617	41.603	41.103	39.303	13.303
APR2	0+686.904	53.777	52.077		50.477	41.516	41.016	39.216	13.216
APR3	0+698.904	53.542	51.842		50.242	41.346	40.846	39.046	13.046
APR4	0+710.904	53.21	51.51		49.91	41.224	40.724	38.924	12.924
APR5	0+722.904	52.813	51.113		49.513	41.278	40.778	38.978	12.978
APR6	0+734.904	52.414	50.714	50.314	48.714	41.448	40.948	39.148	13.148
APR7	0+754.904	51.747	49.647		48.047	41.742	41.242	39.442	13.442
APR8	0+774.904	51.081	48.981		47.381	41.999	41.499	39.699	13.699
APR9	0+794.904	50.415	48.315		46.715	42.213	41.713	39.913	13.913
APR10	0+814.904	49.479	47.379	46.779	45.179	42.324	41.824	40.024	14.024
APR11	0+844.904	48.75	46.05		44.45	42.462	41.962	40.162	14.162
APR12	0+874.904	47.75	45.05		43.45	42.635	42.135	40.335	14.335
APR13	0+904.904	46.751	44.051		42.851	42.859	41.978	40.178	14.178

GEO DESIGNS & RESEARCH PVT. LTD. VADODARA
Dhilawala F.S.
CONSULTANT

SUPERINTENDING ENGINEER
GUDC, GANDHINAGAR

CLIENT:- GUJARAT URBAN DEVELOPMENT COMPANY LIMITED
(GUDCL), GANDHINAGAR

NAME OF WORK:-

CONSTRUCTION OF PROP.TWO LANE ROB IN LIEU OF LC NO 34B AT RLY.
KM 29/4-29/5 BETWEEN MORBI - NAVLAKHI STATION ON WKT- NLK
SECTION ON MORBI - NAVLAKHI ROAD. UNDER SWARNIM JAYANTI
MUKHYA MANTRI SAHERI VIKAS YOJANA.
GENERAL ARRANGEMENT DRAWING

TITLE:- PLAN AND ELEVATION FOR ROB IN LIEU OF LC NO:-34B

LOCATION:- BETWEEN BLOCK STATION : MORBI - BARVARA
NAME OF ROAD : MORBI - NAVLAKHI ROAD

CONSULTANT :-
GEO DESIGNS
& RESEARCH (P) LTD.

B/10, KRISHNA INDUSTRIAL ESTATE,
OPP. B.I.D.C. GORWA ESTATE,
VADODARA - 390 016
TELEFAX : 91-265-2290222,2283081
E-Mail : geo_group@yahoo.com
Web Site : www.geogroup.in

PREPARED BY	TARIQ (CAD.ENGINEER) Tariq	DRG NO.	GDBE_2021-22_011/LC-34B/GAD/01 OF 03	Rev.
DESIGNED BY	FAKHRUDDIN DHILAWALA (Sr.ENGINEER) Dhilawala F.S.	DATE	08-06-2026	R0
CHECKED BY	MEHUL PATEL (DESIGN DIRECTOR)	JOB NO.	2021_22_011	

1500 x 594

LONGITUDINAL SECTION FOR PIER (APL1)
SCALE:-1:100

LONGITUDINAL SECTION FOR PIER (APL2)
SCALE:-1:100

CROSS SECTION FOR PIER "APL3 TO APL6"
SCALE:-1:100

CROSS SECTION FOR PIER "APL7 TO APL12"
SCALE:-1:100

LONGITUDINAL SECTION FOR PIER (APR1 & APR5)
SCALE:-1:100

CROSS SECTION FOR PIER "APR6 TO APR9"
SCALE:-1:100

LONGITUDINAL SECTION FOR PIER (APR2 TO APR4)
SCALE:-1:100

CROSS SECTION FOR PIER "APR10 TO APR12"
SCALE:-1:100

PLAN FOR PIER "APL1"
SCALE:-1:100

PLAN FOR PIER "APL2"
SCALE:-1:100

PLAN FOR PIER "APL3 TO APL12 & APR11 TO APR12"
SCALE:-1:100

PLAN FOR PIER "APR1" & "APR5"
SCALE:-1:100

PLAN FOR PIER "APR7 TO APR9"
SCALE:-1:100

PLAN FOR PIER "APR3"
SCALE:-1:100

PLAN FOR PIER "APR4"
SCALE:-1:100

PLAN FOR PIER "APR2"
SCALE:-1:100

PLAN FOR PIER "APR6"
SCALE:-1:100

ELEVATION OF PIER (APR10)
SCALE:-1:100

ELEVATION OF PIER (APR6)
SCALE:-1:100

PLAN FOR PILE CAP FOR PIER (APL1)
SCALE:-1:100

ELEVATION OF PIER (APL1)
SCALE:-1:100

ELEVATION OF PIER (APL2)
SCALE:-1:100

CROSS SECTION FOR ABUTMENT "APR13"
SCALE:-1:100

CROSS SECTION FOR ABUTMENT "APL13"
SCALE:-1:100

ELEVATION OF PIER (APL3,APL6,APL9,APL12)
SCALE:-1:100

ELEVATION OF PIER (APR1 TO APR5)
SCALE:-1:100

ELEVATION OF PIER (APR7 TO APR9)
SCALE:-1:100

PLAN FOR ABUTMENT CAP (APR13)
SCALE:-1:100

PLAN FOR ABUTMENT CAP (APL13)
SCALE:-1:100

ELEVATION OF PIER (APL13 & APR13)
SCALE:-1:100

PLAN FOR PILE CAP WITH 6 Nos. OF PILE
SCALE:-1:100

ELEVATION OF PIER (APL4,APL5,APL7,APL8,APL10,APL11 & APR11)
SCALE:-1:100

RETAINING WALL								
a	b	c	d	e	f	g	H1	H2
mm	mm	mm	mm	mm	mm	mm	mm	mm
450	450	750	500	450	450	450	1000	500

CLIENT:- GUJARAT URBAN DEVELOPMENT COMPANY LIMITED
(GUDCL), GANDHINAGAR

NAME OF WORK:-

CONSTRUCTION OF PROP.TWO LANE ROB IN LIEU OF LC NO 34B AT RLY. KM 29/4-29/5 BETWEEN MORBI - NAVLAKHI STATION ON WKT- NLK SECTION ON MORBI - NAVLAKHI ROAD. UNDER SWARNIM JAYANTI MUKHYA MANTRI SAHERI VIKAS YOJANA.

GENERAL ARRANGEMENT DRAWING

TITLE:- CROSS SECTION DETAIL FOR ROB IN LIEU OF LC NO:-34B

LOCATION:- BETWEEN BLOCK STATION : MORBI - BARVARA
NAME OF ROAD : MORBI - NAVLAKHI ROAD

CONSULTANT :-

GEO DESIGNS
& RESEARCH (P) LTD.

B/10, KRISHNA INDUSTRIAL ESTATE,
OPP. B.I.D.C. GORWA ESTATE,
VADODARA - 390 016
TELEFAX : 91-265-2290222,2283081
E-Mail : geo_group@yahoo.com
Web Site : www.geogroup.in

GEO DESIGNS & RESEARCH PVT. LTD. VADODARA

CONSULTANT

SUPERINTENDING ENGINEER
GUDC, GANDHINAGAR

PREPARED BY	TARIQ (CAD.ENGINEER)	DRG NO.	GDBE_2021-22_011/LC-34B/GAD/02 OF 03	Rev.
DESIGNED BY	FAKHRUDDIN DHILAWALA (Sr.ENGINEER)	DATE	08-06-2026	R0
CHECKED BY	MEHUL PATEL (DESIGN DIRECTOR)	JOB NO.	2021_22_011	

1350 x 594